WorkCentre 7220/7225 Service Documentation

November 9, 2012

ECAT Version

WorkCentre 7220/7225 Service Documentation

Service Documentation

WorkCentre 7220/7225 Service Documentation

705Pxxxxx

ECAT Issue

November 9, 2012

Xerox Private Data

All service documentation is supplied to Xerox external customers for informational purposes only. Xerox service documentation is intended for use by certified, product-trained service personnel only. Xerox does not warrant or represent that it will notify or provide to such customer any future change to this documentation. Customer performed service of equipment, or modules, components, or parts of such equipment may affect whether Xerox is responsible to fix machine defects under the warranty offered by Xerox with respect to such equipment. You should consult the applicable warranty for its terms regarding customer or third-party provided service.

If the customer services such equipment, modules, components or parts thereof, the customer releases Xerox from any and all liability for the customer actions, and the customer agrees to indemnify, defend and hold xerox harmless from any third party claims which arise directly or indirectly for such service.

While Xerox has tried to make the documentation accurate, Xerox will have no liability arising out of any inaccuracies or omissions. Changes are periodically made to this document. Changes, technical inaccuracies, and typographical errors will be corrected in subsequent editions.

Prepared by Content Development & Language Services – North America

800 Phillips Road, Building 218-01A

Webster, New York 14580

ISO9001 and ISO27001 Certified

©2012 Xerox Corporation. All rights reserved. Xerox®, and Xerox and Design® are trademarks of Xerox Corporation in the United States and/or other countries.

Changes are periodically made to this document. Changes, technical inaccuracies, and typographic errors will be corrected in subsequent editions.

CAUTION

This equipment generates, uses and can radiate radio frequency energy, and if not installed and used in accordance with the instructions documentation, may cause interference to radio communications. It has been tested and found to comply with the limits for a Class A computing device pursuant to subpart B of part 15 of FCC rules, which are designed to provide reasonable protection against such interference when operated in a commercial environment. Operation of this equipment in a residential area is likely to cause interference in which case the user, at his own expense, will be required to correct the interference.

Introduction

About this Manual iii
Organization iii
How to Use this Documentation iv
Symbology and Nomenclature v
Translated Warnings x

About this Manual

This Service Manual is part of the multinational documentation system for this copier/printers. The Service Documentation is used in order to diagnose machine malfunctions, adjust components and has information which is used to maintain the product in superior operating condition. It is the controlling publication for a service call. Information on its use is found in the Introduction of the Service Documentation.

This manual contains information that applies to **NASG (XC) and ESG** (XE) copiers.

Service Manual Revision

The Service Manual will be updated as the machine changes or as problem areas are identified.

Organization

The titles of the sections and a description of the information contained in each section are contained in the following paragraphs:

Section 1: Service Call Procedures

This section contains procedures that determine what actions are to be taken during a service call on the machine and in what sequence they are to be completed. This is the entry level for all service calls.

Section 2: Status Indicator RAPs

This section contains the diagnostic aids for troubleshooting the Fault Code and non-Fault Code related faults (with the exception of image quality problems).

Section 3: Image Quality

This section contains the diagnostic aids for troubleshooting any image quality problems, as well as image quality specifications and image defect samples.

Section 4: Repairs/Adjustments

This section contains all the Adjustments and Repair procedures.

Repairs

Repairs include procedures for removal and replacement of parts which have the following special conditions:

When there is a personnel or machine safety issue.

When removal or replacement cannot be determined from the exploded view of the Parts List.

When there is a cleaning or a lubricating activity associated with the procedure.

When the part requires an adjustment after replacement.

When a special tool is required for removal or replacement.

Use the repair procedures for the correct order of removal and replacement, for warnings, cautions, and notes.

Adjustments

Adjustments include procedures for adjusting the parts that must be within specification for the correct operation of the system.

Use the adjustment procedures for the correct sequence of operation for specifications, warnings, cautions and notes.

Section 5: Parts Lists

This section contains the Copier/Printer Parts List.

Section 6: General Procedures/Information

This section contains General Procedures, Diagnostic Programs, and Copier/Printer Information.

Section 7: Wiring Data

This section contains drawings, lists of plug/jack locations, and diagrams of the power distribution wire networks in the machine. Block Schematic Diagrams are found in pdf format in the SGS.

How to Use this Documentation

The Service Call Procedures in Section 1 describe the sequence of activities used during the service call. The call **must** be entered using these procedures.

Use of the Block Schematic Diagrams

Block Schematic Diagrams (BSDs) are included in Section 7 (Wiring Data) of the SGS. The BSDs show the functional relationship of the electrical circuitry to any mechanical, or non-mechanical, inputs or outputs throughout the machine. Inputs and outputs such as motor drive, mechanical linkages, operator actions, and air flow are shown. The BSDs will provide an overall view of how the entire subsystem works.

It should be noted that the BSDs no longer contain an Input Power Block referring to Chain 1. It will be necessary to refer to the Wirenets in order to trace a wire back to its source.

Symbology and Nomenclature

The following reference symbols are used throughout the documentation.

Warnings, Cautions, and Notes

Warnings, Cautions, and Notes will be found throughout the Service Documentation. The words **WARNING** or **CAUTION** may be listed on an illustration when the specific component associated with the potential hazard is pointed out; however, the message of the **WARNING** or **CAUTION** is always located in the text. Their definitions are as follows:

WARNING

Do not perform repair activities with the power on or electrical power supplied to the machine. The machine could activate and cause serious personal injury when the power is on or electrical power is supplied.

DANGER: Ne pas effectuer de dépannage avec le contact principal activé ou avec l'alimentation électrique appliquée à la machine: celle-ci pourrait démarrer et causer de graves blessures.

AVVERTENZA: Non effettuare alcuna riparazione con la macchina accesa o con l'alimentazione elettrica inserita. La macchina potrebbe avviarsi all'improvviso e causare gravi ferite.

VORSICHT: Es dürfen keine Reparaturarbeiten durchgeführt werden, solange das Gerät eingeschalten oder mit der Stromquelle verbunden ist. Das Gerät kann u.U in den Aktiv-Zustand übergehen und somit erhebliche körperliche Schäden verursachen.

AVISO: No realice reparaciones con la máquina encendida o conectada a la corriente. La máquina podría activarse y ocasionar daños personales graves.

CAUTION

A Caution is used whenever an operating or maintenance procedure, a practice, condition, or statement, if not strictly observed, could result in damage to the equipment.

NOTE: *A Note is used whenever it is necessary to highlight an operating or maintenance procedure, practice, condition, or statement.*

Machine Safety Icons

The following safety icons are displayed on the machine:

WARNING

Use extreme care when replacing the Raster Output Scanner (ROS) or touching the high voltage lead. Discharge the laser assembly by touching the high voltage lead to the machine frame. The ROS utilizes a laser assembly that stores a high voltage charge after the power has been removed and represents a shock hazard that could cause serious personal injury if not discharged.

DANGER: Faire très attention lors du changement du générateur de balayage (ROS) ou lors de la manipulation du câble de haute tension. Décharger le système laser en touchant le câble HT au bâti machine: le ROS utilise un système laser qui retient une haute tension après la coupure de l'alimentation, représentant un risque de choc et de graves blessures.

AVVERTENZA: Fare estrema attenzione nel sostituire il Raster Output Scanner (ROS) o nel toccare il cavo di alta tensione. Scaricare il complessivo laser collegando il cavo di alta tensione col telaio della macchina. Il ROS utilizza un complessivo laser che ritiene una carica di alta tensione dopo il taglio dell'alimentazione con conseguente grave pericolo di scossa elettrica e serie ferite.

VORSICHT: Beim Ersetzen der Lasereinheit (ROS) und beim Umgang mit Hochspannungsleitern ist äußerste Vorsicht geboten. Die Lasereinheit muss durch Berühren des Hochspannungsleiters mit dem Gehäuse des Geräts entladen werden. Nach Betrieb der Lasereinheit (ROS) bleibt immer eine Hochspannungsladung zurück, welche ein hohes Elektroschockrisiko darstellt. Äußerste Vorsicht ist geboten.

AVISO: Use extrema precaución para sustituir el Escáner de salida ráster (ROS) o tocar el cable de alto voltaje. Descargue el sistema láser tocando el cable de alto voltaje del bastidor de la máquina. El ROS utiliza un sistema láser que retiene carga de alto voltaje después de interrumpir la alimentación de energía y representa un grave peligro que puede ocasionar daños personales graves si no se descarga.

WARNING

Do not defeat or electrically bypass the ROS Safety Interlock Switch for any reason. The ROS emits an undetectable laser beam that could cause serious permanent damage to the eyes if directly viewed or viewed from a surface that may have reflected the laser beam.

DANGER: Ne pas shunter le contact de sécurité du ROS, quelle que soit la raison. Le ROS émet un rayon laser indétectable qui peut causer de graves blessures permanentes aux yeux s'il est regardé directement ou par le biais d'une surface qui le réfléchit.

AVVERTENZA: Non ostacolare o bypassare elettronicamente l'interruttore blocco di sicurezza ROS per nessun motivo. Il ROS emette un raggio laser invisibile che può causare gravi ferite permanenti agli occhi se viene guardato direttamente o attraverso una superficie riflettente.

VORSICHT: Den ROS (Rasterausgabescanner)-Sicherheitssperrschalter auf keinen Fall vernichten oder elektronisch umgehen. Der ROS sondert einen nicht feststellbaren Laserstrahl ab, der irreparable Augenschäden verursachen kann, wenn direkt oder über eine Spiegelfläche hineingesehen wird.

AVISO: No intente modificar o desviar electrónicamente el interruptor de seguridad por ningún motivo. El ROS emite un rayo láser que no se puede detectar, que podría puede causar grave daño permanente a los ojos si se lo mira directamente o desde una superficie que refleja el rayo láser.

Figure 1 Laser Hazard Symbol

Laser Hazard Statement

DANGER INVISIBLE LASER RADIATION WHEN OPEN. AVOID DIRECT EXPOSURE TO BEAM.

CAUTION

The use of controls or adjustments other than those specified in the Laser Safety Training Program may result in an exposure to dangerous laser radiation.

For additional information, review the Laser Safety Training program.

An arrow points to the location to install, to gain access to, or to release an object.

Figure 2 Customer Access Label

This symbol indicates that a surface can be hot. Use caution when reaching in the machine to avoid touching the hot surfaces.

Figure 3 Heated Surface Label

Danger label indicates where electrical currents exist when the machine is closed and operating. Use caution when reaching in the machine.

Figure 4 Shock Hazard Label

These symbols indicate components that may be damaged by Electrostatic Discharge (ESD).

Figure 5 ESD warning Label

Electrostatic Discharge (ESD) Field Service Kit

The purpose of the ESD Protection Program is to preserve the inherent reliability and quality of electronic components that are handled by the Field Service Personnel. This program is being implemented now as a direct result of advances in microcircuitry technology, as well as a new acknowledgment of the magnitude of the ESD problem in the electronics industry today.

This program will reduce Field Service costs that are charged to PWB failures. Ninety percent of all PWB failures that are ESD related do not occur immediately. Using the ESD Field Service Kit will eliminate these delayed failures and intermittent problems caused by ESD. This will improve product reliability and reduce callbacks.

The ESD Field Service Kit should be used whenever Printed Wiring Boards or ESD sensitive components are being handled. This includes activities like replacing or reseating of circuit boards or connectors. The kit should also be used in order to prevent additional damage when circuit boards are returned for repair.

The instructions for using the ESD Field Service Kit can be found in ESD Field Service Kit Usage in the General Procedures section of the Service Documentation.

Illustration Symbols

Figure 6 shows symbols and conventions that are commonly used in illustrations.

REFERENCE SYMBOLOGY

Test data, notes, adjustments, and parts lists are supportive to the BSD and RAP information. This supportive data is referenced, using the symbols shown in the following paragraphs:

TEST DATA

TD

This symbol appears on the BSD whenever a test data reference is necessary in order to verify the presence of a signal.

NOTES

2

This symbol is used to refer to notes. The notes normally appear on the same page.

ADJUSTMENTS

This symbol refers to adjustments on the Service Data Section.

PARTS LISTS

PL2-XX

This symbol refers to a parts list on the Service Data Section.
PL indicates that this is a parts list reference and, in this example, the exploded view drawing is on Parts List 2-XX. Parts list reference appear on the BSDs next to all replaceable parts shown on the diagram.

TEST POINTS

TP1

This symbol is used to identify a test point/test hole available for measuring a signal.

BSD GRAPHICS

A A

This symbol indicates the continuation of a signal line in a vertical direction.

This symbol indicates the continuation of a signal line in a horizontal direction.

This symbol indicates the direction of signal flow.

This symbol indicates a feedback signal.

This symbol is used to show a twisted pair of wires.

[X-XXX]

This symbol placed above a signal name on a BSD indicates the input or output component control code for that signal.

[X-XXX] [X-XXX]

This symbol placed above a signal name on a BSD indicates that two component control codes (an output and an input) are required to check that signal.

[X-XXX/X-XXX]

This symbol placed above a signal name on a BSD indicates component control codes for two components, in this example, two Paper Trays. The left hand code is for Paper Tray 1, and the right hand code is for Paper Tray 2.

X-XXX

Fault Codes Indicator shown on BSD.

1

The Flag symbol indicates a reference point into a Circuit Diagram from a RAP. Instructions will be given to check for an open circuit, a short circuit, or an intermittent condition

Figure 6 Illustration Symbols

Signal Nomenclature

Refer to Figure 7 for an example of Signal Nomenclature used in Circuit Diagrams and BSDs.

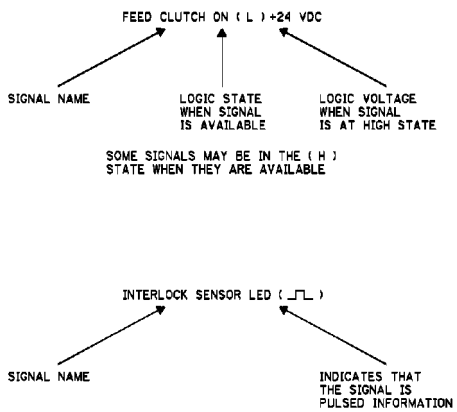

Figure 7 Signal Nomenclature

Voltage Measurement and Specifications

Measurements of DC voltage must be made with reference to the specified DC Common, unless some other point is referenced in a diagnostic procedure. All measurements of AC voltage should be made with respect to the adjacent return or ACN wire.

Table 1 Voltage Measurement and Specifications

VOLTAGE	SPECIFICATION
INPUT POWER 220 V	198 VAC TO 242 VAC
INPUT POWER 100 V	90 VAC TO 135 VAC
INPUT POWER 120 V	90 VAC TO 135 VAC
+5 VDC	+4.75 VDC TO +5.25 VDC
+24 VDC	+23.37 VDC TO +27.06 VDC

Logic Voltage Levels

Measurements of logic levels must be made with reference to the specified DC Common, unless some other point is referenced in a diagnostic procedure.

Table 2 Logic Levels

VOLTAGE	H/L SPECIFICATIONS
+5 VDC	H= +3.00 TO +5.25 VDC L= 0.0 TO 0.8 VDC
+24 VDC	H= +23.37 TO +27.06 VDC L= 0.0 TO 0.8 VDC

DC Voltage Measurements in RAPs

The RAPs have been designed so that when it is required to use the DMM to measure a DC voltage, the first test point listed is the location for the red (+) meter lead and the second test point is the location for the black meter lead. For example, the following statement may be found in a RAP:

There is +5 VDC from TP7 to TP68.

In this example, the red meter lead would be placed on TP7 and the black meter lead on TP68.

Other examples of a statement found in a RAP might be:

- **There is -15 VDC from TP21 to TP33.**
- **-15 VDC is measured between TP21 and TP33.**
- In these examples, the red meter lead would be placed on TP21 and the black meter lead would be placed on TP33.
- If a second test point is not given, it is assumed that the black meter lead may be attached to the copier frame.

Translated Warnings

Translated Warnings are located at point of need in the Service Documentation.

1 Service Call Procedures

Service Call Procedures 1-3
Initial Actions 1-3
Call Flow 1-4
Detailed Maintenance Activities (HFSI) 1-6
Cleaning Procedures 1-7
Final Actions 1-7

Service Call Procedures

Service Strategy

The service strategy for the WorkCentre Copier/Printers is to perform any High Frequency Service Item (HFSI) actions before attempting to repair any problems. Some problems will be corrected by this strategy without the need to diagnose them. The Repair Analysis Procedures (RAPs) will be used for any remaining problems.

Problems that occur in the Basic Printer mode will be repaired before problems that occur when using the accessories.

Image Quality problems should be repaired after all other problems are repaired.

Service Call Procedures

The **Service Call Procedures** are a guide for performing any service on this machine. The procedures are designed to be used with the Service Manual. Perform each step in order.

Initial Actions

The Initial Actions gather information about the condition of the machine and the problem that caused the service call.

Call Flow

Call Flow summarizes the sequence of the Service Call Procedures.

Detailed Maintenance Activities

This section provides the information needed to perform the Detailed Maintenance Activities (HFSI) High Frequency Service Item (HFSI) actions.

Cleaning Procedures

The cleaning procedures list what needs to be cleaned at each service call.

Final Actions

The Final Actions will test the copier/printer and return it to the customer. Administrative activities are also performed in the Final Actions.

Initial Actions

Purpose

The purpose of the Initial Action section of the Service Call Procedures is to determine the reason for the service call and to identify and organize the actions which must be performed.

Procedure

1. Gather the information about the service call and the condition of the copier/printer.
   a. Question the operator(s). Ask the customer if the problems are related to Xerox Secure Access. Ask about the location of most recent paper jams. Ask about the image quality and the copier/printer performance in general, including any unusual sounds or other indications.
   b. After informing the customer, disconnect the machine from the customer's network.
   c. Check that the power cords are in good condition, correctly plugged in the power source, and free from any defects that would be a safety hazard. Repair or replace the power cords as required. Check that the circuit breakers are not tripped.
   d. If the problem is Cover or Interlock related, or if there are frequent Machine Status Messages that cannot be reset by performing the required action go the Unresettable Machine Status Messages RAP.
   e. If the problem is completely blank output in all modes of operation go the Output is Blank in All Modes RAP.
   f. If the machine appears to be inoperative, go to Call Flow and repair the problem. Then continue below.
   g. Inspect any rejected copies. Inquire as to, or otherwise determine, the paper quality and weight. The specified papers for optimum image quality with this machine are 24 lb. Xerox Color Xpressions Plus (XC) or 90 gsm Colortech + (XE). Look for any damage to the copies, oil marks, image quality defects, or other indications of a problem.
   h. Record the billing meter readings. The meters are diplayed on the UI by pressing: **Machine Status** Button, **Billing Information** Tab.
   i. Enter Service Rep. Mode (UI Diagnostic (CSE) Mode).

      NOTE: *If a fault occurs while performing a diagnostics procedure, go to that fault code RAP and repair the fault. Return to Diagnostics and continue with the dC procedure that you were performing.*

   j. Using the usage information gathered in step g, determine what HSFI action may required based on the customer output volume. Refer to the Detailed Maintenance Activities (HFSI) section for the detailed HSFI information. Record any items that may require action.
   k. Access UI Diagnostics (UI Diagnostic (CSE) Mode). Select the Service Info tab and use dC120 Fault Counters and dC122 Fault History to display fault information. Classify this information into categories and record the appropriate fault codes:

      Information that is related to the problem that caused the service call.

      Information that is related to secondary problems.

      Information that does not require action, such as a single occurrence of a problem.
   l. Check the Service Log for any recent activities that are related to the problem that caused the service call or any secondary problem.

2. Perform any required HSFI activities identified above. Refer to Detailed Maintenance Activities (HFSI).
3. Exit diagnostics. Try to duplicate the problem by running the same jobs that the customer was running.
4. Go to Call Flow.

Call Flow

This procedure should be performed at every service call.

Initial Actions

- Ask the operator about the problem. If the problem appears to be related to operator error, or an attempt to perform a job outside of the machine specifications, assist the customer in learning the correct procedure.

  NOTE: *IIf the problem is Cover or Interlock related, or if there are frequent Machine Status Messages that cannot be reset by performing the required action go the Unresettable Machine Status Messages RAP.*

  If the problem is completely blank output in all modes of operation go the Output is Blank in All Modes RAP.

Procedure

NOTE: *If customers cannot access machine functions because Xerox Secure Access is not functioning properly go to the OF 13-1 RAP to repair the problem, then return here and continue.*

If customers cannot access machine functions because the Common Access Card featureis not functioning properly go to GP 21 to determine the problem, then return here and continue.

If a message such as 'Reinsert an improperly seated consumable" or "Replace any with error" is displayed on the UI, go to the Toner CRUM Mismatch RAP.

Switch on the Main Power. **The machine comes to a Ready condition.**

Y **N**

Go to the Machine Not Ready.

The reported problem occurs in Print Mode only.

Y **N**

Place the Color Test Pattern on the Document Glass. Make a copy from each paper tray. **The Copier/Printer can copy from all trays.**

Y **N**

Access UI Diagnostics (UI Diagnostic (CSE) Mode). Select the Service Info tab and use dC120 Fault Counters and dC122 Fault History to display fault information. **A fault code related to the problem is displayed.**

Y **N**

The problem is related to a specific paper tray (for example, erroneous "Tray X out of Paper" message).

Y **N**

For intermittent problems, Go to GP 23.

Access UI Diagnostics (UI Diagnostic (CSE) Mode). Select the Daignostics tab Use dC612 Print Test Patterns and Print Test Pattern 1 from the suspect tray. When a fault is declared, go to the RAP for that fault code.

Go to the RAP for the displayed fault.

Place two originals into the DADF and program a duplex job. **The Copier/Printer can copy from the DADF.**

A

A

Y N

Access UI Diagnostics (UI Diagnostic (CSE) Mode). Select the Service Info tab and use dC120 Fault Counters and dC122 Fault History to display fault information. **A fault code related to the problem is displayed.**

Y N

Check the DADF Document Sensors for debris or damage. Check the mechanical drives and Feed Rolls for contamination, wear, damage, or binding.

Go to the RAP for the displayed fault code.

Check the image quality in the Basic Copier Mode:

- Select a tray that is loaded with 11 X 17 or A3 paper.
- Select the following parameters (Table 1):

Table 1 Basic Copier Mode Settings

Tab	Item Name	Sub-Item Name	Setting
Copy	Output Color	-	**Auto Detect**
Copy	Reduce/Enlarge	-	**Auto**
Image Quality	Original Type	Content Type	**Photo and Text**
Image Quality	Original Type	How Original was Produced	**Printed**
Image Quality	Color Presets	-	**Off**
Image Quality	Image Options	Lighten/Darken	**Normal**
Image Quality	Image Options	Sharpness	**Normal**
Image Quality	Image Options	Saturation	**Normal**
Image Quality	Color Balance	-	**Normal**
Image Quality	Image Enhancement	Background Suppression	**Off**
Image Quality	Image Enhancement	Contrast: Manual Contrast	**Normal**
Layout Adjustment	Image Shift	-	**Off**

- Run four copies of the Color Test Pattern.

The Image Quality of the copies produced is acceptable.

Y N

Go to the Image Quality Entry RAP.

Go to Final Actions.

The problem occurs in all print jobs.

Y N

If the problem is specific to a single application or group of applications, ensure that current drivers are loaded. If the problem persists, escalate the call to the Customer Support Center.

Go to GP 7 Network Printing Simulation and send a print job. **An acceptable print is produced.**

Y N

- verify machine settings

B

B

- reload system software
- replace the Hard Drive (PL 35.2).
- replace the SBC PWB (PL 35.2).

The problem is in the customer network or the setup. Check the following:

- Ensure that the Static IP/DHCP setting matches the customer's network
- Verify that the IOT IP address is correct.
- When resolved, go to Final Actions.

Detailed Maintenance Activities (HFSI)

Procedure

1. Clean the ADC Sensor and ROS window on every call.
2. Enter Service Rep. Mode (UI Diagnostic (CSE) Mode).
3. Use dC135 HFSI Counters and the usage information gathered in Initial Actions to determine which HFSI items require replacement.

NOTE: *TBD - verify this for Javelin - need SME input - Several service liems in Table 1 are Customer Replaceable Units (CRUs). Counters are reset automatically upon installation.*

4. Perform the Service Actions in Table 1 for any High Frequency Service Item (HFSI) counters that are over threshold or approaching the threshold. Using the customer's output volume numbers (high, medium, or low volume), evaluate which HFSI actions should be performed now to avoid an additional service call in the near future.
5. Refer to Cleaning Procedures for detailed cleaning instructions.
6. After servicing an HFSI, enter UI Diagnostic (CSE) Mode and select either the **Service Info** or the **Maintenance** tab, then select dC135.
7. Select the appropriate item(s) from the table and press the **Reset Counter** button. Follow the directions in the window to reset the counters.
8. Threshold values can be changed if required by selecting the **Edit Life** button and entering the new count.

Table 1 TBD items need input from SME High Frequency Service Items

Name	Service Action to be performed	Threshold
Second Bias Transfer Roller	Replace the 2nd BTR Unit (2nd BTR CRU) (PL 6.1).	200KPV (calculated value - A4L = 1 count/sheet, 8.5x11 =.96 counts/sheet, 11x17 = 1.93 counts/sheet, A3 = 2 counts/sheet, etc.)
Fuser	Replace the Fuser (Fuser CRU) (PL 7.1)	100KPV (calculated value - A4L = 1 count/sheet, 8.5x11 =.96 counts/sheet, 11x17 = 1.93 counts/sheet, A3 = 2 counts/sheet, etc.)
Tray 1 Feed Roll	Replace the Feed, Nudger, and Retard Rolls (PL 9.5).	300K sheets fed
Tray 2 Feed Roll	Replace the Feed, Nudger, and Retard Rolls (PL 9.5).	300K sheets fed
Tray 3 Feed Roll	Replace the Feed, Nudger, and Retard Rolls (PL 10.5).	300K sheets fed
Tray 4 Feed Roll	Replace the Feed, Nudger, and Retard Rolls (PL 10.5).	300K sheets fed
MSI Feed Roll	Replace the Feed, Nudger, and Retard Rolls (PL 13.2).	50K sheets fed
IBT Belt Assembly	Replace the IBT Assembly (Transfer Belt CRU) (PL 6.2).	200KPV (calculated value - A4L = 1 count/sheet, 8.5x11 =.96 counts/sheet, 11x17 = 1.93 counts/sheet, A3 = 2 counts/sheet, etc.)
Fuser Filter	TBD - this item is not listed in PL	TBD KPV These parameters must be redone when (if) if the part information is supplied (calculated value - A4L = 1 count/sheet, 8.5x11 =.96 counts/sheet, 11x17 = 1.93 counts/sheet, A3 = 2 counts/sheet, etc.)
DADF Feed Count	Replace the Feed, Nudger Rolls (PL 51.12) and the Retard Roll (PL 51.14). TBD - This item is not listed in the HFSI table in the machine. Either remove or update information	200K sheets fed
Lamp On Time	Replace the LED Lamp PWB (PL 1.4) TBD - This item is not listed in the HFSI table in the machine. Either remove or update information	Lamp life: 2000 hours.Count increment = 1 sec.Max count value = 7200K sec. or moreCounts all on operations (e.g. AGOC, lamp testing)
Lamp On Count	Replace the LED Lamp PWB (PL 1.4) TBD - This item is not listed in the HFSI table in the machine. Either remove or update information	Lamp life: 6000K timesCount increment = 1 timeMax count value = 6000K times or moreCounts all on operations (e.g. AGOC, lamp testing)

Cleaning Procedures

Purpose

The purpose is to provide cleaning procedures to be performed at every call.

Procedure

CAUTION

Do not use any solvents unless directed to do so by the Service Manual.

General Cleaning

Use a dry lint free cloth or a lint free cloth moistened with water for all cleaning unless directed otherwise by the Service Manual. Wipe with a dry lint free cloth if a moistened cloth is used.

1. **Feed Components (Rolls and Pads)**

   Use a dry lint free cloth or a lint free cloth moistened with water. Wipe with a dry lint free cloth
2. **Toner Dispense Units**

   Vacuum the Toner Dispense units.
3. **Jam Sensors**

   Clean the sensors with a dry cotton swab.
4. **IBT Cleaning**

   Check the Transfer Belt surface and wipe with a dry lint free cloth. If the surface is excessively dirty, replace the Transfer Belt (PL 6.2).

   Do not rub the IBT Cleaning Blade. If it is necessary to clean the blade, use a soft brush or dry swab to brush away contamination. Rubbing will remove the protective coating on the blade.
5. **Fuser Components** (best cleaned when hot)

   Switch off the power. Allow the Fuser to cool enough so that it does not present a burn hazard.

   Wipe with a lint free cloth.
6. **Scanner**
   a. Switch off the power.
   b. Using the optical Cleaning Cloth, clean the front and rear of the Document Glass, Document Cover, White Reference Strip, Reflector, and Mirror.
   c. Clean the Exposure Lamp with a clean cloth.
   d. Clean the Lens with Lens and Mirror Cleaner and lint free cloth.
7. **DADF**

   Check the paper path for debris or damage. Clean the rolls with a clean cloth and Film Remover as required.
8. **Finisher**

   Check the paper path for debris or damage. Clean the Finisher with a dry lint free cloth.

Final Actions

Purpose

The intent of this procedure is to be used as a guide to follow at the end of every service call.

Procedure

1. Ensure that the exterior of the copier/printer and the adjacent area are clean. Use a dry cloth or a cloth moistened with water to clean the copier/printer. Do not use solvents.
2. Check the supply of consumables. Ensure that an adequate supply of consumables is available according to local operating procedures.
3. Conduct any operator training that is needed. Ensure that the operator understands that the Automatic Gradation Adjustment procedure in the User Guide should be used to calibrate the colors.
4. Complete the Service Log.
5. Perform the following steps to make a copy of the Demonstration Original for the Customer:
   a. Load Tray 1 with 8.5 x 11” (A4) or 11 x 17” (A3) paper.
   b. Place the Color Test Pattern on the glass with the short edge of the test pattern registered to the left edge of the glass. Select Tray 1 and make a single copy.
   c. Print out the Machine Settings (Configuration Report). Store this report with the service log in Tray 1.
   d. Ask the customer to verify the Print and Scan functions.
   e. Present the copies to the customer.
6. Reconnect the machine to the customer network. Verify function.
7. Issue copy credits as needed.
8. Discuss the service call with the customer to ensure that the customer understands what has been done and is satisfied with the results of the service call.

2 Status Indicator RAPs

Chain 002 - Controller (UI/EWS)

302-302 Flash Rewrite Failure 2-7
302-306 Flash Erase Failure 2-7
302-308 Flash Download Failure 2-8
302-312 Application SW Checksum Failure 2-8
302-315 Service Registry Bad or Corrupted Data 2-9
302-316 SRS Returns Invalid or Missing Data 2-9
302-317 LUI Gets No Response From SRS 2-10
302-320 UI Data Time Out Error 2-10
302-321 XEIP Browser Dead 2-11
302-380 UI Communication Fault 2-11
302-381 UI Communication Fault 2-12
302-390 Config Services Not Stable 2-12

Chain 003 - Controller

303-306 Downgrade Not Permitted 2-13
303-307 Upgrade Synchronization Failure 2-13
303-316 CCM Cannot Communicate with IOT 2-14
303-317 IOT NVM Save Failure 2-14
303-318 IOT NVM Init Failure 2-15
303-319 IOT NVM Restore Failure 2-15
303-320 Incompatible Product Type 2-16
303-324 Software Upgrade File Transfer Failure 2-16
303-325 Wall Clock Timeout During Power Up 2-17
303-326 Upgrade is not Required 2-17
303-327 Upgrade Failure 2-18
303-329 Upgrade Request During Diagnostics 2-18
303-330 Upgrade Request During Active Security Feature 2-19
303-331 Communication Fault With NC 2-19
303-332 NC Communications Timeout 2-20
303-338 Main Controller Has Been Reset 2-20
303-346 UI Communication Timeout 2-21
303-347 UI Communication Fault 2-21
303-355 CCM POST Failure During NVM Test/NVM Battery Dead 2-22
303-380 Distribution PWB Missing or Disconnected 2-22
303-390 Upgrade Automation Failed 2-23
303-398 SOK 1 Not Detected 2-23
303-399 SOK 1 Not Detected 2-24
303-401 Basic FAX Not Detected or Confirmed 2-24
303-403 Extended FAX Not Detected or Confirmed 2-25
303-417 Incompatible FAX SW Detected at Power Up 2-25
303-777 Power Loss Detected 2-26
303-788 Failed to Exit Power Save Mode 2-26
303-790 Timezone File Cannot be Set 2-27

Chain 005 - DADF

305-121 DADF Feed Out Sensor On Jam 2-29
305-122 DADF Simplex/Side 1 Pre Registration Sensor On Jam 2-30
305-123 DADF Simplex/Side 1 Registration Sensor On Jam 2-31
305-125 DADF Registration Sensor Off Jam 2-32
305-131 DADF Invert Sensor On Jam (During Invert) 2-32
305-132 DADF Invert Sensor On Jam 2-33
305-134 DADF Inverter Sensor Off Jam (During Invert) 2-33
305-135 DADF Side 2 Pre Registration Sensor On Jam 2-34
305-136 DADF Side 2 Registration Sensor On Jam 2-34
305-139 DADF Invert Sensor Off Jam 2-35
305-145 DADF Registration Sensor Off Jam (Invert) 2-35
305-146 DADF Pre Registration Sensor Off Jam 2-36
305-147 DADF Pre Registration Sensor Off Jam (Invert) 2-36
305-194 Size Mismatch Jam On SS Mix-Size 2-37
305-196 Size Mismatch Jam On No Mix-Size 2-37
305-197 Prohibit Combine Size Jam 2-38
305-198 Too Short Size Jam 2-38
305-199 Too Long Size Jam 2-39
305-210 DADF Download Fail 2-39
305-280 DADF EEPROM. Fail 2-40
305-305 DADF Feeder Cover Interlock Open (when running) 2-40
305-906 DADF Feed Out Sensor Static Jam 2-41
305-907 DADF Pre Registration Sensor Static Jam 2-41
305-908 DADF Registration Sensor Static Jam 2-42
305-913 DADF Inverter Sensor Static Jam 2-42
305-915 DADF APS Sensor 1 Static Jam 2-43
305-916 DADF APS Sensor 2 Static Jam 2-43
305-917 DADF APS Sensor 3 Static Jam 2-44
305-940 DADF No Original 2-44
305-945 FS-Size Mismatch 2-45
305-946 SS-Size Mismatch 2-45
305-947 FS-Size Mismatch 2-46
305-948 SS-Size Mismatch 2-46

Chain 010 - Fuser

310-311 Heat Roll STS Disconnection Fail 2-47
310-319 Heat Roll NC Sensor Differential Amp Fail 2-47
310-320 Heat Roll STS Over Temperature Fail 2-48
310-328 Warm Up Time Fail 2-48
310-329 Fuser Fuse Cut Fail 2-49
310-330 Fuser Motor Fail 2-49
310-332 Heat Roll NC Sensor Disconnection Fail 2-50
310-333 Heat Roll NC Sensor Over Temperature Fail 2-50
310-334 Heat Roll NC Sensor Broken Fail 2-51
310-335 Heat Roll NC Sensor Range Fail 2-51
310-337 Heat Roll Paper Wrap 2-52
310-338 Fuser On Time Fail 2-52
310-379 Fuser Hot Not Ready Return Time Fail 2-53

Chain 012 (Integrated Finisher)

312-132 (Integrated Finisher) Entrance Sensor ON Jam 2-55
312-151 (Integrated Finisher) Compiler Exit Sensor OFF Jam 2-56
312-152 (Integrated Finisher) Compiler Exit Sensor ON Jam 2-57
312-161 (Integrated Finisher) Set Eject Jam 2-58
312-210 (Integrated Finisher) NVM Fail 2-59
312-211 (Integrated Finisher) Stacker Tray Fail 2-60
312-221 (Integrated Finisher) Front Tamper Home Sensor ON Fail 2-61
312-223 (Integrated Finisher) Front Tamper Home Sensor OFF Fail 2-62
312-224 (Integrated Finisher) Rear Tamper Home Sensor OFF Fail 2-63
312-259 (Integrated Finisher) Eject Home Sensor ON Fail 2-64
312-263 (Integrated Finisher) Rear Tamper Home Sensor ON Fail 2-65
312-280 (Integrated Finisher) Eject Home Sensor OFF Fail 2-66
312-283 (Integrated Finisher) Set Clamp Home Sensor ON Fail 2-67
312-284 (Integrated Finisher) Set Clamp Home Sensor OFF Fail 2-68
312-291 (Integrated Finisher) Stapler Fail 2-69
312-301 (Integrated Finisher) Top Cover Interlock OPEN 2-70
312-302 (Integrated Finisher) Front Cover Interlock OPEN 2-71
312-334 (Integrated Finisher) Download Failure 2-72
312-903 (Integrated Finisher) Paper Remains at Compiler Exit Sensor 2-73
312-916 (Integrated Finisher) Mix Full Stack 2-73
312-917 (Integrated Finsher) Stacker Tray Staple Set Over Count 2-74
312-928 (Integrated Finisher) Scratch Sheet Compile 2-74
312-930 (Integrated Finisher) Stacker Tray Full 2-75
312-935 (Integrated Finisher) Paper Remains at Entrance Sensor 2-75
312-976 (Integrated Finisher) Staple Status Failed 2-76
312-977 (Integrated Finisher) Stapler Feed Ready - TBD 2-76
312-982 (Integrated Finisher) Stacker Tray Lower Safety 2-77

Chain 012 (Finisher LX)

312-111 (LX) H-Transport Entrance Sensor Off Jam A 2-79
312-112 (LX) H-Transport Entrance Sensor On Jam A 2-80
312-132 (LX) Finisher Entrance Sensor On Jam 2-81
312-151 (LX) Compiler Exit Sensor Off Jam 2-82
312-152 (LX) Compiler Exit Sensor On Jam 2-83
312-161 (LX) Finisher Set Eject Jam 2-84
312-210 (LX) NVM Access Fault 2-85
312-211 (LX) Stacker Tray Fault 2-85
312-212 (LX) Stacker Tray Upper Limit Fault 2-86
312-213 (LX) Stacker Tray Lower Limit Fault 2-87
312-221 (LX) Front Tamper Home Sensor On Failure 2-88
312-223 (LX) Front Tamper Home Sensor Off Failure 2-89
312-224 (LX) Rear Tamper Home Sensor Off Failure 2-90
312-231 (LX) Punch Home Sensor On Fail 2-91
312-243 (LX) Booklet Folder Home Sensor On Fail 2-92
312-249 (LX) Booklet Front Stapler Fail 2-92
312-260 (LX) Eject Clamp Home Sensor On Failure 2-93
312-263 (LX) Rear Tamper Failure 2-94
312-265 (LX) Booklet Folder Home Sensor OFF Fail 2-95
312-268 (LX) Booklet Rear Stapler Fail 2-95
312-269 (LX) Booklet Sub-CPU Communications Fail 2-96
312-282 (LX) Eject Clamp Home Sensor Off Failure 2-96
312-283 (LX) Set Clamp Home Sensor On Failure 2-97
312-284 (LX) Set Clamp Home Sensor Off Failure 2-98
312-291 (LX) Stapler Failure 2-99
312-295 (LX) Stapler Move Position Sensor On Failure 2-100
312-296 (LX) Staple Move Sensor Off Failure 2-100
312-300 (LX) Eject Cover Open 2-101
312-302 (LX) Finisher Front Door Open 2-102
312-303 (LX) Finisher H-Transport Cover Open 2-102
312-334 (LX) Download Failure 2-103
312-700 (LX) Punch Box Nearly Full 2-103
312-901 (LX) H-Transport Entrance Sensor Static Jam 2-104
312-903 (LX) Paper Remains at Compiler Exit Sensor 2-104
312-905 (LX) Compiler Tray No Paper Sensor Static JAM 2-105
312-916 (LX) Mix Full Stack 2-105
312-917 (LX) Stacker Tray Staple Set Over Count 2-107
312-928 (LX) Scratch Sheet Compile 2-109
312-930 (LX) Stacker Tray Full 2-109
312-935 (LX) Paper at Finisher Entrance Sensor 2-111
312-949 (LX) Punch Box Missing 2-111
312-963 (LX) Punch Box Full 2-112
312-976 (LX) Staple Status Fault 2-112
312-977 (LX) Stapler Feed Ready - TBD - Reviewer see note 2-113
312-978 (LX) Booklet Staple NG - TBD 2-113
312-979 (LX) Stapler Near Empty 2-114
312-982 (LX) Finisher Stacker Tray Lower Safety 2-114
312-984 (LX) Booklet Low Staple Front 2-115
312-989 (LX) Booklet Low Staple Rear 2-115

Chain 013 (Finisher LX)

313-210 (LX) Booklet Staple Move Home Sensor ON 2-117
313-211 (LX) Booklet Staple Move Home Sensor OFF 2-117
313-212 (LX) Booklet Staple Move Position Sensor On Fail 2-118
313-213 (LX) Booklet Staple Move Position Sensor Off Fail 2-119
313-220 (LX) Booklet Creaser Detect Fail 2-120
313-306 (LX) Booklet Safety Switches Open 2-120
313-307 (LX) Booklet Cover Open 2-121

Chain 016 - Controller

316-XXX Controller Faults Entry - TBD 2-123
316-1 2-127
316-2 2-128
316-3 2-128
316-4 2-129

Chain 019 Image Processing

319-300 Unable to Read or Write to Image Disk 2-131
319-301 Unable to Write to Image Disk 2-131
319-302 Bad Data Received from Image DIsk 2-132
319-303 Unable to Format Image Disk 2-132
319-310 System Disk No Capacity Information at Power Up 2-133
319-401 Out of Memory Caused By Stress Document 2-133
319-402 Out of Memory Caused by Stress Job 2-134
319-403 Out of Memory With More Than 1 Job in EPC 2-134

319-404 Video Compressor DVMA Timeout 2-135
319-405 Video Compressor DVMA Timeout 2-135
319-406 Video Loopback DVMA Timeout 2-136
319-409 Job Integrity Cannot be Gauranteed 2-136
319-410-00 Mark Output Timeout 2-137
319-410-01 Mark Output Timeout 2-137
319-410-2 Compress Image Timeout 2-138
319-410-3 Decompress Image Timeout 2-138
319-410-4 Merge Image Timeout 2-139
319-410-5 Rotate Image Timeout 2-139
319-410-6 Network Input Failure 2-140
319-410-7 E-Fax Send/Receive Failure 2-140
319-410-8 Scan Input Failure 2-141
319-410-9 Byte Count Error 2-141
319-410-10 Setup Too Late 2-142
319-410-11 DMA Master Abort 2-142
319-410-12 Huffman Error 2-143
319-410-13 EOR Error 2-143
319-750 EPC Memory Size Changed Configuration at Power Up 2-144
319-752 EPC Memory Size Changed Configuration at Power Up 2-144
319-754 Image Disk Configuration Changed at Power Up 2-145
319-760 Test Patterns Missing From EPC 2-145

Chain 020 Embedded Fax

320-302 Fax Unexpected Reset 2-147
320-303 Fax Basic Card Unrecoverable Fault 2-147
320-305 Fax System Low Memory Unrecoverable Fault 2-148
320-320 Fax Not Cleared By Reset 2-148
320-322 Fax NV Device Not Present - TBD 2-149
320-323 Fax System Low Memory Recoverable Fault - TBD 2-149
320-324 Fax Out Of File Memory - TBD 2-150
320-327 Fax Extended Card Fault 2-150
320-331 Fax Network Line 1 Fault 2-151
320-332 Fax Network Line 2 Fault 2-151
320-338 Fax Communication Failure at POST 2-152
320-339 Internal Fax Card Fault 2-152
320-340 Fax Port 2 Modem Failure 2-153
320-341 Fax Basic Card Failed Fault 2-153
320-342 Fax File Integrity Fault - TBD 2-154
320-345 Fax Port 1 Modem Failure 2-154
320-701 Fax Phonebook Download Fault 2-155
320-710 Fax Immediate Image Overwrite (IIO) Error 2-155
320-711 Fax On Demand Image Overwrite (ODIO) Error 2-156

Chain 022 System Faults

322-300-05 Image Complete Fault 2-157
322-300-10 DVMA Transfer fault 2-157
322-300-16 Clock Overflow Fault 2-158
322-301-05 Scan Resource Fault 2-158
322-309-04 No Accepts Received Fault 2-159
322-310-04 Extended Job Service Fault 2-159
322-311-04 Sequencer Response Fault 2-160
322-314-04 Module Registration Error 2-160
322-315-04 Module Completion Fault 2-161
322-316-04 Job Paper Tray Fault - TBD - see Note to reviewer 2-161
322-317-04 Job Finishing Fault - TBD - see reviewer notes 2-162
322-318-04 Job IOT Fault - TBD - see reviewer notes 2-162
322-319-04 IOT Integrity Problem While Printing a Job 2-163
322-320 Scan to File Install Fault 2-163
322-321-00 Scan to File Remove Fault 2-164
322-321-04 RS422 Configuration Mismatch 2-164
322-322 LAN FAX Install Fault 2-165
322-323 LAN FAX Remove Fault 2-165
322-324 Scan to E-Mail Install Fault 2-166
322-325 Scan to E-Mail Remove Fault 2-166
322-326 IFAX install Fault 2-167
322-327 IFAX Remove Fault 2-167
322-328 Incomplete System Information 2-168
322-330-00 PagePack PIN Entry Locked 2-168
322-330-01 List Jobs Request Timed Out Between UI CCS 2-169
322-330-02 Queue to NC Print Timeout 2-169
322-330-03 Queue to Scan to File Timeout 2-170
322-330-04 Queue to FaxSend Timeout 2-170
322-330-05 Queue to DC JOB service Timeout 2-171
322-330-06 Queue to Scan to Distribution Timeout 2-171
322-332 Plan Conversion Entry Locked 2-172
322-335 JBA install Fault 2-172
322-336 JBA Remove Fault 2-173
322-337 ODIO install fault 2-173
322-338 ODIO Remove Fault 2-174
322-339 IIO install Fault 2-174
322-340 IIO Remove Fault 2-175
322-350-01 Software Detects Non-Valid Xerox SOK 1 2-175
322-350-02 Software Detects Non-Valid Xerox SOK 2 or 3 2-176
322-351-01 SOK 1 Write Failure 2-176
322-351-02 SOK 2 Write Failure 2-177
322-351-03 SOK 3 Write Failure 2-177
322-352-00 Serial Number Missing From Memory - TBD - see Note to Reviewer 2-178
322-352-01 Serial Update Required 2-179
322-360 Service Plan Lost or Missing - TBD - see Note to reviewer 2-180
322-370 Unable to Communicate With XSA Database - TBD see note to reviewer 2-180
322-371 Fax Application Registration Error - TBD see Reviewer Notes 2-181
322-372 Fax Application Un-Registration Error - TBD see Reviewer Notes 2-181
322-407 Embedded Fax Install Fault - TBD see Reviewer Notes 2-182
322-417 Embedded Fax Removal Fault - TBD see Reviewer Notes 2-182
322-419 Enable Embedded Fax Fault - TBD see Reviewer Notes 2-183
322-421 Disable Embedded Fax Fault - TBD see Reviewer Notes 2-183
322-701-04 Module Completion Fault 2-184
322-720 Service Registry Bad Data / Corrupted. 2-184
322-721 Triple A Gets No Response From SRS 2-185
322-750-04 Output Device Configuration Mismatch - TBD - see reviewer Notes 2-185
322-750-17 Accessory Card Configuration Mismatch - TBD - see reviewer Notes 2-186
322-751-04 Paper Tray Configuration Mismatch 2-186
322-754-17 UI Configuration Change Fault 2-187

322-755-17 RDT Configuration Mismatch - TBD - see reviewer notes 2-187

Chain 024 - Controller Communications

024-923 Y Toner Empty RAP 2-189
024-924 M Toner Empty RAP 2-189
024-925 C Toner Empty RAP 2-190

Chain 041 - IOT Manager (MCU)

341-310 IM Logic Fail 2-191
341-324 MCU PWB F1 Open 2-191
341-325 MCU PWB F2 Open 2-192
341-326 MCU PWB F3 Open 2-192
341-327 MCU PWB F4 Open 2-193
341-328 MCU PWB F5 Open 2-193
341-329 MCU PWB F6 Open 2-194
341-330 MCU PWB F7 Open 2-194
341-331 MCU PWB F8 Open 2-195
341-332 MCU PWB F9 Open 2-195
341-334 MCU PWB F11 Open 2-196
341-335 MCU PWB F12 Open 2-196
341-340 MCU NVM (EEPROM) Data Fail 2-197
341-341 MCU NVM (EEPROM) Access Fail 2-197
341-342 MCU NVM (EEPROM) Buffer Fail 2-198
341-347 Serial I/O Fail 2-198

Chain 042 - Drives/ NOHAD

342-313 LV Rear Intake Fan Fail 2-199
342-323 Drum Motor Fail 2-199
342-325 Main Motor Fail 2-200
342-330 Fuser Exhaust Fan Fail 2-201
342-337 NOHAD Logic Fail 2-201
342-345 Drum Coupling Contact/Retract Fail 2-202
342-346 Drive Logic Fail 2-202

Chain 045 - MM

345-310 Image Ready NG 2-203
345-311 Controller Communication Fail 2-203
345-313 ENG_LOGIC_FAIL 2-204
345-321 MK_Panel_NG 2-204
345-322 MK_Pitch_NG 2-205
345-331 MK_MKIF_MSG_Reject 2-205
345-332 MK_MMIF_MSG_Reject 2-206
345-350 MK_Emergency_Over_Wait 2-206
345-351 MK_Emergency_No_Timer 2-207
345-352 MK_Emergency_Enforced_Stop 2-207

Chain 047 - Output Control

347-211 Exit 1 OCT Home Fail 2-209
347-213 Finisher Type Mismatch 2-209
347-310 Finisher Communication Fault 2-210
347-320 All Destination Tray Broken 2-210

Chain 061 - ROS

361-320 Polygon Motor Fail 2-211
361-334 SOS Fail 2-211
361-340 LD Fail 2-212
361-607 LD Warning 2-212

Chain 062 - IIT/IPS

362-396 CCD Cable Connection Fail 2-213
362-397 IIT-SBC Video Cable Connection Fail 2-213
362-398 IIT-SBC I/O Cable Connection Fail 2-214
362-399 DADF Cable Fail 2-214
362-450 to 362-468 IIT Calibration Faults 2-215
362-476 Carriage Home Sensor 2-216
362-481 DADF Client Time Out Fault 2-216
362-486 Supply 24 Volt Error 2-217
362-490 Data Steerer Error 2-217
362-779 FPGA Not Loaded 2-218
362-780 FPGA CRC Error 2-218

Chain 066- IIT/IPS

366-450 Calibration Dark Range Not Clear 2-219
366-451 Calibration Dark Range Not Done 2-219
366-452 Calibration Pixel Offset Not Clear 2-220
366-453 Calibration Pixel Offset Not Done 2-220
366-454 Calibration Gain Range Not Clear 2-221
366-455 Calibration Gain Range Not Done 2-221
366-457 Calibration Pixel Gain Not Done 2-222
366-458 Calibration Dark Range Errors 2-222
366-459 Calibration Pixel Offset Hi Errors 2-223
366-460 Calibration Pixel Offset Lo Errors 2-223
366-461 Calibration Gain Range Errors 2-224
366-462 Calibration Pixel Gain Hi Errors 2-224
366-463 Calibration Pixel Gain Lo Errors 2-225
366-466 Dark Range Rail Error 2-225
366-467 Gain Range Rail Error 2-226
366-468 Color State Errors 2-226
366-490 Data Steerer Error - Taurus 2 2-227
366-779 FPGA not loaded (Side 2) 2-227
366-780 FPGA CRC Error (Side 2) 2-228

Chain 071 - Tray 1 PH

371-105 Registration Sensor On Jam (Tray 1) 2-229
371-210 Tray 1 Lift Fail 2-229
371-212 Tray 1 Paper Size Sensor Broken 2-230

Chain 072 - Tray 2 PH

372-101 Tray 2 Misfeed 2-231
372-102 Feed Out Sensor 2 On Jam (Tray 1/2) 2-232
372-105 Registration Sensor On Jam (Tray 2) 2-232
372-210 Lift Fail (Tray 2) 2-233
372-212 Paper Size Sensor Broken (Tray 2) 2-233
372-900 Feed Out Sensor Static Jam (Tray 2) 2-234

Chain 073 - Tray 3 PH

373-101 Misfeed (Tray 3) 2-235
373-102 Feed Out Sensor 3 On Jam (Tray 4) 2-236
373-105 Registration Sensor On Jam (Tray 3) 2-236
373-210 Lift Fail (Tray 3) 2-237
373-212 Paper Size Sensor Broken (Tray 3) 2-238
373-900 Feed Out Sensor Static Jam (Tray 3) 2-238

Chain 074 - Tray 4 PH

374-101 Miss Feed (Tray 4) 2-239
374-105 Registration Sensor On Jam (Tray 4) 2-240
374-210 Lift Fail (Tray 4) 2-241
374-212 Paper Size Sensor Broken (Tray 4) 2-241
374-900 Feed Out Sensor Static Jam (Tray 4) 2-242

Chain 075 - Tray 5 (MSI) PH

375-135 Registration Sensor On Jam (MSI) 2-243

Chain 077 - Paper Transportation

377-101 Registration Sensor Off Jam 2-245
377-103 Exit Sensor 1 Off Jam 2-245
377-104 Exit Sensor 1 Off Jam (Short) 2-246
377-105 Exit Sensor 2 Off Jam 2-246
377-106 Exit Sensor 1 On Jam 2-247
377-109 Exit Sensor 2 On Jam 2-247
377-110 POB Sensor On Jam 2-248
377-123 Registration Sensor On Jam (Duplex Wait) 2-248
377-130 Registration Sensor On Jam (Duplex Direct) 2-249
377-131 Duplex Wait Sensor On Jam 2-249
377-211 Tray Module Kind Mismatch 2-250
377-212 Tray Module Reset Fail 2-250
377-214 Tray Module Logic Fail 2-251
377-215 Tray Module Communication Fail 2-251
377-300 Front Cover Interlock Open 2-252
377-301 L/H Cover Interlock Open 2-252
377-305 Tray Module L/H Cover Open 2-253
377-307 Duplex Cover Open 2-253
377-308 L/H High Cover Open 2-254
377-309 L/H Low Cover Open 2-254
377-314 P/H Module Logic Fail 2-255
377-900 Registration Sensor Static Jam 2-255
377-901 Exit Sensor 1 Static Jam 2-256
377-902 Exit Sensor 2 Static Jam 2-256
377-903 POB Sensor Static Jam 2-257
377-907 Duplex Wait Sensor Static Jam 2-257

Chain 089 - RegiCon

389-600 RC Sample Lateral Fault-A1 2-259
389-601 RC Sample Block Fault-A1-In 2-259
389-603 RC Sample Block Fault-A1-Out 2-260
389-604 RC Sample Block Fault-B-#1-In 2-261
389-606 RC Sample Block Fault-B-#1-Out 2-262
389-607 RC Sample Block Fault-B-#2-In 2-263
389-609 RC Sample Block Fault-B-#2-Out 2-264
389-610 RC Sample Block Fault-B-#3-In 2-265
389-612 RC Sample Block Fault-B-#3-Out 2-266
389-616 RC Data Over Flow Fault 2-267
389-623 Vsout Stability Fault-In 2-268
389-629 Vsout Stability Fault-Out 2-269
389-654 RC Sample Block Fault-B-#0-In 2-269
389-656 RC Sample Block Fault-B-#0-Out 2-270
389-660 RC Sample Count Fault-B-In 2-271
389-662 RC Sample Count Fault-B-Out 2-272
389-663 RC Sample Count Fault-A1-In 2-273
389-665 RC Sample Count Fault-A1-Out 2-274
389-666 TMA LED Fault-In 2-275
389-667 TMA LED Fault-Out 2-276
389-668 TMA Threshold Fault-In 2-277
389-669 TMA Threshold Fault-Out 2-278

Chain 091 - Xerographics

391-312 CC HVPS Broken 2-281
391-313 CRUM ASIC Communication Fail 2-281
391-400 Waste Toner Bottle Near Full 2-282
391-401 Drum Cartridge K Near Life 2-282
391-402 Drum Cartridge K Life Over 2-283
391-411 Drum Cartridge Y Near Life 2-283
391-421 Drum Cartridge M Near Life 2-284
391-431 Drum Cartridge C Near Life 2-284
391-480 Drum Cartridge Y Life Over 2-285
391-481 Drum Cartridge M Life Over 2-285
391-482 Drum Cartridge C Life Over 2-286
391-910 Waste Toner Bottle Not In Position 2-286
391-911 Waste Toner Bottle Full 2-287
391-913 Drum Cartridge K Life End 2-287
391-914 Drum CRUM K Communication Fail 2-288
391-915 Drum CRUM K Data Broken 2-288
391-916 Drum CRUM K Data Mismatch 2-289
391-917 Drum CRUM Y Communication Fail 2-289
391-918 Drum CRUM M Communication Fail 2-290
391-919 Drum CRUM C Communication Fail 2-290
391-920 Drum Y CRUM Data Broken 2-291
391-921 Drum CRUM K Not In Position 2-291
391-922 Drum M CRUM Data Broken 2-292
391-923 Drum C CRUM Data Broken 2-292
391-924 Drum Y CRUM Data Mismatch 2-293
391-925 Drum M CRUM Data Mismatch 2-293
391-926 Drum C CRUM Data Mismatch 2-294
391-927 Drum CRUM Y Not In Position 2-294
391-928 Drum CRUM M Not In Position 2-295
391-929 Drum CRUM C Not In Position 2-295
391-932 Drum Cartridge (Y) Life End 2-296
391-933 Drum Cartridge (M) Life End 2-296
391-934 Drum Cartridge (C) Life End 2-297
391-936 Drum CRUM Y Data Mismatch 2-297
391-937 Drum CRUM M Data Mismatch 2-298

391-938 Drum CRUM C Data Mismatch 2-298
391-939 Drum CRUM K Data Mismatch 2-299

Chain 092 - ProCon

392-312 ATC Fail [Y] 2-301
392-313 ATC Fail [M] 2-301
392-314 ATC Fail [C] 2-302
392-315 ATC Fail [K] 2-302
392-649 ADC Shutter Open Fail 2-303
392-650 ADC Shutter Close Fail 2-303
392-651 ADC Sensor Fail 2-304
392-654 ATC Sensor M Output Fail 2-304
392-657 ATC Amplitude Fail [Y] 2-305
392-658 ATC Amplitude Fail [M] 2-305
392-659 ATC Amplitude Fail [C] 2-306
392-660 ATC Amplitude Fail [K] 2-306
392-661 Temperature Sensor Fail 2-307
392-662 Humidity Sensor Fail 2-307
392-665 ATC Average Fail [Y] 2-308
392-666 ATC Average Fail [M] 2-308
392-667 ATC Average Fail [C] 2-309
392-668 ATC Average Fail [K] 2-309
392-670 ADC Patch Fail [Y] 2-310
392-671 ADC Patch Fail [M] 2-310
392-672 ADC Patch Fail [C] 2-311
392-673 ADC Patch Fail [K] 2-311

Chain 093 - Development

393-314 Dispense Motor (Y) Fail 2-313
393-315 Dispense Motor (M) Fail 2-313
393-316 Dispense Motor (C) Fail 2-314
393-317 Dispense Motor (K) Fail 2-314
393-320 Developer Motor Fail (Y, M, C) 2-315
393-400 Toner Cartridge (Y) Near Empty 2-315
393-423 Toner Cartridge (M) Near Empty 2-316
393-424 Toner Cartridge (C) Near Empty 2-316
393-425 Toner Cartridge (K) Near Empty 2-317
393-912 Toner Cartridge (K) Empty 2-317
393-924 Toner CRUM (K) Communication Fail 2-318
393-925 Toner CRUM (K) Data Broken Fail 2-318
393-926 Toner CRUM (K) Data Mismatch Fail 2-319
393-927 Toner CRUM (Y) Communication Fault 2-320
393-928 Toner CRUM (M) Communication Fault 2-321
393-929 Toner CRUM (C) Communication Fault 2-321
393-933 Toner CRUM (Y) Data Broken Fault 2-322
393-934 Toner CRUM (M) Data Broken Fault 2-322
393-935 Toner CRUM (C) Data Broken Fault 2-323
393-937 Toner CRUM (Y) Data Mismatch Fault 2-323
393-938 Toner CRUM (M) Data Mismatch Fault 2-324
393-939 Toner CRUM (C) Data Mismatch Fault 2-325
393-948 Developer (Y) Install Times Over Fault 2-326
393-953 Developer (Y) Install Mode Fault 2-327
393-954 Developer (M) Install Mode Fault 2-327
393-955 Developer (C) Install Mode Fault 2-328
393-956 Developer (K) Install Mode Fault 2-328
393-957 Developer (M) Install Times Over Fault 2-329
393-958 Developer (C) Install Times Over Fault 2-329
393-959 Developer (K) Install Times Over Fault 2-330
393-970 Toner CRUM (Y) Not In Position 2-330
393-971 Toner CRUM (M) Not In Position 2-331
393-972 Toner CRUM (C) Not In Position 2-331
393-973 Toner CRUM (K) Not in Position 2-332

Chain 094 - Transfer

394-417 IBT Unit Near End Warning 2-333
394-419 2nd BTR Unit Near End Warning 2-333
394-420 IBT Unit End Warning 2-334
394-422 2nd BTR Unit End Warning 2-334
394-910 IBT Unit Or 2nd BTR Unit Not In Position 2-335

Chain 095 - SW Upgrade Failure

395-XXX Software Upgrade Failure - TBD 2-337

Other Faults

AC Power 2-339
STBY +5VDC Power 2-339
+5VDC Power 2-340
+24VDC Power 2-341
Machine Not Ready 2-341
Unresettable Machine Status Messages 2-344
Toner CRUM Mismatch 2-350
Output is Blank in All Modes 2-350
OF 2 UI Touch Screen Failure RAP 2-351
OF 3.3 Power On Self Test (POST) 2-352
OF 9-1 RegiCon Measurement Cycle 2-354
OF 13-1 Secure Access 2-355
OF 16-1 Network Printing Problems Entry 2-358
OF 16-2 Novell Netware Checkout 2-367
OF 16-3 TCP/IP Checkout 2-368
OF 16-4 AppleTalk Checkout 2-369
OF 16-5 NETBIOS Checkout 2-370
OF 16-8 Problem Printing Job 2-371
OF 16-9 Job Prints Incorrectly 2-372
OF 17-1 FAX Entry 2-372
OF 99-1 Reflective Sensor 2-374
OF 99-2 Transmissive Sensor 2-375
OF 99-3 Switch 2-376
OF 99-4 Generic Solenoid/Clutch 2-376
OF 99-6 2 Wire Motor Open 2-377
OF 99-7 2 Wire Motor On 2-378
OF 99-8 Set Gate Solenoid Open 2-378
OF 99-9 Multiple Wire Motor 2-379

302-302 Flash Rewrite Failure

Flash Rewrite Failure

NOTE: *The chain/link fault code for this RAP is an internal machine code and is never displayed or logged in Fault Code History. Use this RAP to troubleshoot persistent machine status conditions that cannot be cleared by performing the indicated process (e.g., loading paper, closing a cover, replacing a CRU, etc). Entry to this RAP is usually via the Machine Status Faults RAP located in the Other Faults section, or a chain/link listing on a BSD.*

Initial Actions

Power Off and On

Procedure

Perform the following in order:

1. Reload SW using GP 9
2. Replace the Hard Drive ([PL 35.2]).
3. Replace the SBC PWB (PL 35.2)

302-306 Flash Erase Failure

Flash Erase Failure

NOTE: *The chain/link fault code for this RAP is an internal machine code and is never displayed or logged in Fault Code History. Use this RAP to troubleshoot persistent machine status conditions that cannot be cleared by performing the indicated process (e.g., loading paper, closing a cover, replacing a CRU, etc). Entry to this RAP is usually via the Machine Status Faults RAP located in the Other Faults section, or a chain/link listing on a BSD.*

Initial Actions

Power Off and On

Procedure

Perform the following in order:

1. Reload SW using GP 9
2. Replace the Hard Drive ([PL 35.2]).
3. Replace the SBC PWB (PL 35.2)

302-308 Flash Download Failure

Flash Download Failure

NOTE: *The chain/link fault code for this RAP is an internal machine code and is never displayed or logged in Fault Code History. Use this RAP to troubleshoot persistent machine status conditions that cannot be cleared by performing the indicated process (e.g., loading paper, closing a cover, replacing a CRU, etc). Entry to this RAP is usually via the Machine Status Faults RAP located in the Other Faults section, or a chain/link listing on a BSD.*

Initial Actions

Power Off and On

Procedure

Perform the following in order:

1. Reload SW using GP 9
2. Replace the Hard Drive ([PL 35.2]).
3. Replace the SBC PWB (PL 35.2)

302-312 Application SW Checksum Failure

Application SW Checksum Failure

NOTE: *The chain/link fault code for this RAP is an internal machine code and is never displayed or logged in Fault Code History. Use this RAP to troubleshoot persistent machine status conditions that cannot be cleared by performing the indicated process (e.g., loading paper, closing a cover, replacing a CRU, etc). Entry to this RAP is usually via the Machine Status Faults RAP located in the Other Faults section, or a chain/link listing on a BSD.*

Initial Actions

Power Off and On

Procedure

Perform the following in order:

1. Reload SW using GP 9
2. Replace the Hard Drive ([PL 35.2]).
3. Replace the SBC PWB (PL 35.2)

302-315 Service Registry Bad or Corrupted Data

Service Registry Bad data / Corrupted

Initial Actions

Power Off and On

Procedure

Perform the following in order:

1. Reload SW using GP 9
2. Replace the Hard Drive ([PL 35.2]).
3. Replace the SBC PWB (PL 35.2)

302-316 SRS Returns Invalid or Missing Data

SRS returns to LUI “invalid fields, invalid data, or missing data”

Initial Actions

Power Off and On

Procedure

Perform the following in order:

1. Reload SW using GP 9
2. Replace the Hard Drive ([PL 35.2]).
3. Replace the SBC PWB (PL 35.2)

302-317 LUI Gets No Response From SRS

LUI gets no response from SRS

Initial Actions

Power Off and On

Procedure

Perform the following in order:

1. Reload SW using GP 9
2. Replace the Hard Drive ([PL 35.2]).
3. Replace the SBC PWB (PL 35.2)

302-320 UI Data Time Out Error

A software error has occurred. User intervention is required to Power Off/Power On the machine. Printing may be disabled.

NOTE: *The chain/link fault code for this RAP is an internal machine code and is never displayed or logged in Fault Code History. Use this RAP to troubleshoot persistent machine status conditions that cannot be cleared by performing the indicated process (e.g., loading paper, closing a cover, replacing a CRU, etc). Entry to this RAP is usually via the Machine Status Faults RAP located in the Other Faults section, or a chain/link listing on a BSD.*

Procedure

Perform the following in order:

1. Power Off and On
2. Reload SW using GP 9
3. Go to the 303-347 UI Communication Fault RAP

302-321 XEIP Browser Dead

XEIP Browser Dead

NOTE: *Set by the XUI when the XEIP browser does not respond or is known to be dead.*

Procedure

Perform the following in order:

1. Power Off and On
2. Reload software via AltBoot (GP 9).
3. Replace the Hard Drive ([PL 35.2]).
4. Replace the SBC PWB (PL 35.2)

302-380 UI Communication Fault

Communication via H-H USB netpath connection between NC and UI panel is not working

Procedure

Perform the following in order:

1. Power Off and On
2. Reload SW using GP 9
3. Use BSD 2.1 - UI and BSD 16.1 - SBC to troubleshoot the problem.
4. Replace the USB Cable PL 18.5.
5. Replace the Hard Drive ([PL 35.2]).
6. Replace the SBC PWB (PL 35.2). If replaceing the SBC PWB does not resolve the problem, install the original SBC PWB.

302-381 UI Communication Fault

Communication via USB connection between CC and UI panel is not working.

Procedure

Go to 302-380 UI Communication Fault RAP

302-390 Config Services Not Stable

During power up all configurable services have not achieved a stable state after 5 minutes from power up

NOTE: *The chain/link fault code for this RAP is an internal machine code and is never displayed or logged in Fault Code History. Use this RAP to troubleshoot persistent machine status conditions that cannot be cleared by performing the indicated process (e.g., loading paper, closing a cover, replacing a CRU, etc). Entry to this RAP is usually via the Machine Status Faults RAP located in the Other Faults section, or a chain/link listing on a BSD.*

Procedure

Go to the Machine Not Ready RAP.

303-306 Downgrade Not Permitted

Downgrade not permitted. A Customer upgrade was attempted, which would result in a downgrade, which is not allowed.

Procedure

If a downgrade is required by the customer perform the downgrade using AltBoot in GP 9. If not, power off and then power on the machine.

303-307 Upgrade Synchronization Failure

SW Upgrade Synchronization Failure. Customer or CSE tried to perform upgrade resulting in a SW Upgrade Synchronization problem.

Initial Actions

Power off and power on the machine.

Procedure

Perform thefollowing in order:

1. Check connections and cables and perform Software Upgrade again using Altboot in GP 9.
2. If the upgrade fails again, use Altboot to reload the SW version that existed on the machine prior to attempting the upgrade.
3. If the previous version loads correctly,download the upgrade SW again, verify that the files are correct for the machine, and attempt the upgrade using different media.
4. Replace the Hard Drive (PL 35.2).
5. Replace the SBC PWB (PL 35.2). If this fails to resolve the problem, reinstall the original SBC PWB and call service support.

303-316 CCM Cannot Communicate with IOT

Controller cannot communicate with IOT.

The scanner and copier are disabled but printing is operational.

Initial Actions

Enter the diagnostic mode dC131, and change the NVM setting in the following location (SWUP NVM Save Switch): [616-116] Change the value to 2

Procedure

Switch the power off then on. If the problem continues, perform GP 9.

Inspect the MCU PWB for loose connections or any obvious electrical/mechanical cause for malfunction. Clean, reseat or replace as required. If this does not resolve the problem replace the following in order:

- Replace the MCU PWB (PL 18.1)
- Replace the Hard Drive (PL 35.2).
- Replace the SBC PWB (PL 35.2)

303-317 IOT NVM Save Failure

IOT NVM Save Failure

Procedure

Switch the power off then on. **Fault Code 303-317 is still declared.**

Y **N**

If intermittent performance is suspected, inspect the MCU PWB, SBC PWB and SBC NVM PWB for loose connections or any obvious electrical/mechanical cause for malfunction.

This fault can be caused by IOT software corruption or a software version mismatch between the IOT module and the rest of the software:

- If the fault occurred after replacing the MCU PWB, it is probably a software mismatch; perform a Software Upgrade (GP 9).
- If the fault is unrelated to MCU replacement it may be corrupt software; perform an Alt-boot SW Upgrade.
- If the fault is unrelated to MCU replacement it may be corrupt software; perform an Alt-boot SW Upgrade.

  If this does not resolve the problem replace the following in order,

  1. Replace the MCU PWB (PL 18.1)
  2. Replace the Hard Drive (PL 35.2).
  3. Replace the SBC PWB (PL 35.2).

303-318 IOT NVM Init Failure

IOT NVM Init Failure

Initial Actions

- Disconnect any Foreign Interface devices.
- Obtain all of the following information:
  - Saved Machine Settings, if possible.
  - NVM value factory setting report (typically it is located in the Tray 1 pocket)
  - Any customer setting Auditron account from the system administrator
  - Any setting changes (specifically NVM settings) shown on the machine's service log.
  - Any customer settings in the Tools mode.
- If possible, save Critical NVM (dC361).

Procedure

Perform dC301 NVM Initialization for the IOT.

After the initialization is complete, use the data accumulated in **Initial Actions** to restore the machine to its previous configuration.

303-319 IOT NVM Restore Failure

IOT NVM Restore Failure

Procedure

Perform dC361 NVM Restore for the IOT Critical NVM.

If this does not resolve the problem replace the following in order,

1. Replace the MCU PWB (PL 18.1)
2. Replace the Hard Drive (PL 35.2).
3. Replace the SBC PWB (PL 35.2).

303-320 Incompatible Product Type

Incompatible Product Type. SW Upgrade Aborted due to incompatible product type - software set does not match hardware.

Procedure

Perform GP 9 Software Upgrade with the correct Software module or select the correct .dlm file using the Web UI to upgrade the machine.

303-324 Software Upgrade File Transfer Failure

SW Upgrade File Transfer failure

Initial Actions

Power off and power on the machine.

Procedure

Perform thefollowing in order:

1. Check connections and cables and perform SW Upgrade again using Altboot in GP 9.
2. Download the upgrade SW again, verify that the files are correct for the machine, and attempt the upgrade using different media.
3. Replace the Hard Drive (PL 35.2).
4. Replace the SBC PWB (PL 35.2). If this fails to resolve the problem, reinstall the original SBC PWB and call service support.

303-325 Wall Clock Timeout During Power Up

System detects that the Wall Clock has not incremented within 1.5 seconds during Power On.

Procedure

Power OFF and then ON.

If the problem continues, call service support for assistance.

303-326 Upgrade is not Required

Upgrade not required, since the SW Upgrade version is the same as the SW version on the machine.

Procedure

If a software reinstallation is required, perform Forced Altboot using GP 9 .

303-327 Upgrade Failure

Upgrade Failed. this problem could be caused by an internal timing issue (Front side BUS speed set incorrectly), hardware error, user error and others.

Initial Actions

Check connections and reseat PWBs on SBC PWB and attempt another upgrade using GP 9 forced upgrade for the system or platform that failed.

Procedure

The problem is still present:

Y **N**

Return to Service Call Procedures.

Call service support for assistance.

303-329 Upgrade Request During Diagnostics

Upgrade request received during active diagnostics.

Procedure

Exit Diagnostics and perform GP 9 Software Upgrade.

303-330 Upgrade Request During Active Security Feature

Upgrade request received during active Security function.

Procedure

Wait until Security function (Image Overwrite) is completed and perform GP 9 Software Upgrade.

303-331 Communication Fault With NC

Main controller board cannot communicate with Network Controller and unable to reestablish communications for 12 minutes. This problem could be caused by loose connections or improperly seated PWBs.

Procedure

Reseat PWBs on the SBC (Riser PWB, Fax PWB (if installed) and Memory PWBs). **The problem continues.**

Y **N**

Return to Service Call Procedures.

Go to the Machine Not Ready RAP.

303-332 NC Communications Timeout

CCS unable to reestablish communication with the Network Controller for 12 minutes. This problem could be caused by loose connections or improperly seated PWBs.

Procedure

Reseat PWBs on the SBC (Riser PWB, Fax PWB (if installed) and Memory PWBs). **The problem continues.**

Y **N**

Return to Service Call Procedures.

Go to the Machine Not Ready RAP.

303-338 Main Controller Has Been Reset

System detect that the main controller on CCM has been reset; either the watch dog timer timed out or the application SW wrote to an illegal address.

Initial Actions

Check that the customer does not have another device configured with the same IP address.

Procedure

Switch the power off then on.

Perform dC361 to restore NVM.

If the problem continues, perform GP 9 SW upgrade.

303-346 UI Communication Timeout

The SBC is unable to reestablish communication with the UI after 30 seconds.

Procedure

Go to the 303-347 .

303-347 UI Communication Fault

BSD-ON: BSD 3.4 - SBC - UI Communication

The SBC cannot communicate with UI PWB.

If communication is not reestablished within 30 seconds, fault code 03-346 will be declared.

NOTE: *The UI will not display this fault because of the communication problem with the SBC PWB. This fault can be viewed only with the PWS.*

Procedure

NOTE: *This fault can occur if the UI software version is not compatible with the SBC software version.*

Perform GP 9. If the problem persists, go to the Machine Not Ready RAP.

303-355 CCM POST Failure During NVM Test/NVM Battery Dead

Power On Self-Test failure detected during the NVM Integrity Test; NVM battery dead

Procedure

The SBC NVM battery may be loose, failing, or has failed. Reseat the SBC NVM PWB battery. If the problem continues, go to REP 3.1 to replace the SBC NVM PWB.

303-380 Distribution PWB Missing or Disconnected

BSD-ON: BSD 3.5 - SBC DADF Communication

PWB is missing or disconnected.

Procedure

Check the connectors between the SBC and the IIT/IPS PWBs.

Power OFF and then ON.

If the problem continues, call service support for assistance.

303-390 Upgrade Automation Failed

Upgrade Automation failed

Procedure

Call service support for assistance.

303-398 SOK 1 Not Detected

SIM Card serial number mismatch. The number recorded on the SIM Card does not match the machine serial number. The first time a SIM is used in a machine the Serial number of the machine is written to the SIM.

Procedure

NOTE: *If the problem surfaced after a PWB replacement that required serialization, make sure the serialization was performed correctly (dC132). If the machine is not serialized correctly this could be the cause of the SIM problem.*

The SIM belongs to another machine and will not work in the machine it is being tried on. Try a new SIM, of the same type, to install the feature(s) on the machine. If the problem still exists after using the new SIM, call service support for assistance.

303-399 SOK 1 Not Detected

SIM Card data cannot be processed

Procedure

Check the configuration page. If the option is listed as" installed/not enabled," use the **Tools** menu (see GP 2) to enable.

If the SIMs are not available, contact the Sales Rep. and ensure the feature was ordered by verifying the paperwork with the CBR. If the feature was ordered, a replacement part can be ordered from the Parts List. If it was not ordered, the Sales Rep. should order the SIM/feature using the correct Sales Order Number.

If the problem still occurs with new SIMs, replace the SBC PWB (PL 35.2).

303-401 Basic FAX Not Detected or Confirmed

Basic FAX not detected/confirmed

Procedure

Switch the power off then on. If the problem continues, go to the OF 17-1 FAX Entry.

303-403 Extended FAX Not Detected or Confirmed

Extended FAX not detected/confirmed

Procedure

Switch the power off then on. If the problem continues, go to the OF 17-1 FAX Entry.

303-417 Incompatible FAX SW Detected at Power Up

Incompatible FAX software detected at power on

Procedure

Switch the power off then on. If the problem continues, reload FAX software (GP 9).

303-777 Power Loss Detected

Input Power loss detected or software corruption.

Procedure

1. Power off and Power on the machine.
2. Verify customer power outlet voltage is correct.
3. Reload current IOT software or perform an upgrade, as necessary (GP 9).

303-788 Failed to Exit Power Save Mode

CCS Runtime could not enter power saver mode S3.

NOTE: *The CC USB could not re-enumerate the UI panel coming out of sleep, which keeps parts of the system in power saver mode S3 and parts awake. This prevents system entry into power saver mode S3 at the next attempt to do so.*

Procedure

Switch the power off then on to allow system to enter power save.

303-790 Timezone File Cannot be Set

Timezone file cannot be set. At power up, the timezone setting is not valid due to NVM corruption, or OS file system problem. Time Zone overridden to GMT: DST Disabled.

Procedure

Switch the power off then on.

Perform dC361 to restore NVM.

If the problem continues, perform GP 9 SW upgrade.

305-121 DADF Feed Out Sensor On Jam

BSD-ON:BSD 5.5 - Document Feed (2 of 2)

After feeding started (DADF Feed Motor On (CW)) in Duplex, the DADF Feed Out Sensor did not turn ON within the specified time.

NOTE: *When turning the power OFF, turn OFF the power switch first and then the main power switch.*

Procedure

Remove the DADF Rear Cover and open the Top Cover. Enter the Diag Mode, turn ON dC330 [005-205]. Activate the Actuator of the DADF Feed Out Sensor manually. **Does the display change between High/Low?**

Y N

Disconnect the DADF Feed Out Sensor connector P/J772. **Is High displayed?**

Y N

Check the wire between the DADF Feed Out Sensor P/J772-2 and the DADF PWB P/J757-5 for a short circuit. If no problems are found, replace the DADF PWB (PL 51.2).

Is the voltage between the DADF Feed Out Sensor P/J772-1 (+) and P/J772-3 (-) +5VDC?

Y N

Check the wires between the DADF PWB P/J757-6 and the DADF Feed Out Sensor P/J772-1, as well as between the DADF PWB P/J757-4 and the DADF Feed Out Sensor P/J772-3 for open circuits and poor contacts.

Replace the DADF Feed Out Sensor (PL 51.6).

Press the **Stop** button. Turn ON dC330 [005-010] (DADF Feed Motor). **Does the DADF Feed Motor operate?**

Y N

Is the voltage between the DADF Feed Motor P/J776-5/2 (+) and the GND (-) +24VDC?

Y N

Is the voltage between the DADF PWB P/J754-B1/B2 (+) and the GND (-) +24VDC?

Y N

Is the voltage between the DADF PWB P/J753-2 (+) and the GND (-) +24VDC?

Y N

Refer to **BSD 5.1 - Document Setting** and check the +24VDC circuit to the DADF PWB P/J753-2.

Replace the DADF PWB (PL 51.2).

Check the wires between the DADF PWB P/J754-B1 and the DADF Feed Motor P/J776-5, as well as between the DADF PWB P/J754-B2 and the DADF Feed Motor P/J776-2 for an open circuit and poor contact.

Turn OFF the power and disconnect P/J754 from the DADF PWB.

A

Measure the wire wound resistance of the Motor.

- Between P/J754 pin-B1 and P/J754 pin-B5/B6
- Between P/J754 pin-B2 and P/J754 pin-B3/B4

Is the resistance approx. 1 Ohm for each?

Y N

Replace the DADF Feed Motor (PL 51.5).

Replace the DADF PWB (PL 51.2).

Check the following:

- The document path for foreign substances.
- The DADF Feed/Nudger Roll for contamination, wear or revolution failure.
- The DADF Feed Out Sensor Actuator for disengagement, drag and damage.

A

305-122 DADF Simplex/Side 1 Pre Registration Sensor On Jam

BSD-ON:BSD 5.5 - Document Feed (2 of 2)

- After Pre-Feed started for the first sheet (DADF Feed Motor On (CW)) in Simplex and Duplex, the DADF Pre Registration Sensor did not turn ON within the specified time.
- After Pre-Feed started for the second sheet onwards (DADF Feed Motor On (CW)) in Duplex, the DADF Pre Registration Sensor did not turn ON within the specified time.

NOTE: *When turning the power OFF, turn OFF the power switch first and then the main power switch.*

Procedure

Open the Top Cover and remove the Invert Chute. Enter the Diag Mode, turn ON dC330 [005-206]. Block the DADF Pre Registration Sensor using a sheet of paper, etc. **Does the display change to High?**

Y N

Disconnect the DADF Pre Registration Sensor connector P/J774. **Does the display change to High?**

Y N

Check the wire between the DADF Pre Registration Sensor P/J774-2 and the DADF PWB P/J757-11 for a short circuit. If no problems are found, replace the DADF PWB (PL 51.2).

Is the voltage between P/J774-1 (+) and P/J774-3 (-) +5VDC?

Y N

Check the wires between the DADF PWB P/J757-12 and the DADF Pre Registration Sensor P/J774-1, as well as between the DADF PWB P/J757-10 and the DADF Pre Registration Sensor P/J774-3 for open circuits and poor contacts.

Replace the DADF Pre Registration Sensor (PL 51.17).

Press the **Stop** button. Turn ON dC330 [005-010] (DADF Feed Motor). **Does the DADF Feed Motor operate?**

Y N

Is the voltage between the DADF Feed Motor P/J776-5/2 (+) and the GND (-) +24VDC?

Y N

Is the voltage between the DADF PWB P/J754-B1/B2 (+) and the GND (-) +24VDC?

Y N

Is the voltage between the DADF PWB P/J753-2 (+) and the GND (-) +24VDC?

Y N

Refer to **BSD 5.1 - Document Setting** and check the +24VDC circuit to the DADF PWB P/J753-2.

Replace the DADF PWB (PL 51.2).

A B C

Check the wires between the DADF PWB P/J754-B1 and the DADF Feed Motor P/J776-5, as well as between the DADF PWB P/J754-B2 and the DADF Feed Motor P/J776-2 for an open circuit and poor contact.

Turn OFF the power and disconnect P/J754 from the DADF PWB.
Measure the wire wound resistance of the Motor.

- Between P/J754 pin-B1 and P/J754 pin-B5/B6
- Between P/J754 pin-B2 and P/J754 pin-B3/B4

Is the resistance approx. 1 Ohm for each?

Y N

Replace the DADF Feed Motor (PL 51.5).

Replace the DADF PWB (PL 51.2).

Check the following:

- The document path for foreign substances.
- Overly strong Retard pressure.
- The DADF Pre Registration Sensor Actuator for disengagement, drag and damage.

A B C

305-123 DADF Simplex/Side 1 Registration Sensor On Jam

BSD-ON:BSD 5.5 - Document Feed (2 of 2)

BSD-ON:BSD 5.6 - Document Scan and Invert

After Pre Registration operation started (DADF Feed Motor On (CCW)), the DADF Registration Sensor did not turn ON within the specified time.

NOTE: *When turning the power OFF, turn OFF the power switch first and then the main power switch.*

Procedure

Open the Top Cover and remove the Invert Chute. Enter the Diag Mode, turn ON dC330 [005-110]. Turn ON the DADF Registration Sensor using a sheet of paper, etc. **Does the display change to "H" (opposite to the voltage level)?**

Y N

Remove the DADF Rear Cover. **Is the voltage between the DADF PWB P/J757-14 (+) and the GND (-) +5VDC?**

Y N

Replace the DADF PWB (PL 51.2).

The voltage between the DADF Registration Sensor P/J775-2 (+) and the GND (-) +5VDC?

Y N

Check the connection between the DADF Registration Sensor P/J775-2 and the DADF PWB P/J757-14 for an open circuit and poor contact.

The voltage between the DADF Registration Sensor P/J775-1 (+) and P/J775-3 (-) +5VDC?

Y N

Check the wires between the DADF PWB P/J757-15 and the DADF Registration Sensor P/J775-1, as well as between the DADF PWB P/J757-13 and the DADF Registration Sensor P/J775-3 for open circuits and poor contacts.

Replace the DADF Registration Sensor (PL 51.17).

Press the **Stop** button. Turn ON dC330 [005-008] (DADF Feed Motor). **Does the DADF Feed Motor operate?**

Y N

The voltage between the DADF Feed Motor P/J776-5/2 (+) and the GND (-) +24VDC?

Y N

The voltage between the DADF PWB P/J754-B1/B2 (+) and the GND (-) +24VDC?

Y N

The voltage between the DADF PWB P/J753-2 (+) and the GND (-) +24VDC?

Y N

Refer to **BSD 5.1 - Document Setting** and check the +24VDC circuit to the DADF PWB P/J753-2.

Replace the DADF PWB (PL 51.2).

A B C

Check the wires between the DADF PWB P/J754-B1 and the DADF Feed Motor P/J776-5, as well as between the DADF PWB P/J754-B2 and the DADF Feed Motor P/J776-2 for an open circuit and poor contact.

Turn OFF the power and disconnect P/J754 from the DADF PWB. Measure the wire wound resistance of the Motor.

- Between P/J754 pin-B1 and P/J754 pin-B5/B6
- Between P/J754 pin-B2 and P/J754 pin-B3/B4

The resistance approx. 1 Ohm for each?

Y N

Replace the DADF Feed Motor (PL 51.5).

Replace the DADF PWB (PL 51.2).

Check the following:

- The document path for foreign substances.
- The Transportation Roll for contamination, wear or revolution failure.

305-125 DADF Registration Sensor Off Jam

BSD-ON: BSD 5.5 - Document Feed (2 of 2)

BSD-ON:BSD 5.6 - Document Scan and Invert

After the DADF Pre Registration Sensor turned OFF, the DADF Registration Sensor did not turn OFF within the specified time.

NOTE: *When turning the power OFF, turn OFF the power switch first and then the main power switch.*

Procedure

Check the following:

- Transportation failure due to foreign substance in the document path
- The surface of the roll for foreign substance
- The surface of the roll for wear
- Check the sw version of the controller sw - update if required (GP 9).
- DADF Feed Motor: dC330 [005-008] (PL 51.5)
- DADF Registration Motor: dC330 [005-033] (PL 51.5)
- Check the circuit between the DADF Registration Sensor and the DADF PWB
- Check the circuit between the DADF Pre Registration Sensor and the DADF PWB
- DADF Registration Sensor: dC330 [005-110] (PL 51.17)
- DADF Pre Registration Sensor: dC330 [005-206] (PL 51.17)
- DADF PWB failure. (PL 51.2)

305-131 DADF Invert Sensor On Jam (During Invert)

BSD-ON: BSD 5.6 - Document Scan and Invert

After the DADF Registration Sensor turned ON at Invert, the DADF Invert Sensor did not turn ON within the specified time.

NOTE: *When turning the power OFF, turn OFF the power switch first and then the main power switch.*

Procedure

Check the following:

- Transportation failure due to foreign substance in the document path
- The surface of the roll for foreign substance
- The surface of the roll for wear
- Check the sw version of the controller sw - update if required (GP 9).
- DADF Registration Motor: dC330 [005-033] (PL 51.5)
- Check the circuit between the DADF Registration Sensor and the DADF PWB
- Check the circuit between the DADF Inverter Sensor and the DADF PWB
- DADF Registration Sensor: dC330 [005-110] (PL 51.17)
- DADF Invert Sensor: dC330 [005-211] (PL 51.9)
- DADF PWB failure. (PL 51.2)

305-132 DADF Invert Sensor On Jam

BSD-ON:BSD 5.6 - Document Scan and Invert

After the Read Speed Control operation started (DADF Registration Motor On (CCW)), the DADF Invert Sensor did not turn ON within the specified time.

NOTE: *When turning the power OFF, turn OFF the power switch first and then the main power switch.*

Procedure

Check the following:

- Transportation failure due to foreign substance in the document path
- The surface of the roll for foreign substance
- The surface of the roll for wear
- Check the sw version of the controller sw - update if required (GP 9).
- DADF Registration Motor: dC330 [005-033] (PL 51.5)
- Check the circuit between the DADF Inverter Sensor and the DADF PWB
- DADF Invert Sensor: dC330 [005-211] (PL 51.9)
- DADF PWB failure. (PL 51.2)

305-134 DADF Inverter Sensor Off Jam (During Invert)

BSD-ON: BSD 5.6 - Document Scan and Invert

- After the DADF Registration Sensor turned OFF at Invert of the last document, the DADF Inverter Sensor did not turn OFF within the specified time.
- During the Invert where there is a next document, after the Read Speed Control operation started (DADF Registration Motor On (CCW)), the DADF Inverter Sensor did not turn OFF within the specified time.

NOTE: *When turning the power OFF, turn OFF the power switch first and then the main power switch.*

Procedure

Check the following:

- Transportation failure due to foreign substance in the document path
- The surface of the roll for foreign substance
- The surface of the roll for wear
- Check the sw version of the controller sw - update if required (GP 9).
- DADF Registration Motor: dC330 [005-033] (PL 51.5)
- Check the circuit between the DADF Registration Sensor and the DADF PWB
- Check the circuit between the DADF Inverter Sensor and the DADF PWB
- DADF Registration Sensor: dC330 [005-110] (PL 51.17)
- DADF Invert Sensor: dC330 [005-211] (PL 51.9)
- DADF PWB failure. (PL 51.2)

305-135 DADF Side 2 Pre Registration Sensor On Jam

BSD-ON:BSD 5.1 - Document Setting

BSD-ON: BSD 5.5 - Document Feed (2 of 2)

BSD-ON:BSD 5.6 - Document Scan and Invert

BSD-ON:BSD 5.7 - Document Exit Transportation

After the Invert operation started (DADF Registration Motor On (CW)) at Invert, the DADF Pre Registration Sensor did not turn ON within the specified time.

NOTE: *When turning the power OFF, turn OFF the power switch first and then the main power switch.*

Procedure

Check the following:

- Transportation failure due to foreign substance in the document path
- The surface of the roll for foreign substance
- The surface of the roll for wear
- Check the sw version of the controller sw - update if required (GP 9).
- DADF Registration Motor: dC330 [005-033] (PL 51.5)
- Check the circuit between the DADF Pre Registration Sensor and the DADF PWB
- DADF Pre Registration Sensor: dC330 [005-206] (PL 51.17)
- DADF PWB failure. (PL 51.2)
- The Gate Solenoid dC330 [005-090] for operation failure
- Check if the Exit Roll is nipping properly. (Including the operations of Exit Nip Release Solenoid (dC330 [005-072])) (PL 51.6).

305-136 DADF Side 2 Registration Sensor On Jam

BSD-ON:BSD 5.5 - Document Feed (2 of 2)

BSD-ON:BSD 5.6 - Document Scan and Invert

BSD-ON:BSD 5.7 - Document Exit Transportation

After the DADF Pre Registration Sensor turned ON at Invert, the DADF Registration Sensor did not turn ON within the specified time.

NOTE: *When turning the power OFF, turn OFF the power switch first and then the main power switch.*

Procedure

Check the following:

- Transportation failure due to foreign substance in the document path
- The surface of the roll for foreign substance
- The surface of the roll for wear
- Check the sw version of the controller sw - update if required (GP 9).
- Check if the Exit Roll is nipping properly. (Including the operations of Exit Nip Release Solenoid (dC330 [005-072])) (PL 51.6)
- Check the circuit between the DADF Pre Registration Sensor and the DADF PWB
- DADF Pre Registration Sensor: dC330 [005-206] (PL 51.17)
- Check the circuit between the DADF Registration Sensor and the DADF PWB
- DADF Registration Sensor: dC330 [005-110] (PL 51.17)
- DADF Feed Motor: dC330 [005-008] (PL 51.5)
- DADF PWB failure. (PL 51.2)

305-139 DADF Invert Sensor Off Jam

BSD-ON:BSD 5.1 - Document Setting

BSD-ON: BSD 5.6 - Document Scan and Invert

BSD-ON:BSD 5.7 - Document Exit Transportation

- After the DADF Registration Sensor turned OFF in the Scan operation, the DADF Invert Sensor did not turn OFF within the specified time.
- During the 1 Sided mode scan operation where there is a next document, after the Next Document Scan Read Speed Control started (DADF Registration Motor On (CCW)), the DADF Inverter Sensor did not turn OFF within the specified time.

NOTE: *When turning the power OFF, turn OFF the power switch first and then the main power switch.*

Procedure

Check the following:

- Transportation failure due to foreign substance in the document path
- The surface of the roll for foreign substance
- The surface of the roll for wear
- Check the sw version of the controller sw - update if required (GP 9).
- The Gate Solenoid dC330 [005-090] for operation failure
- DADF Registration Motor: dC330 [005-033] (PL 51.5)
- Check if the Exit Roll is nipping properly. (Including the operations of Exit Nip Release Solenoid (dC330 [005-072])) (PL 51.6)
- Check the circuit between the DADF Registration Sensor and the DADF PWB
- DADF Registration Sensor: dC330 [005-110] (PL 51.17)
- Check the circuit between the DADF Inverter Sensor and the DADF PWB
- DADF Invert Sensor: dC330 [005-211] (PL 51.9)
- DADF PWB failure. (PL 51.2)

305-145 DADF Registration Sensor Off Jam (Invert)

BSD-ON: BSD 5.5 - Document Feed (2 of 2),

BSD-ON:BSD 5.6 - Document Scan and Invert

After the DADF Pre Registration Sensor turned OFF at Invert, the DADF Registration Sensor did not turn OFF within the specified time.

NOTE: *When turning the power OFF, turn OFF the power switch first and then the main power switch.*

Procedure

Check the following:

- Transportation failure due to foreign substance in the document path
- The surface of the roll for foreign substance
- The surface of the roll for wear
- Check the sw version of the controller sw - update if required (GP 9).
- DADF Registration Motor: dC330 [005-033] (PL 51.5)
- DADF Feed Motor: dC330 [005-008] (PL 51.5)
- Check the circuit between the DADF Registration Sensor and the DADF PWB
- DADF Registration Sensor: dC330 [005-110] (PL 51.17)
- Check the circuit between the DADF Pre Registration Sensor and the DADF PWB
- DADF Pre Registration Sensor: dC330 [005-206] (PL 51.17)
- DADF PWB failure. (PL 51.2)

305-146 DADF Pre Registration Sensor Off Jam

BSD-ON: BSD 5.5 - Document Feed (2 of 2)

BSD-ON:BSD 5.6 - Document Scan and Invert

BSD-ON:BSD 5.7 - Document Exit Transportation

After the DADF Feed Out Sensor turned OFF in 1 Sided mode, the DADF Pre Registration Sensor did not turn OFF within the specified time.

NOTE: *When turning the power OFF, turn OFF the power switch first and then the main power switch.*

Procedure

Check the following:

- Transportation failure due to foreign substance in the document path
- The surface of the roll for foreign substance
- The surface of the roll for wear
- Check the sw version of the controller sw - update if required (GP 9).
- DADF Registration Motor: dC330 [005-033] (PL 51.5)
- DADF Feed Motor: dC330 [005-010] (PL 51.5)
- Check if the Exit Roll is nipping properly. (Including the operations of Exit Nip Release Solenoid (dC330 [005-072])) (PL 51.6)
- Check the circuit between the DADF Pre Registration Sensor and the DADF PWB
- DADF Pre Registration Sensor: dC330 [005-206] (PL 51.17)
- DADF PWB failure. (PL 51.2)

305-147 DADF Pre Registration Sensor Off Jam (Invert)

BSD-ON: BSD 5.5 - Document Feed (2 of 2)

BSD-ON:BSD 5.6 - Document Scan and Invert

After the DADF Registration Motor turned ON at Invert, the DADF Pre Registration Sensor did not turn OFF within the specified time.

NOTE: *When turning the power OFF, turn OFF the power switch first and then the main power switch.*

Procedure

Check the following:

- Transportation failure due to foreign substance in the document path
- The surface of the roll for foreign substance
- The surface of the roll for wear
- Check the sw version of the controller sw - update if required (GP 9).
- DADF Registration Motor: dC330 [005-033] (PL 51.5)
- DADF Feed Motor: dC330 [005-010] (PL 51.5)
- Check the circuit between the DADF Pre Registration Sensor and the DADF PWB
- DADF Pre Registration Sensor: dC330 [005-206] (PL 51.17)
- DADF PWB failure. (PL 51.2)

305-194 Size Mismatch Jam On SS Mix-Size

BSD-ON: BSD 5.3 - Document Size Sensing (2 of 2)

In Slow Scan (SS) Mixed mode, it was detected that the size in the Fast Scan Direction was different from the width of the document guide.

NOTE: *When turning the power OFF, turn OFF the power switch first and then the main power switch.*

Procedure

Check the following:

- Check that the DADF Tray Set Guide operates normally.
- Check the circuit between the DADF Tray Set Guide Sensors 1-3 and the DADF PWB
- DADF Tray Set Guide Sensors 1-3: dC330 [005-215/216/217] (PL 51.10)

305-196 Size Mismatch Jam On No Mix-Size

BSD-ON:BSD 5.2 - Document Size Sensing (1 of 2)

BSD-ON:BSD 5.3 - Document Size Sensing (2 of 2)

BSD-ON:BSD 5.4 - Document Feed (1 of 2)

A document in a different size from the first document was detected in the No Mix mode.

NOTE: *When turning the power OFF, turn OFF the power switch first and then the main power switch.*

Procedure

Check the following:

- DADF Tray Set Guide Sensors 1-3: dC330 [005-215/216/217] (PL 51.10)
- DADF APS Sensor 1: dC330 [005-218] (PL 51.17)
- Document Tray Size Sensor 1/2: dC330 [005-221/222] (PL 51.10)
- Check the sw version of the controller sw - update if required (GP 9).
- If no problems are found, replace the DADF PWB (PL 51.2).

305-197 Prohibit Combine Size Jam

BSD-ON: BSD 5.5 - Document Feed (2 of 2)

A prohibited size combination was detected.

Procedure

Explain to the customer that the following combinations are prohibited.

- 5.5 x 8.5 SEF and all the other document sizes.
- A5 SEF and all the other document sizes.
- B5 SEF, plus 11 x 15 SEF, 11 x 17 SEF, A4 LEF, A3 LEF, 8.5 x 11 LEF.

305-198 Too Short Size Jam

BSD-ON: BSD 5.5 - Document Feed (2 of 2)

It was detected that the document length in Slow Scan direction was out of the specifications.

- Simplex mode: shorter than 85mm
- Duplex mode: shorter than 110mm

NOTE: *When turning the power OFF, turn OFF the power switch first and then the main power switch.*

Procedure

Check the document size a user has scanned. If its length is within the available range for DADF feeding, check the circuit between the DADF Pre Registration Sensor, the DADF Feed Out Sensor, and the DADF PWB.

Check the sw version of the controller sw - update if required (GP 9). If no problems are found, replace the DADF PWB (PL 51.2).

305-199 Too Long Size Jam

BSD-ON:BSD 5.5 - Document Feed (2 of 2)

It was detected that the document length in Slow Scan direction was out of the specifications.

- Simplex and Duplex modes: 431.9mm or longer
- Fax mode: 1501.0mm or longer

NOTE: *When turning the power OFF, turn OFF the power switch first and then the main power switch.*

Procedure

Check the document size a user has scanned. If its length is within the available range for DADF feeding, check the circuit between the DADF Pre Registration Sensor, the DADF Feed Out Sensor, and the DADF PWB.

Check the sw version of the controller sw - update if required (GP 9). If no problems are found, replace the DADF PWB (PL 51.2).

305-210 DADF Download Fail

BSD-ON:BSD 3.5 - SBC DADF Communication

When the IISS starts up (Power ON/Sleep recovery), it was detected that the DADF is in Download Mode.

Procedure

Complete the DADF software download.

305-280 DADF EEPROM. Fail

BSD-ON:BSD 3.5 - SBC DADF Communication

The DADF EEPROM. Read/Write operation failed.

NOTE: *When turning the power OFF, turn OFF the power switch first and then the main power switch.*

Procedure

If the problem persists after turning the power OFF then ON. Check the sw version of the controller sw - update if required (GP 9). Replace the DADF PWB (PL 51.2).

305-305 DADF Feeder Cover Interlock Open (when running)

BSD-ON:BSD 5.1 - Document Setting

The Feeder Cover Interlock was opened during DADF operation.

NOTE: *When turning the power OFF, turn OFF the power switch first and then the main power switch.*

Procedure

Check the following:

- The DADF Feeder Cover for misalignment or damage.
- DADF Interlock Switch: dC330 [005-212] (PL 51.5)
- Check the sw version of the controller sw - update if required (GP 9)
- If the problem persists, check the circuit between the DADF Interlock Switch and the DADF PWB. If no problems are found, replace the DADF PWB (PL 51.2).

305-906 DADF Feed Out Sensor Static Jam

BSD-ON:BSD 5.5 - Document Feed (2 of 2)

The DADF Feed Out Sensor turns ON at the following times.

1. When Power is ON
2. At Feeder Cover Interlock Close
3. At Platen Interlock Close

NOTE: *When turning the power OFF, turn OFF the power switch first and then the main power switch.*

Procedure

Check the following:

- Check the DADF Feed Out Sensor for remaining paper, the Actuator for return failure, foreign substances, contamination on sensors, and etc.
- DADF Feed Out Sensor: dC330 [005-205] (PL 51.6)
- Check the sw version of the controller sw - update if required (GP 9)
- If the problem persists, check the circuit between the DADF Feed Out Sensor and the DADF PWB. If no problems are found, replace the DADF PWB (PL 51.2).

305-907 DADF Pre Registration Sensor Static Jam

BSD-ON:BSD 5.5 - Document Feed (2 of 2)

The DADF Pre Registration Sensor turns ON at the following times:

1. When Power is ON
2. At Feeder Cover Interlock Close
3. At Platen Interlock Close

NOTE: *When turning the power OFF, turn OFF the power switch first and then the main power switch.*

Procedure

Check the following:

- Check the DADF Pre Registration Sensor for remaining paper, the Actuator for return failure, foreign substances, contamination on sensors, and etc.
- DADF Pre Registration Sensor: dC330 [005-206] (PL 51.17)
- Check the sw version of the controller sw - update if required (GP 9).
- If the problem persists, check the circuit between the DADF Pre Registration Sensor and the DADF PWB. If no problems are found, replace the DADF PWB (PL 51.2).

305-908 DADF Registration Sensor Static Jam

BSD-ON:BSD 5.6 - Document Scan and Invert

The DADF Registration Sensor turns ON at the following times:

1. When Power is ON
2. At Feeder Cover Interlock Close
3. At Platen Interlock Close

NOTE: *When turning the power OFF, turn OFF the power switch first and then the main power switch.*

Procedure

Check the following:

- Check the DADF Registration Sensor for remaining paper, foreign substances, contamination on sensors, and etc.
- DADF Registration Sensor: dC330 [005-110] (PL 51.17)
- Check the sw version of the controller sw - update if required (GP 9).
- If the problem persists, check the circuit between the DADF Registration Sensor and the DADF PWB. If no problems are found, replace the DADF PWB (PL 51.2).

305-913 DADF Inverter Sensor Static Jam

BSD-ON:BSD 5.6 - Document Scan and Invert

The DADF Invert Sensor turns On at the timings below.

1. When Power is ON
2. At Feeder Cover Interlock Close
3. At Platen Interlock Close

NOTE: *When turning the power OFF, turn OFF the power switch first and then the main power switch.*

Procedure

Check the following:

- Check the DADF Inverter Sensor for remaining paper, the Actuator for return failure, foreign substances, contamination on sensors, and etc.
- DADF Invert Sensor: dC330 [005-211] (PL 51.9)
- Check the sw version of the controller sw - update if required (GP 9).
- If the problem persists, check the circuit between the DADF Invert Sensor and the DADF PWB. If no problems are found, replace the DADF PWB (PL 51.2).

305-915 DADF APS Sensor 1 Static Jam

BSD-ON:BSD 5.4 - Document Feed (1 of 2)

The DADF APS Sensor 1 turns ON at the timings below.

1. When Power is ON
2. At Feeder Cover Interlock Close
3. At Platen Interlock Close

NOTE: *When turning the power OFF, turn OFF the power switch first and then the main power switch.*

Procedure

Check the following:

- Check the DADF APS Sensor 1 for remaining paper, the Actuator for return failure, foreign substances, contamination on sensors, and etc.
- DADF APS Sensor 1: dC330 [005-218] (PL 51.17)
- Check the sw version of the controller sw - update if required (GP 9).
- If the problem persists, check the circuit between the DADF APS Sensor 1 and the DADF PWB. If no problems are found, replace the DADF PWB (PL 51.2).

305-916 DADF APS Sensor 2 Static Jam

BSD-ON:BSD 5.4 - Document Feed (1 of 2)

The DADF APS Sensor 2 turns ON at the timings below.

1. When Power is ON
2. At Feeder Cover Interlock Close
3. At Platen Interlock Close

NOTE: *When turning the power OFF, turn OFF the power switch first and then the main power switch.*

Procedure

Check the following:

- Check the DADF APS Sensor 2 for remaining paper, the Actuator for return failure, foreign substances, contamination on sensors, and etc.
- DADF APS Sensor 2: dC330 [005-219] (PL 51.17)
- Check the sw version of the controller sw - update if required (GP 9).
- If the problem persists, check the circuit between the DADF APS Sensor 2 and the DADF PWB. If no problems are found, replace the DADF PWB (PL 51.2).

305-917 DADF APS Sensor 3 Static Jam

BSD-ON:BSD 5.4 - Document Feed (1 of 2)

The DADF APS Sensor 3 turns ON at the timings below.

1. When Power is ON
2. At Feeder Cover Interlock Close
3. At Platen Interlock Close

NOTE: *When turning the power OFF, turn OFF the power switch first and then the main power switch.*

Procedure

Check the following:

- Check the sw version of the controller sw - update if required (GP 9).
- Check the DADF APS Sensor 3 for remaining paper, the Actuator for return failure, foreign substances, contamination on sensors, and etc.
- DADF APS Sensor 3: dC330 [005-220] (PL 51.17)
- If the problem persists, check the circuit between the DADF APS Sensor 3 and the DADF PWB. If no problems are found, replace the DADF PWB (PL 51.2).

305-940 DADF No Original

Operation Fail. Final document correction notification due to DADF document being pulled out.

NOTE: *The chain/link fault code for this RAP is an internal machine code and is never displayed or logged in Fault Code History. Use this RAP to troubleshoot persistent machine status conditions that cannot be cleared by performing the indicated process (e.g., loading paper, closing a cover, replacing a CRU, etc). Entry to this RAP is usually via the Machine Status Faults RAP located in the Other Faults section, or a chain/link listing on a BSD.*

Procedure

- Reload the document.
- Check the sw version of the controller sw - update if required (GP 9).

305-945 FS-Size Mismatch

BSD-ON:BSD 5.3 - Document Size Sensing (2 of 2)

BSD-ON:BSD 5.4 - Document Feed (1 of 2)

In No Mix or Slow Scan (SS) Mixed mode, it was detected that a document with a different size in Fast Scan (FS) direction was transported from the DADF. (If paper was not fed, 305-945 is displayed. If paper was fed, 305-947 is displayed.)

NOTE: *When turning the power OFF, turn OFF the power switch first and then the main power switch.*

Procedure

Check the following:

- Check the sw version of the controller sw - update if required (GP 9).
- Check that the DADF Tray Set Guide operates normally.
- DADF Tray Set Guide Sensors 1-3: dC330 [005-215/216/217] (PL 51.10)
- Check the circuit between the DADF Tray Set Guide Sensors 1-3 and the DADF PWB
- DADF APS Sensors 1-3: dC330 [005-218/219/220] (PL 51.17)
- Check the circuit between the DADF APS Sensors 1-3 and the DADF PWB.
- If no problems are found, replace the DADF PWB (PL 51.2).

305-946 SS-Size Mismatch

BSD-ON:BSD 5.2 - Document Size Sensing (1 of 2)

BSD-ON:BSD 5.4 - Document Feed (1 of 2)

BSD-ON:BSD 5.5 - Document Feed (2 of 2)

BSD-ON:BSD 5.6 - Document Scan and Invert

In No Mix mode, it was detected that a document with a different size in Slow Scan (SS) direction was transported from the DADF. (If paper was not fed, 305-946 is displayed. If paper was fed, 305-948 is displayed.)

NOTE: *When turning the power OFF, turn OFF the power switch first and then the main power switch.*

Procedure

Check the following:

- Check the sw version of the controller sw - update if required (GP 9).
- Document Tray Size Sensor 1/2: dC330 [005-221/222] (PL 51.10)
- Check the circuit between the Document Tray Size Sensor 1/2 and the DADF PWB.
- DADF Feed Out Sensor: dC330 [005-205] (PL 51.6)
- DADF Registration Sensor: dC330 [005-110] (PL 51.17)
- DADF APS Sensors 1-3: dC330 [005-218/219/220] (PL 51.17)
- Check the circuit between the DADF APS Sensors 1-3 and the DADF PWB.
- If no problems are found, replace the DADF PWB (PL 51.2).

305-947 FS-Size Mismatch

BSD-ON:,BSD 5.3 - Document Size Sensing (2 of 2)

BSD-ON:BSD 5.4 - Document Feed (1 of 2)

In No Mix or Slow Scan (SS) Mixed mode, it was detected that a document with a different size in Fast Scan (FS) direction was transported from the DADF. (If paper was not fed, 305-945 is displayed. If paper was fed, 305-947 is displayed.)

NOTE: *When turning the power OFF, turn OFF the power switch first and then the main power switch.*

Procedure

Check the following:

- Check the sw version of the controller sw - update if required (GP 9).
- Check that the DADF Tray Set Guide operates normally.
- DADF Tray Set Guide Sensors 1-3: dC330 [005-215/216/217] (PL 51.10)
- Check the circuit between the DADF Tray Set Guide Sensors 1-3 and the DADF PWB
- DADF APS Sensors 1-3: dC330 [005-218/219/220] (PL 51.17)
- Check the circuit between the DADF APS Sensors 1-3 and the DADF PWB.
- If no problems are found, replace the DADF PWB (PL 51.2).

305-948 SS-Size Mismatch

BSD-ON:BSD 5.2 - Document Size Sensing (1 of 2)

BSD-ON:BSD 5.4 - Document Feed (1 of 2)

BSD-ON:BSD 5.5 - Document Feed (2 of 2)

BSD-ON:BSD 5.6 - Document Scan and Invert

In No Mix mode, it was detected that a document with a different size in Slow Scan (SS) direction was transported from the DADF. (If paper was not fed, 305-946 is displayed. If paper was fed, 305-948 is displayed.)

NOTE: *When turning the power OFF, turn OFF the power switch first and then the main power switch.*

Procedure

Check the following:

- Check the sw version of the controller sw - update if required (GP 9)
- Document Tray Size Sensor 1/2: dC330 [005-221/222] (PL 51.10)
- Check the circuit between the Document Tray Size Sensor 1/2 and the DADF PWB.
- DADF Feed Out Sensor: dC330 [005-205] (PL 51.6)
- DADF Registration Sensor: dC330 [005-110] (PL 51.17)
- DADF APS Sensors 1-3: dC330 [005-218/219/220] (PL 51.17)
- Check the circuit between the DADF APS Sensors 1-3 and the DADF PWB.
- If no problems are found, replace the DADF PWB (PL 51.2).

310-311 Heat Roll STS Disconnection Fail

BSD-ON:BSD 10.3 - Fusing Heat Control (2 of 2)

The open circuit AD value of the Rear Control Thermistor was detected 3 times in a row.

NOTE: *When turning the power OFF, turn OFF the power switch first and then the main power switch.*

Initial Actions

- Turn the power OFF and check whether the Fuser Assembly is installed properly.
- Check the Drawer Connector between the Fuser Assembly and the Main Unit (DP/DJ612) for broken/bent pins, foreign substances, burns, and etc.
- Check whether the MCU PWB connector P/J408 is connected properly.

Procedure

Turn the power OFF and remove the Fuser Assembly.
Measure the resistance between DP/DJ612 pin-A6 and DP/DJ612 pin-A5. **Is the resistance infinite?**

Y **N**

Check the following connections for open circuits, short circuits, and poor contacts.

- Between DP/DJ612-A2 and MCU PWB P/J408-B11
- Between DP/DJ612-A3 and MCU PWB P/J408-B10

If no problems are found, replace the MCU PWB (PL 18.1).

Replace the Fuser Assembly (PL 7.1).

310-319 Heat Roll NC Sensor Differential Amp Fail

BSD-ON:BSD 10.3 - Fusing Heat Control (2 of 2)

The temperature monitor AD value of the Center Control Temp. Sensor was detected to be abnormal 10 times in a row.

NOTE: •

To clear this fault, first remove the cause, next clear the value of NVM [744-248] to "0", and then turn the power OFF then ON.

The flag of NVM [744-248] indicates 0: Normal, 1: NCS-Center abnormal high temperature value, 2: STS-Rear abnormal high temperature value, and 3: NCS and STS high temperature error.

- *When turning the power OFF, turn OFF the power switch first and then the main power switch.*

Procedure

1. Clear the history at the NVM then turn the power OFF and ON.
2. Turn the power OFF and check the following:
   - The Fuser Assembly for improper installation
   - The Drawer Connector between the Fuser Assembly and the Main Unit (DP/DJ612) for broken/bent pins, foreign substances, burns, and etc.
   - The connection between the Fuser Assembly DP/DJ612 and the MCU PWB P/J408 for open circuit, short circuit, and poor contact

   If no problems are found, replace the following parts in sequence:
   - Check the sw version of the controller sw - reload Software (GP 9).
   - Fuser Assembly (PL 7.1)
   - MCU PWB (PL 18.1)

310-320 Heat Roll STS Over Temperature Fail

BSD-ON:BSD 1.2 -Main Power On (2 of 2)

BSD-ON:BSD 10.3 - Fusing Heat Control (2 of 2)

The AD value of the Rear Control Thermistor was detected to be at or higher than the defined value 3 times in a row.

NOTE: •

To clear this fault, first remove the cause, next clear the value of NVM [744-248] to "0", and then turn the power OFF then ON.

The flag of NVM [744-248] indicates 0: Normal, 1: NCS-Center abnormal high temperature value, 2: STS-Rear abnormal high temperature value, and 3: NCS and STS high temperature error.

- *When turning the power OFF, turn OFF the power switch first and then the main power switch.*

Initial Actions

- Turn the power OFF and remove the Fuser Assembly. Check whether foreign substances or paper is wound around the Heat Roll.
- Check whether the MCU PWB connector P/J408 is connected properly.

Procedure

Turn the power OFF, disconnect the Main LVPS connector P/J1 and P/J2.
At the PWB, measure the resistance between P/J1-3 and P/J2-3/4. **Is the resistance infinite?**

Y **N**

Replace the Main LVPS (PL 18.1)

Replace the following parts in sequence.

- Check the sw version of the controller sw - reload Software (GP 9).
- Fuser Assembly (PL 7.1)
- MCU PWB (PL 18.1)

310-328 Warm Up Time Fail

BSD-ON:BSD 10.3 - Fusing Heat Control (2 of 2)

When transitioning from the Wait state, the specified Temperature is not reached within the specified time.

NOTE: •

This Fail may occur when the temperature in the installation environment is low (10 ℃ or lower)

- *When turning the power OFF, turn OFF the power switch first and then the main power switch.*

Procedure

1. Turn the power OFF and ON.
2. Turn the power OFF and check the following:
   - The Fuser Assembly for improper installation
   - The Drawer Connector between the Fuser Assembly and the Main Unit (DP/DJ612) for broken/bent pins, foreign substances, burns, and etc.
   - The connection between the Fuser Assembly DP/DJ612 and the Main LVPS P/J2 for open circuit, short circuit, and poor contact
   - The connection between the Fuser Assembly DP/DJ612 and the MCU PWB P/J408 for open circuit, short circuit, and poor contact

   If no problems are found, replace the following parts in sequence:
   - Check the sw version of the controller sw - reload Software (GP 9).
   - Fuser Assembly (PL 7.1)
   - Main LVPS (PL 18.1)
   - MCU PWB (PL 18.1)

310-329 Fuser Fuse Cut Fail

BSD-ON:BSD 10.3 - Fusing Heat Control (2 of 2)

After the new Fuser replacement has been detected, the Fuse (Fuse 1) for old and new detection does not become open even after 1 second has passed.

NOTE: *When turning the power OFF, turn OFF the power switch first and then the main power switch.*

Procedure

1. Turn the power OFF and ON.
2. Turn the power OFF and check the following:
   - The Fuser Assembly for improper installation
   - The Drawer Connector between the Fuser Assembly and the Main Unit (DP/DJ612) for broken/bent pins, foreign substances, burns, and etc.
   - The connection between the Fuser Assembly DP/DJ612 and the MCU PWB P/J408 for open circuit, short circuit, and poor contact

   If no problems are found, replace the following parts in sequence:
   - Check the sw version of the controller sw - reload Software (GP 9).
   - Fuser Assembly (PL 7.1)
   - MCU PWB (PL 18.1)

310-330 Fuser Motor Fail

BSD-ON:BSD 10.1 - Fuser Drive Control

The Fuser Drive Motor revolution failure was detected.

NOTE: *When turning the power OFF, turn OFF the power switch first and then the main power switch.*

Initial Actions

Turn the power OFF and check whether the Fuser Assembly is installed properly.

Procedure

Turn the power ON and enter the Diag mode. Turn ON dC330 [010-001] (Fuser Drive Motor).

Can the operation noise of the Fuser Drive Motor be heard?

Y N

Is the voltage between the MCU PWB P/J409-3 (+) and the GND (-) +24VDC?

Y N

Go to +24VDC Power.

Is the voltage between the MCU PWB P/J407-A16 (+) and the GND (-) +5VDC?

Y N

Go to +5VDC Power.

Turn the power OFF. Check the wire between MCU PWB P/J407 and Fuser Drive Motor P/J207, and the wire between MCU PWB P/J409 and Fuser Drive Motor P/J206 for an open wire, a short circuit or poor contact.

If no problems are found, replace the following parts in sequence:

- Check the sw version of the controller sw - reload Software (GP 9).
- Fuser Drive Motor (PL 3.1)
- MCU PWB (PL 18.1)

Press the **Stop** button. Turn the power OFF and check the Fuser H/R for gear bite or damage. If no problems are found, replace the MCU PWB (PL 18.1).

310-332 Heat Roll NC Sensor Disconnection Fail

BSD-ON:BSD 10.3 - Fusing Heat Control (2 of 2)

When the temperature monitor value of the Rear Control Thermistor is 20°C or higher, or the open circuit AD value of the Rear Control Thermistor is 900 or higher, the compensation AD value or the detection AD value of the Center Control Temp. Sensor is 1020 or higher 10 or more times in a row. (Use the obtained compensation/detection AD value instead of the temperature monitor value (average of 4 times))

NOTE: *When turning the power OFF, turn OFF the power switch first and then the main power switch.*

Procedure

1. Turn the power OFF and ON.
2. Turn the power OFF and check the following:
   - The Fuser Assembly for improper installation
   - The Drawer Connector between the Fuser Assembly and the Main Unit (DP/DJ612) for broken/bent pins, foreign substances, burns, and etc.
   - The connection between the Fuser Assembly DP/DJ612 and the MCU PWB P/J408 for open circuit, short circuit, and poor contact

   If no problems are found, replace the following parts in sequence:
   - Check the sw version of the controller sw - reload Software (GP 9).
   - Fuser Assembly (PL 7.1)
   - MCU PWB (PL 18.1)

310-333 Heat Roll NC Sensor Over Temperature Fail

BSD-ON:BSD 1.2 -Main Power On (2 of 2)

BSD-ON:BSD 10.3 - Fusing Heat Control (2 of 2)

The temperature at the Center Control Temp. Sensor was detected to be at or higher than the defined value 10 or more times in a row.

NOTE: •

To clear this fault, first remove the cause, next clear the value of NVM [744-248] to "0", and then turn the power OFF then ON.

The flag of NVM [744-248] indicates 0: Normal, 1: NCS-Center abnormal high temperature value, 2: STS-Rear abnormal high temperature value, and 3: NCS and STS high temperature error.

- *When turning the power OFF, turn OFF the power switch first and then the main power switch.*

Initial Actions

- Turn the power OFF and remove the Fuser Assembly. Check whether foreign substances or paper is wound around the Heat Roll.
- Check whether the MCU PWB connector P/J408 is connected properly.

Procedure

Turn the power OFF, disconnect the Main LVPS connector P/J1 and P/J2.
At the PWB, measure the resistance between P/J1-3 and P/J2-3/4. **Is the resistance infinite?**

Y **N**

Replace the Main LVPS (PL 18.1)

Replace the following parts in sequence: Replace the Fuser Assembly (PL 7.1).

- Check the sw version of the controller sw - reload Software (GP 9).
- Fuser Assembly (PL 7.1)
- MCU PWB (PL 18.1)

310-334 Heat Roll NC Sensor Broken Fail

BSD-ON:BSD 10.3 - Fusing Heat Control (2 of 2)

- The value of (Center Control Temp. Sensor temperature - Rear Control Thermistor temperature) is 90 (NVM) °C or higher 10 or more times in a row.
- The value of (Rear Control Thermistor temperature - Center Control Temp. Sensor temperature) is 70 (NVM) °C or higher 10 or more times in a row.

NOTE: *When turning the power OFF, turn OFF the power switch first and then the main power switch.*

Procedure

1. Turn the power OFF and ON.
2. Turn the power OFF and check the following:
   - The Fuser Assembly for improper installation
   - The Drawer Connector between the Fuser Assembly and the Main Unit (DP/DJ612) for broken/bent pins, foreign substances, burns, and etc.
   - The connection between the Fuser Assembly DP/DJ612 and the MCU PWB P/J408 for open circuit, short circuit, and poor contact

   If no problems are found, replace the following parts in sequence:
   - Check the sw version of the controller sw - reload Software (GP 9).
   - Fuser Assembly (PL 7.1)
   - MCU PWB (PL 18.1)

310-335 Heat Roll NC Sensor Range Fail

BSD-ON:BSD 10.3 - Fusing Heat Control (2 of 2)

- The compensation output AD value of the Center Control Temp. Sensor was detected to be lower than 130 10 or more times in a row.
- The detection output AD value of the Center Control Temp. Sensor was detected to be lower than 150 10 or more times in a row.

NOTE: *When turning the power OFF, turn OFF the power switch first and then the main power switch.*

Procedure

1. Turn the power OFF and ON.
2. Turn the power OFF and check the following:
   - The Fuser Assembly for improper installation
   - The Drawer Connector between the Fuser Assembly and the Main Unit (DP/DJ612) for broken/bent pins, foreign substances, burns, and etc.
   - The connection between the Fuser Assembly DP/DJ612 and the MCU PWB P/J408 for open circuit, short circuit, and poor contact

   If no problems are found, replace the following parts in sequence:
   - Check the sw version of the controller sw - reload Software (GP 9).
   - Fuser Assembly (PL 7.1)
   - MCU PWB (PL 18.1)

310-337 Heat Roll Paper Wrap

BSD-ON:BSD 10.3 - Fusing Heat Control (2 of 2)

From the monitor value of the Rear Control Thermistor and Center Control Temp. Sensor, it was detected that paper is wound around the Heat Roll.

NOTE: •

To clear this fault, first remove the cause, next clear the value of NVM [744-248] to "0", and then turn the power OFF then ON.

The flag of NVM [744-248] indicates 0: Normal, 1: NCS-Center abnormal high temperature value, 2: STS-Rear abnormal high temperature value, and 3: NCS and STS high temperature error.

- *When turning the power OFF, turn OFF the power switch first and then the main power switch.*

Procedure

1. Remove the jammed paper.
2. Clear the history at the NVM then turn the power OFF and ON.
3. Check whether out of spec paper is being used (Refer to the Recommended Material List (RML)). If no problems are found, replace the Fuser Assembly (PL 7.1).

310-338 Fuser On Time Fail

BSD-ON:BSD 10.2 - Fusing Heat Control (1 of 2)

BSD-ON:BSD 10.3 - Fusing Heat Control (2 of 2)

The Main Lamp or Sub Lamp remained ON continuously for longer than the specified time.

NOTE: *When turning the power OFF, turn OFF the power switch first and then the main power switch.*

Procedure

1. Turn the power OFF and ON.
2. Turn the power OFF and check the following:
   - The Fuser Assembly for improper installation
   - The Drawer Connector between the Fuser Assembly and the Main Unit (DP/DJ612) for broken/bent pins, foreign substances, burns, and etc.
   - The connection between the Fuser Assembly DP/DJ612 and the Main LVPS P/J2 for open circuit, short circuit, and poor contact
   - The connection between the Fuser Assembly DP/DJ612 and the MCU PWB P/J408 for open circuit, short circuit, and poor contact

   If no problems are found, replace the following parts in sequence:
   - Check the sw version of the controller sw - reload Software as required (GP 9)
   - Fuser Assembly (PL 7.1)
   - Main LVPS (PL 18.1)
   - MCU PWB (PL 18.1)

310-379 Fuser Hot Not Ready Return Time Fail

BSD-ON:BSD 10.2 - Fusing Heat Control (1 of 2)

BSD-ON:BSD 10.3 - Fusing Heat Control (2 of 2)

The time taken to recover from High Temperature Not Ready state has exceeded the specified time.

NOTE: *When turning the power OFF, turn OFF the power switch first and then the main power switch.*

Procedure

1. Turn the power OFF and ON.
2. Turn the power OFF and check the following:
   - The Fuser Assembly for improper installation
   - The Drawer Connector between the Fuser Assembly and the Main Unit (DP/DJ612) for broken/bent pins, foreign substances, burns, and etc.
   - The connection between the Fuser Assembly DP/DJ612 and the Main LVPS P/J2 for open circuit, short circuit, and poor contact
   - The connection between the Fuser Assembly DP/DJ612 and the MCU PWB P/J408 for open circuit, short circuit, and poor contact

   If no problems are found, replace the following parts in sequence:
   - Check the sw version of the controller sw - reload Software (GP 9)
   - Fuser Assembly (PL 7.1)
   - Main LVPS (PL 18.1)
   - MCU PWB (PL 18.1)

312-132 (Integrated Finisher) Entrance Sensor ON Jam

BSD-ON:BSD 12.3 Integrated Finisher Transportation

Finisher Entrance Sensor does not turn On within a specified time after receiving the Sheet Exit command (the sheet to be ejected has turned ON the IOT Exit Sensor 1).

Initial Actions

- Check that the Finisher Entrance Sensor is properly installed and free from foreign objects and that the actuator is not broken.
- Power Off/On.

Procedure

Check the specifications of paper. **Paper is in spec.**

Y N

Replace the paper with new paper that is in spec.

Check the condition of the paper. **The paper is in normal condition without any problem that causes the paper to be bent or caught.**

Y N

Resolve any problem that causes the paper to be bent or caught.

Check the transport path for a foreign object, deformed part, and paper dust. **The transport path is in normal condition.**

Y N

Repair the deformed part(s) and remove the foreign object(s) and paper dust.

Check that the Finisher is installed properly. **The Finisher is properly installed and properly connected to the IOT.**

Y N

Reinstall the Finisher properly.

Enter dC330 [012-140]. Actuate the Finisher Entrance Sensor. **The display changes.**

Y N

Check the connections of P/J8709 and P/J8729. **P/J8709 and P/J8729 are securely connected.**

Y N

Connect P/J8709 and P/J8729 securely.

Check for an open or short circuit between P/J8709 and P/J8729. **The wires between P/J8709 and P/J8729 are OK.**

Y N

Repair the open or short circuit.

Measure the voltage between Finisher PWB P/J8709-6 (+) and GND (-). **The voltage is approx. +5VDC.**

Y N

Go to Integrated Office Finisher Wirenets and check the +5VDC circuit.

Measure the voltage between Finisher PWB P/J8709-5 (+) and GND (-). Actuate the Finisher Entrance Sensor. **The voltage changes.**

A

Y N

Replace the Finisher Entrance Sensor (PL 22.5).

Check the wires and connectors for an intermittent open or short circuit. If the problem continues, replace the Finisher PWB (PL 22.7).

Check the wires and connectors for an intermittent open or short circuit. If the problem continues, replace the Finisher PWB (PL 22.7).

312-151 (Integrated Finisher) Compiler Exit Sensor OFF Jam

BSD-ON:BSD 12.3 Integrated Finisher Transportation

The Compiler Exit Sensor does not turn Off within a specified time after it has turned On.

Initial Actions

- Check that the Compiler Exit Sensor is properly installed and free from foreign objects and that the actuator is not binding.
- Power Off/On.

Procedure

Check the specifications of paper. **Paper is in spec.**

Y N

Replace the paper with new paper that is in spec.

Check the condition of the paper. **The paper is in normal condition without any problem that causes the paper to be bent or caught.**

Y N

Resolve any problem that causes the paper to be bent or caught.

Check the transport path for a foreign object, deformed part, and paper dust. **The transport path is in normal condition with no foreign object, deformed part and paper dust.**

Y N

Repair the deformed part(s) and remove the foreign object(s) and paper dust.

Check the Transport Roll for wear, deterioration and paper dust. **The Transport Roll is in normal condition, not worn and deteriorated and with no paper dust.**

Y N

Remove the paper dust and replace the worn or deteriorated Transport Roll.

Check the drive mechanism to the Transport Roll for a deformed, broken part, and/or belt damage. **The drive mechanism is free of defects.**

Y N

Repair defects or damage to the drive mechanism.

Enter dC330 [012-150]. Actuate the Compiler Exit Sensor. **The display changes.**

Y N

Check the connections of P/J8709 and P/J8728. **P/J8709 and P/J8728 are securely connected.**

Y N

Connect P/J8709 and P/J8728 securely.

Check for an open or short circuit between P/J8709 and P/J8728. **The wire P/J8709 and P/J8728 are OK.**

Y N

Repair the open or short circuit.

A B

Measure the voltage between Finisher PWB P/J8709-3 (+) and GND (-). **The voltage is approx. +5VDC.**

Y N

Go to Integrated Office Finisher Wirenets and check the +5VDC circuit.

Measure the voltage between Finisher PWB P/J8709-2 (+) and GND (-). Actuate the Compiler Exit Sensor. **The voltage changes.**

Y N

Replace the Compiler Exit Sensor (PL 22.5).

Check the wires and connectors for an intermittent open or short circuit. If the problem continues, replace the Finisher PWB (PL 22.7).

Enter [012-095]. **The Finisher Transport Motor rotates.**

Y N

Check the connections of P/J8706 and P/J8739 **Integrated Finisher +24VDC Wirenet**. **P/J8706 and P/J8739 are securely connected.**

Y N

Connect P/J8706 and P/J8739 securely.

Check for an open or short circuit between P/J8706 and P/J8739. **The wire between P/J8706 and P/J8739 are OK.**

Y N

Repair the open or short circuit.

Measure the voltage between Finisher PWB P/J8706-5 (+) and GND (-), and P/J8706-7 (+) and GND (-). **Each voltage is approx. +24VDC.**

Y N

Go to Integrated Office Finisher Wirenets and check the +24VDC circuit.

Check the wires and connectors for an intermittent open or short circuit. If the problem continues, replace the Finisher Transport Motor (PL 22.4). If the problem persists, replace the Finisher PWB (PL 22.7).

Enter [012-013]. **When the Sub Paddle Solenoid is turned On/Off, the Sub Paddle Shaft Assembly goes down/up.**

Y N

Check the Sub Paddle mechanism for a deformed or broken part and not-seated gears. **The Sub Paddle mechanism is free from defects and gears are seating properly.**

Y N

Repair defeats to the Sub Paddle mechanism.

Check the connections of P/J8705 and P/J8734. **P/J8705 and P/J8734 are securely connected.**

Y N

Connect P/J8705 and P/J8734 securely.

Check for an open or short circuit between P/J8705 and P/J8734. **The wires between P/J8705 and P/J8734 are OK.**

Y N

Repair the open or short circuit.

C D

Measure the voltage between Finisher PWB P/J8705-1 (+) and GND (-). **The voltage is approx. +24VDC.**

Y N

Go to Integrated Office Finisher Wirenets and check the +24VDC circuit. If the circuit is OK, replace the Finisher PWB (PL 22.7).

Enter [012-013], measure the voltage between Finisher PWB P/J8705-2 (+) and GND (-). **The voltage changes.**

Y N

Replace the Finisher PWB (PL 22.7).

Replace the Sub Paddle Solenoid (PL 22.3).

Check the wires and connectors for an intermittent open or short circuit. If the problem continues, replace the Finisher PWB (PL 22.7).

312-152 (Integrated Finisher) Compiler Exit Sensor ON Jam

BSD-ON:BSD 12.3 Integrated Finisher Transportation

The Compiler Exit Sensor does not turn On within a specified time after receiving the Sheet Exit command (the paper to be ejected has turned On the IOT Exit Sensor 1).

Initial Actions

- Check that the Compiler Exit Sensor is properly installed and free from foreign objects and that the actuator is not broken.
- Power Off/On.

Procedure

Check the specifications of paper. **Paper is in spec.**

Y N

Replace the paper with new paper that is ins spec.

Check the condition of the paper. **The paper is in normal condition without any problem that causes the paper to be bent or caught.**

Y N

Resolve any problem that causes the paper to be bent or caught.

Check the transport path for a foreign object, deformed part, and paper dust. **The transport path is in normal condition with no foreign object, deformed part and paper dust.**

Y N

Repair the deformed part(s) and remove the foreign object(s) and paper dust.

Check the Transport Roll for wear, deterioration and paper dust. **The Transport Roll is in normal condition.**

Y N

Remove the paper dust and replace the worn or deteriorated Transport Roll.

Check the drive mechanism to the Transport Roll for a deformed parts, broken parts, and/or belt damage. **The drive mechanism free from defects.**

Y N

Repair defects or damage to the drive mechanism.

Check that the Finisher is installed properly. **The Finisher is properly installed and properly connected to the IOT.**

Y N

Reinstall the Finisher properly.

Enter dC330 [012-150]. Actuate the Compiler Exit Sensor. **The display changes.**

Y N

Check the connections of P/J8709 and P/J8728. **P/J8709 and P/J8728 are securely connected.**

Y N

Connect P/J8709 and P/J8728 securely.

A B

A B

Check for an open or short circuit between P/J8709 and P/J8728. **The wires between J 8709 and P/J8728 are OK.**

Y N

Repair the open or short circuit.

Measure the voltage between Finisher PWB P/J8709-3 (+) and GND (-). **The voltage is approx. +5VDC.**

Y N

Go to Integrated Office Finisher Wirenets and check the +5VDC circuit.

Measure the voltage between Finisher PWB P/J8709-2 (+) and GND (-). Actuate the Compiler Exit Sensor. **The voltage normally changes.**

Y N

Replace the Compiler Exit Sensor (PL 22.5).

Check the wires and connectors for an intermittent open or short circuit. If the problem continues, replace the Finisher PWB (PL 22.7).

Enter [012-095]. **The Finisher Transport Motor rotates.**

Y N

Check the connections of P/J8706 and P/J8739. **P/J8706 and P/J8739 are securely connected.**

Y N

Connect P/J8706 and P/J8739 securely.

Check for an open or short circuit between P/J8706 and P/J8739. **The wire between P/J8706 and P/J8739 are OK.**

Y N

Repair the open or short circuit.

Measure the voltage between Finisher PWB P/J8706-5 (+) and GND (-), and P/J8706-7 (+) and GND (-). **Each voltage is approx. +24VDC.**

Y N

Go to Integrated Office Finisher Wirenets and check the +24VDC circuit.

Check the wires and connectors for an intermittent open or short circuit. If the problem continues, replace the Finisher Transport Motor (PL 22.4). If the problem persists, replace the Finisher PWB (PL 22.7).

Check the wires and connectors for an intermittent open or short circuit. If the problem continues, replace the Finisher PWB (PL 22.7).

312-161 (Integrated Finisher) Set Eject Jam

BSD-ON:BSD 12.2 IOT - Integrated Finisher Communication

In the Eject Motor's ejecting operation, Eject Home Sensor ON was detected within a specified time after the start of the reverse operation of the Eject Motor.

(The Eject Motor should have ejected paper, but returned Home earlier than specified.)

Initial Actions

- Check the Eject Home Sensor is properly installed, not broken, and has no foreign object.
- Power Off/On.

Procedure

Check the specifications of paper. **Paper is in spec.**

Y N

Replace the paper with new paper that is in spec.

Check the condition of the paper. **The paper is in normal condition without any problem that causes the paper to be bent or caught.**

Y N

Resolve any problem that causes the paper to be bent or caught.

Check the Eject mechanism for deformed parts, broken parts, and/or belt damage. **The Eject mechanism free from defects.**

Y N

Repair the Eject mechanism.

Enter dC330 [012-252]. Block and unblock the Eject Home Sensor with a piece of paper. **The display changes.**

Y N

Check the connections of P/J8700 and P/J8725. **P/J8700 and P/J8725 are securely connected.**

Y N

Connect P/J8700 and P/J8725 securely.

Check for an open or short circuit between P/J8700 and P/J8725. **The wires between P/J8700 and P/J8725 are OK.**

Y N

Repair the open or short circuit.

Measure the voltage between Finisher PWB P/J8700-9 (+) and GND (-). **The voltage is approx. +5VDC.**

Y N

Go to Integrated Office Finisher Wirenets and check the +5VDC circuit.

Measure the voltage between Finisher PWB P/J8700-2 (+) and GND (-). Block and unblock the Eject Home Sensor with a piece of paper. **The voltage changes.**

Y N

Replace the Eject Home Sensor (PL 22.10).

A B

A B

Check the wires and connectors for an intermittent open or short circuit. If the problem continues, replace the Finisher PWB (PL 22.7).

Enter [012-054] and [012-056] alternately. **The Eject Motor rotates.**

Y N

Check the connections of P/J8706 and P/J8741. **P/J8706 and P/J8741 are securely connected.**

Y N

Connect P/J8706 and P/J8741 securely.

Check for an open or short circuit between P/J8706 and P/J8741. **The wires between P/J8706 and P/J8741 are OK.**

Y N

Repair the open or short circuit.

Measure the voltage between Finisher PWB P/J8706-13 (+) and GND (-), and between P/J8706-15 (+) and GND (-). **The voltage is approx. +24VDC.**

Y N

Go to Integrated Office Finisher Wirenets and check the +24VDC circuit.

Check the Eject Motor drive mechanism for deformed parts, broken parts, and/or belt damage **The drive mechanism free from defects.**

Y N

Repair defects or damage to the drive mechanism.

Replace the Eject Motor (PL 22.9). If the problem continues, replace the Finisher PWB (PL 22.7).

Check the wires and connectors for an intermittent open or short circuit. If the problem continues, replace the Finisher PWB (PL 22.7).

312-210 (Integrated Finisher) NVM Fail

BSD-ON:BSD 12.2 IOT - Integrated Finisher Communication

When error occurs, NVM cannot be normally accessed.

Initial Actions

Procedure

Check the following:

- Switch off the power and switch on the power.
- Initialize NVM using dC301
- Reload or upgrade Controller firmware using GP 9.
- Replace the Finisher PWB (PL 22.7)
- Replace the MCU PWB (PL 18.1)

312-211 (Integrated Finisher) Stacker Tray Fail

BSD-ON:BSD 12.8 Integrated Finisher Stacker Tray Control

- Within a specified time after the Stacker Tray started lifting up, the Stack Height Sensor did not detect the lifting up of the Stacker Tray.
- Within a specified time after the Stacker Tray started going down at initialization and during a job, the lower position of the tray (Full) could not be detected based on the changes in the Stacker Stack Sensor 1 and the Stacker Stack Sensor 2.

Initial Actions

- Check that the Stack Height Sensor is properly installed, not broken, and has no foreign object.
- Check that the Stacker Stack Sensors 1 and 2 are properly installed and have no foreign objects and that their actuators are not broken.
- Power Off/On.

Procedure

Check the drive mechanism to the Stacker Tray for a deformed or broken part and not-seated gears. **The mechanism is free from defects and the gears seat properly.**

Y N

Repair the mechanism.

Enter dC330 [012-267]. Block and unblock the Stack Height Sensor with a piece of paper. **The display changes.**

Y N

Check the connections of P/J8708 and P/J8727. **P/J8708 and P/J8727 are securely connected.**

Y N

Connect P/J8708 and P/J8727 securely.

Check for an open or short circuit between P/J8708 and P/J8727. **The wire between P/J8708 and P/J8727 are OK.**

Y N

Repair the open or short circuit.

Measure the voltage between Finisher PWB P/J8708-3 (+) and GND (-). **The voltage is approx. +5VDC.**

Y N

Go to Integrated Office Finisher Wirenets and check the +5VDC circuit.

Measure the voltage between Finisher PWB P/J8708-2 (+) and GND (-). Block and unblock the Stack Height Sensor with a piece of paper. **The voltage changes.**

Y N

Replace the Stack Height Sensor (PL 22.10).

Check the wires and connectors for an intermittent open or short circuit. If the problem continues, replace the Finisher PWB (PL 22.7).

Enter [012-278]. Block and unblock the Stacker Stack Sensor 1 by rotating the actuator. **The display changes.**

Y N

Check the connections of P/J8707 and P/J8722. **P/J8707 and P/J8722 are securely connected.**

Y N

Connect P/J8707 and P/J8722 securely.

Check for an open or short circuit between P/J8707 and P/J8722. **The wires between P/J8707 and P/J8722 are OK.**

Y N

Repair the open or short circuit.

Measure the voltage between Finisher PWB P/J8707-6 (+) and GND (-). **The voltage is approx. +5VDC.**

Y N

Go to Integrated Office Finisher Wirenets and check the +5VDC circuit.

Measure the voltage between Finisher PWB P/J8707-5 (+) and (-). Block and unblock the Stacker Stack Sensor 1 by rotating the actuator. **The voltage changes.**

Y N

Replace the Stacker Stack Sensor 1 (PL 22.8).

Check the wires and connectors for an intermittent open or short circuit. If the problem continues, replace the Finisher PWB (PL 22.7).

Enter [012-279]. Block and unblock the Stacker Stack Sensor 2 by rotating the actuator. **The display changes.**

Y N

Check the connections of P/J8707 and P/J8721. **P/J8707 and P/J8721 are securely connected.**

Y N

Connect P/J8707 and P/J8721 securely.

Check for an open or short circuit between P/J8707 and P/J8721. **The wires between P/J8707 and P/J8721 are OK.**

Y N

Repair the open or short circuit.

Measure the voltage between Finisher PWB P/J8707-3 (+) and GND (-). **The voltage is approx. +5VDC.**

Y N

Go to Integrated Office Finisher Wirenets and check the +5VDC circuit.

Measure the voltage between Finisher PWB P/J8707-2 (+) and GND (-). Block and unblock the Stacker Stack Sensor 2 by rotating the actuator. **The voltage changes.**

Y N

Replace the Stacker Stack Sensor 2 (PL 22.8).

Check the wires and connectors for an intermittent open or short circuit. If the problem continues, replace the Finisher PWB (PL 22.7).

Enter [012-060] and [012-061] alternately. **The Stacker Motor rotates.**

Y N

Check the connections of P/J8711 and P/J8736. **P/J8711 and P/J8736 are securely connected.**

Y N

Connect P/J8711 and P/J8736 securely.

Check for an open or short circuit between P/J8711 and P8736. **The wires between P/J8711 and P8736 are OK.**

Y N

Repair the open or short circuit.

Enter [012-060], measure the voltage between Finisher PWB P/J8711-1 (+) and GND (-). **The voltage changes.**

Y N

Go to Integrated Office Finisher Wirenets and check the +24VDC circuit. If the problem continues, replace the Finisher PWB (PL 22.7).

Enter [012-061], measure the voltage between Finisher PWB P/J8711-2 (+) and GND (-). **The voltage changes.**

Y N

Go to Integrated Office Finisher Wirenets and check the +24VDC circuit. If the problem continues, replace the Finisher PWB (PL 22.7).

Check the wires and connectors for an intermittent open and short circuit. If the problem continues, replace the Stacker Motor (PL 22.8).

Check the wires and connectors for an intermittent open or short circuit. If the problem continues, replace the Finisher PWB (PL 22.7).

312-221 (Integrated Finisher) Front Tamper Home Sensor ON Fail

BSD-ON:BSD 12.4 Integrated Finisher tamping and Offset

During the moving of the Front Tamper to the home position, when the Front Tamper Home Sensor was Off, the Front Tamper Home Sensor did not turn On within a specified time after the Front Tamper started moving.

Initial Actions

- Check that the Front Tamper Home Sensor is properly installed and has no foreign object and that the actuator is not broken.
- Power Off/ON.

Procedure

Check the Front Tamper for any foreign object, deformation or binding that prevents it from moving. **The Front Tamper is free from defects or binding and there is no foreign object.**

Y N

Repair the deformation and remove the foreign object(s) and the binding.

Check the drive mechanism to the Front Tamper for a deformed or broken part and not-seated gears. **The drive mechanism is free from defects and the gears seat properly.**

Y N

Repair the Front Tamper mechanism.

Enter dC330 [012-220]. Move the Front Tamper by hand to block and unblock the Front Tamper Home Sensor. **The display changes.**

Y N

Check the connections of P/J8700 and P/J8724. **P/J8700 and P/J8724 are securely connected.**

Y N

Connect P/J8700 and P/J8724 securely.

Check for an open or short circuit between P/J8700 and P/J8724. **The wires between P/J8700 and P/J8724 are OK.**

Y N

Repair the open wire or short circuit.

Measure the voltage between Finisher PWB P/J8700-6 (+) and GND (-). **The voltage is approx. +5VDC.**

Y N

Go to Integrated Office Finisher Wirenets and check the +5VDC circuit.

Measure the voltage between Finisher PWB P/J8700-5 (+) and GND (-). Move the Front Tamper by hand to block and unblock the Front Tamper Home Sensor. **The voltage changes.**

Y N

Replace the Front Tamper Home Sensor (PL 22.10).

A B

A B

Check the wires and connectors for an intermittent open or short circuit. If the problem continues, replace the Finisher PWB (PL 22.7).

Enter [012-020] and [012-023] alternately. **The Front Tamper Motor rotates.**

Y N

Check the connections of P/J8710, J8738A and P/J8738B. **P/J8710, J8738A and J8738B are securely connected.**

Y N

Connect P/J8710, J8738A and P/J8738B securely.

Check for an open or short circuit between P/J8710, J8738A and J8738B. **The wires between are OK.**

Y N

Repair the open or short circuit.

Measure the voltage between Finisher PWB P/J8710-5 (+) and GND (-), and between P/J8710-7 (+) and GND (-). **The voltage is approx. +24VDC.**

Y N

Go to Integrated Office Finisher Wirenets and check the +24VDC circuit. If the problem continues, replace the Finisher PWB (PL 22.7).

Replace the Front Tamper Motor (PL 22.10). If the problem continues, replace the Finisher PWB (PL 22.7).

Check the wires and connectors for an intermittent open or short circuit. If the problem continues, replace the Finisher PWB (PL 22.7).

312-223 (Integrated Finisher) Front Tamper Home Sensor OFF Fail

BSD-ON:BSD 12.4 Integrated Finisher tamping and Offset

- At the end of the operation to turn Off the Front Tamper Home Sensor that was On, the Front Tamper Home Sensor was not detected being Off.
- The Front Tamper Home Sensor should have turned Off and then the Front Tamper Motor stopped, but the Front Tamper Home Sensor was On.

Initial Actions

- Check that the Front Tamper Home Sensor is properly installed and has no foreign object and that the actuator is not broken.
- Power Off/ON.

Procedure

Check the Front Tamper for any foreign object, deformation and binding that prevents it from moving. **The Front Tamper is free from defects and binding.**

Y N

Repair the deformation and remove the foreign object(s) and the binding.

Check the drive mechanism to the Front Tamper for a deformed or broken part and not-seated gears. **The drive mechanism is free from defects and the gears seat properly.**

Y N

Repair the Front Tamper drive mechanism.

Enter dC330 [012-220]. Move the Front Tamper by hand to block and unblock the Front Tamper Home Sensor. **The display changes.**

Y N

Check the connections of P/J8700 and P/J8724. **P/J8700 and P/J8724 are securely connected.**

Y N

Connect P/J8700 and P/J8724 securely.

Check for an open or short circuit between P/J8700 and P/J8724. **The wires between P/J8700 and P/J8724 are OK.**

Y N

Repair the open or short circuit.

Measure the voltage between Finisher PWB P/J8700-6 (+) and GND (-). **The voltage is approx. +5VDC.**

Y N

Go to Integrated Office Finisher Wirenets and check the +5VDC circuit.

Measure the voltage between Finisher PWB P/J8700-5 (+) and GND (-). Move the Front Tamper by hand to block and unblock the Front Tamper Home Sensor. **The voltage changes.**

Y N

Replace the Front Tamper Home Sensor (PL 22.10).

A B

A B

Check the wires and connectors for an intermittent open or short circuit. If the problem continues, replace the Finisher PWB (PL 22.7).

Enter [012-020] and [012-023] alternately. **The Front Tamper Motor rotates.**

Y N

Check the connections of P/J8710, J8738A and P/J8738B. **P/J8710, J8738A and J8738B are securely connected.**

Y N

Connect P/J8710, J8738A and P/J8738B securely.

Check for an open wire or short circuit between P/J8710, J8738A and J8738B. **The wire between P/J8710, J8738A and J8738B are OK.**

Y N

Repair the open wire or short circuit.

Measure the voltage between Finisher PWB P/J8710-5 (+) and GND (-), and between P/J8710-7 (+) and GND (-). **Each voltage is approx. +24VDC.**

Y N

Go to Integrated Office Finisher Wirenets and check the +24VDC circuit. If the problem continues, replace the Finisher PWB (PL 22.7).

Replace the Front Tamper Motor (PL 22.10). If the problem continues, replace the Finisher PWB (PL 22.7).

Check the wires and connectors for an intermittent open or short circuit. If the problem continues, replace the Finisher PWB (PL 22.7).

312-224 (Integrated Finisher) Rear Tamper Home Sensor OFF Fail

BSD-ON:BSD 12.4 Integrated Finisher tamping and Offset

- At the end of the operation of trying to turn Off the Rear Tamper Home Sensor that was On, the Rear Tamper Home Sensor was not detected being Off.
- The Rear Tamper Home Sensor should have turned Off and then the Rear Tamper Motor stopped, but the Rear Tamper Home Sensor was On.

Initial Actions

- Check that the Rear Tamper Home Sensor is properly installed and has no foreign object and that the actuator is not broken.
- Power Off/ON.

Procedure

Check the Rear Tamper for any foreign object, deformation and binding that prevents it from moving. **The Rear Tamper is free from defects and binding.**

Y N

Repair the deformation and remove the foreign object(s) and the binding.

Check the drive mechanism to the Rear Tamper for a deformed or broken part and not-seated gears. **The drive mechanism is in normal condition, not deformed or broken and with no not-seated gears.**

Y N

Repair the Rear Tamper drive mechanism.

Enter dC330 [012-221]. Move the Rear Tamper by hand to block and unblock the Rear Tamper Home Sensor. **The display of changes.**

Y N

Check the connections of P/J8700 and P/J8726. **P/J8700 and P/J8726 are securely connected.**

Y N

Connect P/J8700 and P/J8726 securely.

Check for an open or short circuit between P/J8700 and P/J8726. **The wires between P/J8700 and P/J8726 are OK.**

Y N

Repair the open wire or short circuit.

Measure the voltage between Finisher PWB P/J8700-12 (+) and GND (-). **The voltage is approx. +5VDC.**

Y N

Go to Integrated Office Finisher Wirenets and check the +5VDC circuit.

Measure the voltage between Finisher PWB P/J8700-11 (+) and GND (-). Move the Rear Tamper by hand to block and unblock the Rear Tamper Home Sensor. **The voltage changes.**

Y N

Replace the Rear Tamper Home Sensor (PL 22.9).

A B

A B

Check the wires and connectors for an intermittent open or short circuit. If the problem continues, replace the Finisher PWB (PL 22.7).

Enter [012-026] and [012-029] alternately. **The Rear Tamper Motor rotates.**

Y N

Check the connections of P/J8710, J8737A and P/J8738B. **P/J8710, J8737A and P/J8738B are securely connected.**

Y N

Connect P/J8710, J8737A and P/J8738B securely.

Check for an open wire or short circuit between P/J8710, J8737A and J8737B. **The wire between P/J8710, J8737A and J8737B are OK.**

Y N

Repair the open or short circuit.

Measure the voltage between Finisher PWB P/J8710-1 (+) and GND (-), and between P/J8710-3 (+) and GND (-). **The voltage is approx. +24VDC.**

Y N

Go to Integrated Office Finisher Wirenets and check the +24VDC circuit. If the problem continues, replace the Finisher PWB (PL 22.7).

Repair the Rear Tamper Motor (PL 22.10). If the problem continues, replace the Finisher PWB (PL 22.7).

Check the wires and connectors for an intermittent open or short circuit. If the problem continues, replace the Finisher PWB (PL 22.7).

312-259 (Integrated Finisher) Eject Home Sensor ON Fail

BSD-ON:BSD 12.6 Integrated Finisher Set Eject (1 of 2)

In the Eject Motor's initializing operation and ejecting operation, one of the following occurs:

- With the Eject Home Sensor Off, the Eject Motor started rotating in reverse direction. Within a specified time after that, the Eject Home Sensor was not detected turning On.
- With the Eject Home Sensor Off, the Eject Motor started rotating in reverse direction. The Eject Home Sensor should have been detected turning On and then the Eject Motor stopped, but then the Eject Home Sensor was not On.

Initial Actions

- Check the Eject Home Sensor is properly installed, not broken and has no foreign object.
- Power Off/ON.

Procedure

Check the Eject mechanism for a deformed or broken part and not-seated belts. **The mechanism is free from defects and belt damage.**

Y N

Repair the mechanism.

Enter dC330 [012-252]. Block and unblock the Eject Home Sensor. **The display changes.**

Y N

Check the connections of P/J8700 and P/J8725. **P/J8700 and P/J8725 are securely connected.**

Y N

Connect P/J8700 and P/J8725 securely.

Check for an open wire or short circuit between P/J8700 and P/J8725. **The wire between P/J8700 and P/J8725 is normally conductive with no open wire or short circuit.**

Y N

Repair the open wire or short circuit.

Measure the voltage between Finisher PWB P/J8700-9 (+) and GND (-). **The voltage is approx. +5VDC.**

Y N

Go to Integrated Office Finisher Wirenets and check the +5VDC circuit.

Measure the voltage between Finisher PWB P/J8700-2 (+) and GND (-). Block and unblock the Eject Home Sensor. **The voltage changes**

Y N

Replace the Eject Home Sensor (PL 22.10).

Check the wires and connectors for an intermittent open or short circuit. If the problem continues, replace the Finisher PWB (PL 22.7).

Enter [012-054] and [012-056] alternately. **The Eject Motor rotates.**

Y N

Check the connections of P/J8706 and P/J8741. **P/J8706 and P/J8741 are securely connected.**

Y N

Connect P/J8706 and P/J8741 securely.

Check for an open or short circuit between P/J8706 and P/J8741. **The wires between P/J8706 and P/J8741 are OK.**

Y N

Repair the open wire or short circuit.

Measure the voltage between Finisher PWB P/J8706-13 (+) and GND (-), and between P/J8706-15 (+) and GND (-). **Each voltage is approx. +24VDC.**

Y N

Go to Integrated Office Finisher Wirenets and check the +24VDC circuit. If the problem continues, replace the Finisher PWB (PL 22.7).

Replace the Eject Motor (PL 22.9). If the problem continues, replace the Finisher PWB (PL 22.7).

Check the wires and connectors for an intermittent open or short circuit. If the problem continues, replace the Finisher PWB (PL 22.7).

312-263 (Integrated Finisher) Rear Tamper Home Sensor ON Fail

BSD-ON:BSD 12.4 Integrated Finisher tamping and Offset

During the moving of the Rear Tamper from when the Rear Tamper Home Sensor was Off to the home position, the Rear Tamper Home Sensor was not detected turning On within a specified time after the Rear Tamper started moving.

Initial Actions

- Check that the Rear Tamper Home Sensor is properly installed and has no foreign object and that the actuator is not broken.
- Power Off/ON.

Procedure

Check the Rear Tamper for any foreign object, deformation and binding that prevents it from moving. **The Rear Tamper is free from defects and binding.**

Y N

Repair the deformation and remove the foreign object(s) and the binding.

Check the drive mechanism to the Rear Tamper for a deformed or broken part and not-seated gears. **The drive mechanism is free from defects and gears seat properly.**

Y N

Repair the Rear Tamper drive mechanism.

Enter dC330 [012-221]. Move the Rear Tamper by hand to block and unblock the Rear Tamper Home Sensor. **The display changes.**

Y N

Check the connections of P/J8700 and P/J8726. **P/J8700 and P/J8726 are securely connected.**

Y N

Connect P/J8700 and P/J8726 securely.

Check for an open wire or short circuit between P/J8700 and P/J8726. **The wire between P/J8700 and P/J8726 are OK.**

Y N

Repair the open or short circuit.

Measure the voltage between Finisher PWB P/J8700-12 (+) and GND (-). **The voltage is approx. +5VDC.**

Y N

Go to Integrated Office Finisher Wirenets and check the +5VDC circuit.

Measure the voltage between Finisher PWB P/J8700-11 (+) and GND (-). Move the Rear Tamper by hand to block and unblock the Rear Tamper Home Sensor. **The voltage changes.**

Y N

Replace the Rear Tamper Home Sensor (PL 22.9).

A B

A B

Check the wires and connectors for an intermittent open or short circuit. If the problem continues, replace the Finisher PWB (PL 22.7).

Enter [012-026] and [012-029] alternately. **The Rear Tamper Motor rotates.**

Y N

Check the connections of P/J8710, J8737A and P/J8738B. **P/J8710, J8737A and P/J8738B are securely connected.**

Y N

Connect P/J8710, J8737A and P/J8738B securely.

Check for an open or short circuit between P/J8710, J8737A and J8737B. **The wires between P/J8710, J8737A and J8737B are OK.**

Y N

Repair the open or short circuit.

Measure the voltage between Finisher PWB P/J8710-1 (+) and GND (-), and between P/J8710-3 (+) and GND (-). **Each voltage is approx. +24VDC.**

Y N

Go to Integrated Office Finisher Wirenets and check the +24VDC circuit. If the problem continues, replace the Finisher PWB (PL 22.7).

Replace the Rear Tamper Motor (PL 22.10). If the problem continues, replace the Finisher PWB (PL 22.7).

Check the wires and connectors for an intermittent open or short circuit. If the problem continues, replace the Finisher PWB (PL 22.7).

312-280 (Integrated Finisher) Eject Home Sensor OFF Fail

BSD-ON:BSD 12.6 Integrated Finisher Set Eject (1 of 2)

In the Eject Motor's initializing operation and ejecting operation, the Eject Motor had rotated forward for a time corresponding to a specified number of pulses after the Eject Home Sensor was On, and then the motor stopped, but then the Eject Home Sensor was not detected turning Off.

Initial Actions

- Check that the Eject Home Sensor is properly installed, not broken and has no foreign object.
- Power Off/ON.

Procedure

Check the Eject mechanism for a deformed or broken part and not-seated belts. **The mechanism is free from defects and belt damage.**

Y N

Repair the mechanism.

Enter dC330 [012-252]. Block and unblock the Eject Home Sensor with a piece of paper. **The display changes.**

Y N

Check the connections of P/J8700 and P/J8725. **P/J8700 and P/J8725 are securely connected.**

Y N

Connect P/J8700 and P/J8725 securely.

Check for an open or short circuit between P/J8700 and P/J8725. **The wires between P/J8700 and P/J8725 are OK.**

Y N

Repair the open or short circuit.

Measure the voltage between Finisher PWB P/J8700-9 (+) and GND (-). **The voltage is approx. +5VDC.**

Y N

Go to Integrated Office Finisher Wirenets and check the +5VDC circuit.

Measure the voltage between Finisher PWB P/J8700-2 (+) and GND (-). Block and unblock the Eject Home Sensor with a piece of paper. **The voltage changes.**

Y N

Replace the Eject Home Sensor (PL 22.10).

Check the wires and connectors for an intermittent open or short circuit. If the problem continues, replace the Finisher PWB (PL 22.7).

Enter [012-054] and [012-056] alternately. **The Eject Motor rotates.**

Y N

Check the connections of P/J8706 and P/J8741. **P/J8706 and P/J8741 are securely connected.**

A

A

Y N

Connect P/J8706 and P/J8741 securely.

Check for an open or short circuit between P/J8706 and P/J8741. **The wires between P/J8706 and P/J8741 are OK.**

Y N

Repair the open or short circuit.

Measure the voltage between Finisher PWB P/J8706-13 (+) and GND (-), and between P/J8706-15 (+) and GND (-). **Each voltage is approx. +24VDC.**

Y N

Go to Integrated Office Finisher Wirenets and check the +24VDC circuit. If the problem continues, replace the Finisher PWB (PL 22.7).

Replace the Eject Motor (PL 22.9). If the problem continues, replace the Finisher PWB (PL 22.7).

Check the wires and connectors for an intermittent open or short circuit. If the problem continues, replace the Finisher PWB (PL 22.7).

312-283 (Integrated Finisher) Set Clamp Home Sensor ON Fail

BSD-ON:BSD 12.7 Integrated Finisher Set Eject (2 of 2)

In the initialize operations each at Power On, when Interlock closed and at the start of a job, and in the Set Clamp Motor's ejecting operation, the Set Clamp Home Sensor was not detected turning On within a specified time after the start of the Set Clamp Motor operation.

Initial Actions

- Check that the Set Clamp Home Sensor is properly installed and has no foreign object and that the actuator is not broken.
- Power Off/ON.

Procedure

Check the Set Clamp mechanism for a deformed or broken part and not-seated belts. **The mechanism is free from defects and belt damage.**

Y N

Repair the Set Clamp mechanism.

Enter dC330 [012-251]. Rotate the Set Clamp Shaft by hand to block and unblock the Set Clamp Home Sensor. **The display changes.**

Y N

Check the connections of P/J8707, P/J8742B, P/J8742A and P/J8723. **P/J8707, P/J8742B, P/J8742A and P/J8723 are securely connected.**

Y N

Connect P/J8707, P/J8742B, P/J8742A and P/J8723 securely.

Check for an open or short circuit between P/J8707 and J8742B, and between J8742A and P/J8723. **The wires between P/J8707 and J8742B and between J8742A and P/J8723 are OK.**

Y N

Repair the open or short circuit.

Measure the voltage between Finisher PWB P/J8707-9 (+) and GND (-). **The voltage is approx. +5VDC.**

Y N

Go to Integrated Office Finisher Wirenets and check the +5VDC circuit.

Measure the voltage between Finisher PWB P/J8707-8 (+) and GND (-). Rotate the Set Clamp Shaft by hand to block and unblock the Set Clamp Home Sensor. **The voltage changes.**

Y N

Replace the Set Clamp Home Sensor (PL 22.4).

Check the wires and connectors for an intermittent open or short circuit. If the problem continues, replace the Finisher PWB (PL 22.7).

Enter [012-017]. **The Set Clamp Motor rotates.**

Y N

Check the connections of P/J8708 and P/J8740. **P/J8708 and P/J8740 are securely connected.**

Y N

Connect P/J8708 and P/J8740 securely.

Check for an open or short circuit between P/J8708 and P/J8740. **The wires between P/J8708 and P/J8740 are OK.**

Y N

Repair the open or short circuit.

Measure the voltage between Finisher PWB P/J8708-9 (+) and GND (-), and between P/J8708-11 (+) and GND (-). **Each voltage is approx. +24VDC.**

Y N

Go to Integrated Office Finisher Wirenets and check the +24VDC circuit. If the problem continues, replace the Finisher PWB (PL 22.7).

Replace the Set Clamp Motor (PL 22.9). If the problem continues, replace the Finisher PWB (PL 22.7).

Check the wires and connectors for an intermittent open or short circuit. If the problem continues, replace the Finisher PWB (PL 22.7).

312-284 (Integrated Finisher) Set Clamp Home Sensor OFF Fail

BSD-ON:BSD 12.7 Integrated Finisher Set Eject (2 of 2)

In the initialize operations each at Power On, when Interlock closed and at the start of a job, and in the Set Clamp Motor's ejecting operation, the Set Clamp Home Sensor was not detected turning Off within a specified time after the start of the Set Clamp Motor operation.

Initial Actions

- Check that the Set Clamp Home Sensor is properly installed and has no foreign object and that the actuator is not broken.
- Power Off/ON.

Procedure

Check the Set Clamp mechanism for a deformed or broken part and not-seated belts. **The mechanism is free from defects and belt damage.**

Y N

Repair the Set CLamp mechanism.

Enter dC330 [012-251]. Rotate the Set Clamp Shaft by hand to block and unblock the Set Clamp Home Sensor. **The display changes.**

Y N

Check the connections of P/J8707, P/J8742B, P/J8742A and P/J8723. **P/J8707, P/J8742B, P/J8742A and P/J8723 are securely connected.**

Y N

Connect P/J8707, P/J8742B, P/J8742A and P/J8723 securely.

Check for an open or short circuit between P/J8707 and J8742B, and between J8742A and P/J8723. **The wires between P/J8707 and J8742B and between J8742A and P/J8723 are OK.**

Y N

Repair the open or short circuit.

Measure the voltage between Finisher PWB P/J8707-9 (+) and GND (-). **The voltage is approx. +5VDC.**

Y N

Go to Integrated Office Finisher Wirenets and check the +5VDC circuit.

Measure the voltage between Finisher PWB P/J8707-8 (+) and GND (-). Rotate the Set Clamp Shaft by hand to block and unblock the acceptance surface of the Set Clamp Home Sensor. **The voltage changes normally.**

Y N

Replace the Set Clamp Home Sensor (PL 22.4).

Check the wires and connectors for an intermittent open or short circuit. If the problem continues, replace the Finisher PWB (PL 22.7).

Enter [012-017]. **The Set Clamp Motor rotates.**

Y N

Check the connections of P/J8708 and P/J8740. **P/J8708 and P/J8740 are securely connected.**

Y N

Connect P/J8708 and P/J8740 securely.

Check for an open or short circuit between P/J8708 and P/J8740. **The wires between P/J8708 and P/J8740 are OK.**

Y N

Repair the open or short circuit.

Measure the voltage between Finisher PWB P/J8708-9 (+) and GND (-), and between P/J8708-11 (+) and GND (-). **Each voltage is approx. +24VDC.**

Y N

Go to Integrated Office Finisher Wirenets and check the +24VDC circuit. If the problem continues, replace the Finisher PWB (PL 22.7).

Replace the Set Clamp Motor (PL 22.9). If the problem continues, replace the Finisher PWB (PL 22.7).

Check the wires and connectors for an intermittent open or short circuit. If the problem continues, replace the Finisher PWB (PL 22.7).

312-291 (Integrated Finisher) Stapler Fail

BSD-ON:BSD 12.5 Integrated Finisher Staple Control

Within a specified time after the Staple Motor started rotating in reverse direction, the Staple Head Home Sensor was not detected turning On.

Initial Actions

- Check that the Staple Assembly and the Cartridge are properly installed, not broken and include no foreign objects.
- Power Off/ON.

Procedure

Enter dC330 [012-046] and [012-047] alternately. **The Staple Motor rotates.**

Y N

Check the connections of P/J8705 and P/J8735. **P/J8705 and P/J8735 are securely connected.**

Y N

Connect P/J8705 and P/J8735 securely.

Check for an open or short circuit between P/J8705 and P/J8735. **The wires between P/J8705 and P/J8735 are OK.**

Y N

Repair the open wire or short circuit.

Enter [012-046] and [012-047] alternately. Measure the voltages between Finisher PWB P/J8705-3, 4, 5, 6 (+) and GND (-). **Each voltage changes.**

Y N

Check the wires and connectors for an intermittent open or short circuit. If the problem continues, replace the Finisher PWB (PL 22.7)

Replace the Staple Assembly (PL 22.4).

Enter [012-046] and [012-047] alternately. **The display changes.**

Y N

Check the connections of P/J8701 and P/J8731. **P/J8701 and P/J8731 are securely connected.**

Y N

Connect P/J8701 and P/J8731 securely.

Check for an open or short circuit between P/J8701 and P/J8731. **The wires between P/J8701 and P/J8731 are OK.**

Y N

Repair the open or short circuit.

Measure the voltage between Finisher PWB P/J8701-9 (+) and GND (-). **The voltage is approx. +5VDC.**

Y N

Go to Integrated Office Finisher Wirenets and check the +5VDC circuit.

A B

A B

Measure the voltage between Finisher PWB P/J8731-5 (+) and GND (-). Enter [012-046] and [012-047] alternately. **The voltage changes.**

Y N

Replace the Staple Assembly (PL 22.4).

Check the wires and connectors for an intermittent open or short circuit. If the problem continues, replace the Finisher PWB (PL 22.7).

Check the wires and connectors for an intermittent open or short circuit. If the problem continues, replace the Finisher PWB (PL 22.7).

312-301 (Integrated Finisher) Top Cover Interlock OPEN

BSD-ON:BSD 12.1 Integrated Finisher DC Power and Interlock Switching

The Top Cover Interlock Open was detected.

Initial Actions

- Check that the Top Cover can be opened and closed.
- Check that the Finisher Top Cover Interlock Sensor and the Finisher Top Cover Interlock +24V Switch are properly installed, not broken, and have no foreign objects
- Power Off/ON.

Procedure

Check the following;

- Top Cover installation
- Finisher Top Cover Interlock Sensor for damage
- Finisher Top Cover Interlock +24V Switch actuator for any damage

These parts are in normal condition.

Y N

Repair or replace any of the parts that has a defect.

Enter dC330 [012-300]. Open and close the Top Cover to block and unblock the Finisher Top Cover Interlock Sensor. **The display changes.**

Y N

Check the connections of P/J8701 and P/J8730. **P/J8701 and P/J8730 are securely connected.**

Y N

Connect P/J8701 and P/J8730 securely.

Check for an open or short circuit between P/J8701 and P/J8730. **The wires between P/J8701 and P/J8730 are OK.**

Y N

Repair the open or short circuit.

Measure the voltage between Finisher PWB P/J8701-3 (+) and GND (-). **The voltage is approx. +5VDC.**

Y N

Go to Integrated Office Finisher Wirenets and check the +5VDC circuit.

Measure the voltage between Finisher PWB P/J8701-2 (+) and GND (-). Open and close the Top Cover to block and unblock the Finisher Top Cover Interlock Sensor. **The voltage changes.**

Y N

Replace the Finisher Top Cover Interlock Sensor (PL 22.3).

Check the wires and connectors for an intermittent open or short circuit. If the problem continues, replace the Finisher PWB (PL 22.7).

Measure the voltage between Finisher PWB P/J8702-1 (+) and GND (-). **The voltage is approx. +24VDC.**

Y N

Go to Integrated Office Finisher Wirenets and check the +24VDC circuit. If the problem continues, replace the Finisher PWB (PL 22.7).

Check the wires and connectors for an intermittent open or short circuit. If the problem continues, replace the Finisher PWB (PL 22.7).

312-302 (Integrated Finisher) Front Cover Interlock OPEN

BSD-ON:BSD 12.1 Integrated Finisher DC Power and Interlock Switching

NOTE: *The chain/link fault code for this RAP is an internal machine code and is never displayed or logged in Fault Code History. Use this RAP to troubleshoot persistent machine status conditions that cannot be cleared by performing the indicated process (e.g., loading paper, closing a cover, replacing a CRU, etc). Entry to this RAP is usually via the Machine Status Faults RAP located in the Other Faults section, or a chain/link listing on a BSD.*

The Front Cover Interlock Open was detected.

Initial Actions

- Check that the Top Cover can be opened and closed.
- Check that the Finisher Front Interlock Switch is properly installed, not broken, and has no foreign object.
- Power Off/ON.

Procedure

Check the following;

- Front Cover installation
- hinges for any damage
- Finisher Top Cover Interlock Sensor for any damage

The above parts are OK.

Y N

Repair or replace any of the parts that are defected.

Enter dC330 [012-302]. Open and close the Front Cover to turn On and Off the Finisher Front Interlock Switch. **The display changes.**

Y N

Connect the connections of P/J8702 and P/J8733. **P/J8702 and P/J8733 are securely connected.**

Y N

Connect P/J8702 and P/J8733 securely.

Check for an open or short circuit between P/J8702 and P/J8733. **The wires between P/J8702 and P/J8733 are OK.**

Y N

Repair the open or short circuit.

Measure the voltage between Finisher PWB P/J8702-4 (+) and GND (-). Open and close the Front Cover to turn On and Off the Finisher Front Interlock Switch. **The voltage changes.**

Y N

Replace the Finisher Front Interlock Switch (PL 22.7).

Check the wires and connectors for an intermittent open or short circuit. If the problem continues, replace the Finisher PWB (PL 22.7).

A

A

Measure the voltage between Finisher PWB P/J8702-1 (+) and (-). **The voltage is approx. +24VDC.**

Y N

Go to Integrated Office Finisher Wirenets and check the +24VDC circuit.

Check the wires and connectors for an intermittent open or short circuit. If the problem continues, replace the Finisher PWB (PL 22.7).

312-334 (Integrated Finisher) Download Failure

Failure in previous download (abnormal termination during download); can only start in Download Mode upon turning power on.

Procedure

Download defective; check the following:

- Cable connection between Finisher and IOT, not connected or defective
- Finisher power cable plugged in properly
- Reload or upgrade Controller firmware using GP 9.
- Replace Finisher PWB (PL 22.7)

312-903 (Integrated Finisher) Paper Remains at Compiler Exit Sensor

BSD-ON:BSD 12.3 Integrated Finisher Transportation

- At Power On, the Compiler Exit Sensor detected paper.
- While the Main Motor was operating at initialization at Power On, the Compiler Exit Sensor detected paper.
- When the Cycle down operation at the end of a job was complete, the Compiler Exit Sensor was On.

Initial Actions

- Check the power supply voltage at the customer site for a drop.
- Check that the Compiler Exit Sensor is properly installed and free from foreign objects and that the actuator is not binding.
- Power Off/ON.

Procedure

Check for paper remaining on the Compiler Exit Sensor and how it is installed. **The sensor is properly installed with no paper left there.**

Y N

Remove the remaining paper and reinstall the sensor properly.

Enter dC330 [012-150]. Actuate the Compiler Exit Sensor. **The display changes.**

Y N

Check the connections of P/J8709 and P/J8728. **P/J8709 and P/J8728 are securely connected.**

Y N

Connect P/J8709 and P/J8728.

Check for an open or short circuit between P/J8709 and P/J8728. **The wires between P/J8709 and P/J8728 are OK.**

Y N

Repair the open or short circuit.

Measure the voltage between Finisher PWB P/J8709-3 (+) and GND (-). **The voltage is approx.+5VDC.**

Y N

Go to Integrated Office Finisher Wirenets and check the +5VDC circuit.

Measure the voltage between Finisher PWB P/J8709-2 (+) and GND (-). Actuate the Compiler Exit Sensor. **The voltage changes.**

Y N

Replace the Compiler Exit Sensor (PL 22.5).

Check the wires and connectors for an intermittent open or short circuit. If the problem continues, replace the Finisher PWB (PL 22.7).

Check the wires and connectors for an intermittent open or short circuit. If the problem continues, replace the Finisher PWB (PL 22.7).

312-916 (Integrated Finisher) Mix Full Stack

BSD-ON:BSD 1.1 - Main Power On (1 of 2)

BSD-ON:BSD 2.1 - UI

BSD-ON:BSD 3.1 - SBC - MCU Communication

BSD-ON:BSD 6.1 - Document Illumination

BSD-ON:BSD 12.8 Integrated Finisher Stacker Tray Control

BSD-ON:BSD 16.1 - SBC

NOTE: *The chain/link fault code for this RAP is an internal machine code and is never displayed or logged in Fault Code History. Use this RAP to troubleshoot persistent machine status conditions that cannot be cleared by performing the indicated process (e.g., loading paper, closing a cover, replacing a CRU, etc). Entry to this RAP is usually via the Machine Status Faults RAP located in the Other Faults section, or a chain/link listing on a BSD.*

Any of the following conditions could cause this fault:

- The output paper stacked on the Finisher Stacker Tray reaches capacity (for the same paper size only).
- The paper size in either the process or cross-process direction of the current job is larger than the top sheet size of the previous job
- The top sheet size (width) of previous job is less than 279.4mm and Staple Mode is changed
- The top sheet size of the previous job is “unknown”

Initial Actions

Power Off/On

Procedure

- Go to the 312-211 (Integrated Finisher) Stacker Tray Fail RAP.
- Ensure that the customer is programming a job within the parameters of the machine utilizing the UI.
- Disconnect then reconnect the IIT, UI I/F, SBC, MCU and all PWBs connected to them (RAM, Firmware module, EEPROM)
- Check the SW version of the controller SW - update if required (GP 9)
- Replace the MCU PWB (PL 18.1)
- Replace the Hard Drive (PL 35.2).
- Replace the SBC PWB (PL 35.2) (If not fixed by this, reinstall the original SBC PWB & MCU PWB).

312-917 (Integrated Finsher) Stacker Tray Staple Set Over Count

BSD-ON:BSD 1.1 - Main Power On (1 of 2)

BSD-ON:BSD 2.1 - UI

BSD-ON:BSD 3.1 - SBC - MCU Communication

BSD-ON:BSD 6.1 - Document Illumination

BSD-ON:BSD 12.2 IOT - Integrated Finisher Communication

BSD-ON:BSD 16.1 - SBC

NOTE: *The chain/link fault code for this RAP is an internal machine code and is never displayed or logged in Fault Code History. Use this RAP to troubleshoot persistent machine status conditions that cannot be cleared by performing the indicated process (e.g., loading paper, closing a cover, replacing a CRU, etc). Entry to this RAP is usually via the Machine Status Faults RAP located in the Other Faults section, or a chain/link listing on a BSD.*

The number of stapled copies exceeded the capacity of the Stacker Tray.

Initial Actions

- Power Off/On
- Empty the tray

Procedure

Check the connection of each Finisher PWB connector. **The connectors are securely connected.**

Y N

Connect the connectors.

Turn on the power again. **[312-917] reoccurs.**

Y N

Return to Service Call Procedures.

Replace the following in order:

1. Finisher PWB (PL 22.7)
2. MCU PWB (PL 18.1)

312-928 (Integrated Finisher) Scratch Sheet Compile

BSD-ON:BSD 12.2 IOT - Integrated Finisher Communication

Paper was detected that was either out of spec, in poor condition (wrinkled, curled) and was ejected to the compiler.

NOTE: *The chain/link fault code for this RAP is an internal machine code and is never displayed or logged in Fault Code History. Use this RAP to troubleshoot persistent machine status conditions that cannot be cleared by performing the indicated process (e.g., loading paper, closing a cover, replacing a CRU, etc). Entry to this RAP is usually via the Machine Status Faults RAP located in the Other Faults section, or a chain/link listing on a BSD.*

Initial Actions

- Check that the Top Cover can be opened and closed.
- Power Off/On.

Procedure

Check the specifications of paper. **The paper is in spec.**

Y N

Replace the paper with new paper that is in spec.

Check the condition of the paper. **The paper is in normal condition without any problem that causes the paper to be bent (dog eared) or jam.**

Y N

Resolve any problem that causes the paper to be bent or caught.

Check for a Fault Code. **Another Fault Code is displayed.**

Y N

If the problem continues, replace the Finisher PWB (PL 22.7).

Go to the appropriate Fault Code.

312-930 (Integrated Finisher) Stacker Tray Full

BSD-ON:BSD 12.8 Integrated Finisher Stacker Tray Control

NOTE: *The chain/link fault code for this RAP is an internal machine code and is never displayed or logged in Fault Code History. Use this RAP to troubleshoot persistent machine status conditions that cannot be cleared by performing the indicated process (e.g., loading paper, closing a cover, replacing a CRU, etc). Entry to this RAP is usually via the Machine Status Faults RAP located in the Other Faults section, or a chain/link listing on a BSD.*

The output paper stacked on the Finisher Stacker Tray reaches capacity (for mixed paper size). There are a number of different conditions that can cause this fault and those conditions differ for the different finishers.

Initial Actions

- Remove the paper from the Stacker Tray
- Power Off/On

Procedure

- Go to the 312-211 (Integrated Finisher) Stacker Tray Fail RAP.
- Remove the paper from the Stacker Tray
- Check the sw version of the controller sw - update if required
- Disconnect then reconnect the SBC PWB, MCU PWB all PWBs connected to them (RAM, Firmware module, EEPROM)
- If the fault is still occurring replace the Finisher PWB (PL 22.7).

312-935 (Integrated Finisher) Paper Remains at Entrance Sensor

BSD-ON:BSD 12.3 Integrated Finisher Transportation

- At Power On the Finisher Entrance Sensor detected paper.
- While the Main Motor was operating at initialization at Power On, the Finisher Entrance Sensor detected paper.
- When the Cycle down operation at the end of a job was complete, the Finisher Entrance Sensor was On.

Initial Actions

- Check the power supply voltage at the customer site for a drop.
- Check that the Finisher Entrance Sensor is properly installed and free from foreign objects and that the actuator is not binding.
- Power Off/ON.

Procedure

Check for paper remaining on the Finisher Entrance Sensor and how it is installed. **The sensor is properly installed and free from paper.**

Y N

Remove the remaining paper and reinstall the sensor properly.

Enter dC330 [012-140]. Move the Finisher Entrance Sensor actuator by hand or with a piece of paper. **The display changes.**

Y N

Check the connections of P/J8709 and P/J8729. **P/J8709 and P/J8729 are securely connected.**

Y N

Connect P/J8709 and P/J8729 securely.

Check for an open or short circuit between P/J8709 and P/J8729. **The wire between P/J8709 and P/J8729 are OK.**

Y N

Repair the open or short circuit.

Measure the voltage between P/J8709-6 (+) on the Finisher PWB and GND (-). **The voltage is approx. +5VDC.**

Y N

Go to Integrated Office Finisher Wirenets and check the +5VDC circuit.

Measure the voltage between P/J8709-5 (+) on the Finisher PWB and GND (-). Actuate the Finisher Entrance Sensor. **The voltage changes.**

Y N

Replace the Finisher Entrance Sensor (PL 22.5).

Check the wires and connectors for an intermittent open or short circuit. If the problem continues, replace the Finisher PWB (PL 22.7).

Check the wires and connectors for an intermittent open or short circuit. If the problem continues, replace the Finisher PWB (PL 22.7).

312-976 (Integrated Finisher) Staple Status Failed

BSD-ON:BSD 12.5 Integrated Finisher Staple Control

- After the Stapler Motor turned On (Forward rotation), the system did not detect that the Staple Head Home Sensor switched from Off to On within the specified time.
- After the Stapler Motor turned On (Reverse rotation), the Staple Head Home Sensor did not turn On within the specified time.

Initial Actions

- Power Off/On

Procedure

- Go to the 312-291 (Integrated Finisher) Stapler Failure RAP
- Disconnect then reconnect the SBC, MCU all PWBs connected to them (RAM, Firmware module, EEPROM)
- Check the sw version of the controller sw - update if required (GP 9)

312-977 (Integrated Finisher) Stapler Feed Ready - TBD

BSD-ON:BSD 12.5 Integrated Finisher Staple Control

Procedure

- Go to 312-291 (Integrated Finisher) Stapler Failure RAP.
- Disconnect then reconnect the SBC, MCU all PWBs connected to them (RAM, Firmware module, EEPROM)
- Check the sw version of the controller sw - update if required (GP 9)

312-982 (Integrated Finisher) Stacker Tray Lower Safety

BSD-ON:BSD 12.8 Integrated Finisher Stacker Tray Control

NOTE: *The chain/link fault code for this RAP is an internal machine code and is never displayed or logged in Fault Code History. Use this RAP to troubleshoot persistent machine status conditions that cannot be cleared by performing the indicated process (e.g., loading paper, closing a cover, replacing a CRU, etc). Entry to this RAP is usually via the Machine Status Faults RAP located in the Other Faults section, or a chain/link listing on a BSD.*

Stacker tray moved down past the lower limit position.

Initial Actions

Power Off/On

Procedure

- Go to the 312-211 (Integrated Finisher) Stacker Tray Fail RAP.
- Disconnect then reconnect the SBC, MCU all PWBs connected to them (RAM, Firmware module, EEPROM)
- Check the sw version of the controller sw - update if req (GP 9)

312-111 (LX) H-Transport Entrance Sensor Off Jam A

BSD-ON:BSD 12.6 Office Finisher LX Horizontal Transportation

The H-Transport Entrance Sensor did not turn off within the specified time after it turned on.

Initial Actions

When this fault occurs frequently check the following:

- Verify that the finsher is properly docked
- Check the surface condition of the floor on which the machine is installed for uneveness
- Ensure that no large paper curls, or large wrinkles or puckers occur when media outside of specification is used
- That the paper path is free of pieces of paper or other debris
- If H-Transport Exit Sensor failure occurs as well and whether the connector is misconnected or loosely connected
- Check the roll in the Transport Unit for nip failure wear or contamination
- Ensure that no chute is deformed or missing
- Check that the Punch Unit, or Punch Dummy Chute is not mis-installed, deformed or removed
- Verify that the Punch Pin of the Punch Unit is not mis-installed
- Check that the H-Transport Motor and it's driven parts operate normally

Procedure

Check the H-Transport Drive Rolls (PL 23.4) and Pinch Rolls (PL 23.3) for wear or contamination. Check for obstructions or damage in the paper path. **The Paper Path is OK.**

Y N

Clean or replace as required.

Execute dC330 [012-190], H-Transport Entrance Sensor. Actuate the H-Transport Entrance Sensor (PL 23.4). **The display changes.**

Y N

Check the wire between J8861 pin 2 and J8987 pin 6 for an open or short circuit, or a loose or damaged connector. **The wire is OK.**

Y N

Repair/reconnect as required.

Measure the voltage between J8987, pins 4 and 5 on the Finisher PWB. **The voltage is approximately +5VDC.**

Y N

Replace the Finisher PWB (PL 23.16).

Measure the voltage between J8987, pin 6 on the Finisher PWB and GND. Actuate the H-Transport Entrance Sensor. **The voltage changes.**

Y N

Replace the H-Transport Entrance Sensor (PL 23.4).

Replace the Finisher PWB (PL 23.16).

A

Power OFF. Open the H-Transport Top Cover. Cheat the H-Transport Interlock Sensor. Power ON. **The H-Transport Belt rotates.**

Y N

Check the wires between P/J8862 on the H-Transport Motor and J8987 on the Finisher PWB for an open or short circuit, or a loose or damaged connector. **The wires are OK.**

Y N

Repair/reconnect as required.

Measure the resistance of the H-Transport Motor between each pin P/J8862-1/2/5/6. **The resistance is approximately 20 Ohm.**

Y N

Replace the H-Transport Motor (PL 23.4).

Replace the Finisher PWB (PL 23.16). If the problem persists, replace the H-Transport Motor (PL 23.4).

Check the H-Transport Entrance Sensor and H-Transport Motor circuits for an intermittent condition. If the problem continues, replace the Finisher PWB (PL 23.16).

312-112 (LX) H-Transport Entrance Sensor On Jam A

BSD-ON:BSD 12.6 Office Finisher LX Horizontal Transportation

After the Fuser Exit Sensor turned on, the H-Transport Entrance Sensor did not turn on within the specified time.

Initial Actions

When this fault occurs frequently check the following:

- Verify that the Transport Unit is not misaligned
- Ensure that no large paper curls, or large wrinkles or puckers occur when media outside of specification is used
- That the paper path is free of pieces of paper or other debris
- If H-Transport Exit Sensor failure occurs as well and whether the connector is misconnected or loosely connected
- Check the roll in the Transport Unit for nip failure wear or contamination
- Ensure that no chute is deformed or missing
- Check that the H-Transport Cover is not deformed, damaged or has failed latches
- Check that the H-Transport Motor and it's driven parts operate normally

Procedure

Check the H-Transport Drive Rolls (PL 23.4) and Pinch Rolls (PL 23.3) for wear or contamination. Check for obstructions or damage in the paper path. **The Paper Path is OK.**

Y **N**

Clean or replace as required.

Execute dC330 [012-190], H-Transport Entrance Sensor. Actuate the H-Transport Entrance Sensor (PL 23.4). **The display changes.**

Y **N**

Check the wire between J8861 pin 2 and J8987 pin 6 for an open or short circuit, or a loose or damaged connector. **The wire is OK.**

Y **N**

Repair/reconnect as required.

Measure the voltage between J8987, pins 4 and 5 on the Finisher PWB. **The voltage is approximately +5VDC.**

Y **N**

Replace the Finisher PWB (PL 23.16).

Measure the voltage between J8987, pin 6 on the Finisher PWB and GND. Actuate the H-Transport Entrance Sensor. **The voltage changes.**

Y **N**

Replace the H-Transport Entrance Sensor (PL 23.4).

Replace the Finisher PWB (PL 23.16).

Power OFF. Open the H-Transport Top Cover. Cheat the H-Transport Interlock Sensor. Power ON. **The H-Transport Belt rotates.**

Y **N**

Check the wires between P/J8862 on the H-Transport Motor and J8987 on the Finisher PWB for an open or short circuit, or a loose or damaged connector. **The wires are OK.**

Y **N**

Repair/reconnect as required.

Measure the resistance of the H-Transport Motor between each pin P/J8862-1/2/5/6. **The resistance is approximately 20 Ohm.**

Y **N**

Replace the H-Transport Motor (PL 23.4).

Replace the Finisher PWB (PL 23.16). If the problem persists, replace the H-Transport Motor (PL 23.4).

Check the H-Transport Entrance Sensor and H-Transport Motor circuits for an intermittent condition. If the problem continues, replace the Finisher PWB (PL 23.16).

312-132 (LX) Finisher Entrance Sensor On Jam

BSD-ON:BSD 12.8 Office Finisher LX Transportation

After the Fuser Exit Sensor turned On, the Finisher Entrance Sensor did not turn On within the specified time.

Initial Actions

When this fault occurs frequently check the following:

- Verify that the finsher is properly docked
- Check the surface condition of the floor on which the machine is installed for uneveness
- Ensure that no large paper curls, or large wrinkles or puckers occur when media outside of specification is used
- That the paper path is free of pieces of paper or other debris
- If H-Transport Entrance Sensor failure occurs and whether the connector is misconnected or loosely connected
- Check the roll in the Transport Unit for nip failure wear or contamination
- Check that the H-Transport Cover is not deformed, damaged or has failed latches
- Check that the Punch Unit, or Punch Dummy Chute is not mis-installed, deformed or removed
- Verify that the Punch Pin of the Punch Unit is not mis-installed
- Check that the Transport Motor is installed correctly
- Check that the H-Transport Motor and it's driven parts operate normally

Procedure

Execute dC330 [012-100], Finisher Entrance Sensor. Actuate the Finisher Entrance Sensor (PL 23.14). **The display changes.**

Y N

Check the wire between J8868 pin 2 and P/J8988 pin 2 for an open or short circuit, or a loose or damaged connector. **The wire is OK.**

Y N

Repair/reconnect as required.

Measure the voltage between P/J8988, pins 3 and 1 on the Finisher PWB. **The voltage is approximately P/J8988 +5VDC.**

Y N

Replace the Finisher PWB (PL 23.16).

Measure the voltage between P/J8988, pin 2 on the Finisher PWB and GND. Actuate the Finisher Entrance Sensor. **The voltage changes.**

Y N

Replace the Finisher Entrance Sensor (PL 23.14).

Replace the Finisher PWB (PL 23.16).

Execute dC330 [012-038], Transport Motor. **The Transport Motor rotates.**

Y N

Check the wires between P/J8879 on the Transport Motor and P/J8983 on the Finisher PWB for an open or short circuit, or a loose or damaged connector. **The wires are OK.**

A

Y N

Repair/reconnect as required.

Measure the resistance of the Transport Motor between each pin P/J8879-1/2/5/6. **The resistance is approximately 20 Ohm.**

Y N

Replace the Transport Motor (PL 23.13).

Replace the Finisher PWB (PL 23.16). If the problem persists, replace the Transport Motor (PL 23.13).

Check the Entrance Roller, Paddle Shaft and Eject Belt for wear, damage or contamination (PL 23.13).

Check the Finisher Entrance Sensor and Transport Motor circuits for an intermittent condition. If the problem continues, replace the Finisher PWB (PL 23.16).

312-151 (LX) Compiler Exit Sensor Off Jam

BSD-ON:BSD 12.8 Office Finisher LX Transportation

After the Compiler Exit Sensor turned On, the Compiler Exit Sensor did not turn Off within the specified time.

Initial Actions

When this fault occurs frequently check the following:

- Ensure that no large paper curls, or large wrinkles or puckers occur when media outside of specification is used
- That the Compile Tray is free of pieces of paper or other debris
- If H-Transport Exit Sensor failure occurs as well and whether the connector is misconnected or loosely connected
- Check the Compile Exit Roll for nip failure, wear or contamination
- Ensure that no chute is deformed or missing
- Check the Compile Tray deformed or removed parts
- Check the Eject Roll for nip failure, wear or contamination
- Check that the H-Transport Motor and it's driven parts operate normally
- Check that the Eject Motor and it's driven parts operate normally

Procedure

Execute dC330 [012-150], Compiler Exit Sensor. Actuate the Compiler Exit Sensor (PL 23.14). **The display changes.**

Y N

Check the wire between J8869 pin 2 and P/J8988 pin 5 for an open or short circuit, or a loose or damaged connector. **The wire is OK.**

Y N

Repair/reconnect as required.

Measure the voltage between P/J8988, pins 6 and 4 on the Finisher PWB. **The voltage is approximately +5VDC.**

Y N

Replace the Finisher PWB (PL 23.16).

Measure the voltage between P/J8988, pin 5 on the Finisher PWB and GND. Actuate the Compiler Exit Sensor. **The voltage changes.**

Y N

Replace the Compiler Exit Sensor (PL 23.4).

Replace the Finisher PWB (PL 23.16).

Execute dC330 [012-038], Transport Motor. **The Transport Motor rotates.**

Y N

Check the wires between P/J8879 on the Transport Motor and P/J8983 on the Finisher PWB for an open or short circuit, or a loose or damaged connector. **The wires are OK.**

Y N

Repair/reconnect as required.

A B

Measure the resistance of the Transport Motor between each pin P/J8879-1/2/5/6. **The resistance is approximately 20 Ohm.**

Y N

Replace the Transport Motor (PL 23.13).

Replace the Finisher PWB (PL 23.16). If the problem persists, replace the Transport Motor (PL 23.13).

Check the Exit Roller, Paddle Shaft and Eject Belt for wear, damage or contamination (PL 23.13).

Check the Compiler Exit Sensor and Transport Motor circuits for an intermittent condition.

If the problem continues, replace the Finisher PWB (PL 23.16).

312-152 (LX) Compiler Exit Sensor On Jam

BSD-ON:BSD 12.8 Office Finisher LX Transportation

After the H-Transport Exit Sensor turned On, the Compiler Exit Sensor did not turn On within the specified time.

Initial Actions

When this fault occurs frequently check the following:

- Verify that the finsher is properly docked
- Check the surface condition of the floor on which the machine is installed for uneveness
- Ensure that no large paper curls, or large wrinkles or puckers occur when media outside of specification is used
- That the paper path is free of pieces of paper or other debris
- If H-Transport Exit Sensor failure occurs as well and whether the connector is misconnected or loosely connected
- Check the roll in the Transport Unit for nip failure wear or contamination
- Ensure that no chute is deformed or missing
- Check that the Punch Unit, or Punch Dummy Chute is not mis-installed, deformed or removed
- Verify that the Punch Pin of the Punch Unit is not mis-installed
- Check that the H-Transport Motor and it's driven parts operate normally

Initial Actions

- Ensure that Chute Assembly (PL 23.14 Item 16) is present and properly installed.
- Power OFF/ON

Procedure

Execute dC330 [012-150], Compiler Exit Sensor. Actuate the Compiler Exit Sensor (PL 23.14). **The display changes.**

Y N

Check the wire between J8869 pin 2 and P/J8988 pin 5 for an open or short circuit, or a loose or damaged connector. **The wire is OK.**

Y N

Repair/reconnect as required.

Measure the voltage between P/J8988, pins 6 and 4 on the Finisher PWB. **The voltage is approximately +5VDC.**

Y N

Replace the Finisher PWB (PL 23.16).

Measure the voltage between P/J8988, pin 5 on the Finisher PWB and GND. Actuate the Compiler Exit Sensor. **The voltage changes.**

Y N

Replace the Compiler Exit Sensor (PL 23.14).

Replace the Finisher PWB (PL 23.16).

A

Execute dC330 [012-038], Transport Motor. **The Transport Motor rotates.**

Y N

Check the wires between P/J8879 on the Transport Motor and P/J8983 on the Finisher PWB for an open or short circuit, or a loose or damaged connector. **The wires are OK.**

Y N

Repair/reconnect as required.

Measure the resistance of the Transport Motor between each pin P/J8879-1/2/5/6. **The resistance is approximately 20 Ohm.**

Y N

Replace the Transport Motor (PL 23.13).

Replace the Finisher PWB (PL 23.16). If the problem persists, replace the Transport Motor (PL 23.13).

Check the Exit Roller, Entrance Roller, Paddle Shaft and Eject Belt for wear, damage or contamination (PL 23.13).

Check the Compiler Exit Sensor and Transport Motor circuits for an intermittent condition.

If the problem continues, replace the Finisher PWB (PL 23.16).

312-161 (LX) Finisher Set Eject Jam

BSD-ON:BSD 12.11 Office Finisher LX Tamping and Offset (2 of 2)

BSD-ON:BSD 12.14 Office Finisher LX Eject Control (1 of 2)

After the Eject Motor turned On, the Compiler Tray No Paper Sensor did not turn Off within the specified time.

Initial Actions

When this fault occurs frequently check the following:

- Verify that the finsher is properly docked
- Check the surface condition of the floor on which the machine is installed for uneveness
- Ensure that no large paper curls, or large wrinkles or puckers occur when media outside of specification is used
- That the paper path is free of pieces of paper or other debris
- If H-Transport Exit Sensor failure occurs as well and whether the connector is misconnected or loosely connected
- Check the roll in the Transport Unit for nip failure wear or contamination
- Ensure that no chute is deformed or missing
- Check that the Punch Unit, or Punch Dummy Chute is not mis-installed, deformed or removed
- Verify that the Punch Pin of the Punch Unit is not mis-installed
- Check that the H-Transport Motor and it's driven parts operate normally

Procedure

Enter dC330 [012-151], Compiler Tray No Paper Sensor. Select **Start**. Actuate the Compiler Tray No Paper Sensor. **The display changes.**

Y N

Check the wire between J8880 pin 2 and J8984 pin 2 on the Finisher PWB for an open or short circuit, or a loose or damaged connector. **The wire is OK.**

Y N

Repair/reconnect as required.

Measure the voltage between J8984 pins 3 and 1 on the Finisher PWB. **The voltage is approximately +5VDC.**

Y N

Replace the Finisher PWB (PL 23.16).

Measure the voltage between J8984 pin 2 on the Finisher PWB and GND (**BSD 12.11 Office Finisher LX Tamping and Offset (2 of 2)** Actuate the Compiler Tray No Paper Sensor. **The voltage changes.**

Y N

Replace the Compiler Tray No Paper Sensor (PL 23.12).

Replace the Finisher PWB (PL 23.16).

Alternately execute dC330 [012-054 Eject Motor FORWARD LO] and dC330 [012-055 Eject Motor FORWARD HI]. **The Eject Motor starts up.**

Y N

Check the wires between P/J8878 on the Eject Motor and P/J8983 on the Finisher PWB (**BSD 12.14 Office Finisher LX Eject Control (1 of 2)**) for an open or short circuit, or a loose or damaged connector. **The wires are OK.**

Y N

Repair/reconnect as required.

Measure the resistance of the Eject Motor between each point of P/J8878-1/3/4/6. **The resistance is approximately 20 Ohm.**

Y N

Replace the Eject Motor (PL 23.11).

Replace the Eject Motor (PL 23.11). If the problem persists, replace the Finisher PWB (PL 23.16).

Check the Exit Roller, Entrance Roller, Paddle Shaft and Eject Belt for wear, damage or contamination (PL 23.13).

Check the Compiler Tray No Paper Sensor and Eject Motor circuits for an intermittent condition.

If the problem continues, replace the Finisher PWB (PL 23.16).

312-210 (LX) NVM Access Fault

BSD-ON:BSD 12.1 Office Finisher LX Communication (IOT-Finisher)

When error occurs, NVM cannot be normally accessed.

Initial Actions

Procedure

Check the following:

- Switch off the power and switch on the power.
- Initialize NVM using dC301
- Reload or upgrade Controller firmware using GP 9.
- Check the wiring between the Finisher PWB and the MCU PWB using (BSD 12.1 Office Finisher LX Communication (IOT-Finisher))
- Replace the Finisher PWB (PL 23.16)
- Replace the MCU PWB (PL 18.1)

312-211 (LX) Stacker Tray Fault

BSD-ON:BSD 12.16 Office Finisher LX Stacker Tray Control

Stack Height Sensor 1 is not ON within the specified time after stacker tray starts elevating.While Stacker Tray is elevating or lowering, the state of the Encoder Sensor does not change within the specified time.

Initial Actions

- Check for obstructions under the tray.
- Check the operation of the Stacker Height Sensor 1 actuator.
- Check the tray raise/lower mechanism for damage or contamination.
- Drive Motor failure/rotation failure
- Drive Gear wear/rotation failure/damage
- Loose Belt tension or belt disengaged

Procedure

Execute dC330 [012-264], Stacker Height Sensor 1. Actuate the Stacker Height Sensor 1. **The display changes.**

Y N

Check the wire between J8873 pin 2 and P/J8988 pin 17 for an open or short circuit, or a loose or damaged connector. **The wire is OK.**

Y N

Repair/reconnect as required.

Measure the voltage between P/J8988, pins 16 and 18 on the Finisher PWB. **The voltage is approximately +5VDC.**

Y N

Replace the Finisher PWB (PL 23.16).

Measure the voltage between P/J8988, pin 17 on the Finisher PWB and GND. Actuate the Stacker Height Sensor 1. **The voltage changes.**

Y N

Replace the Stacker Height Sensor 1 (PL 23.11).

Replace the Finisher PWB (PL 23.16).

Execute dC330 [012-263], Stacker Encoder Sensor. Manually rotate the Encoder (PL 23.7) to block and unblock the sensor. **The display changes.**

Y N

Check the wire between J8875 pin 2 and P/J8988 pin 23 for an open or short circuit, or a loose or damaged connector. **The wire is OK.**

Y N

Repair/reconnect as required.

Measure the voltage between P/J8988, pins 22 and 24 on the Finisher PWB. **The voltage is approximately +5VDC.**

Y N

Replace the Finisher PWB (PL 23.16).

A B

A B

Measure the voltage between P/J8988, pin 23 on the Finisher PWB and GND. Manually rotate the Encoder (PL 23.7) to block and unblock the Stacker Encoder Sensor. **The voltage changes.**

Y N

Replace the Stacker Encoder Sensor (PL 23.7).

Replace the Finisher PWB (PL 23.16).

Alternately execute dC330 [012-060], Stacker Motor Up, and [012-061], Stacker Motor Down. **The Stacker Motor (PL 23.7) Moves.**

Y N

There is +24 VDC from P/J8986 pin 12 to GND (BSD 12.16 Office Finisher LX Stacker Tray Control)

Y N

Go to **BSD 12.16 Office Finisher LX Stacker Tray Control** and check the circuit of the Option Switch (PL 23.9). Repair/reconnect as required.

Check the wires between P/J8986 pins 11 and 12, and the Stacker Motor for an open or short circuit, or a loose or damaged connector. **The wires are OK.**

Y N

Repair/reconnect as required.

Replace the Stacker Elevator Motor (PL 23.7). If the problem persists, replace the Finisher PWB (PL 23.16).

Replace the Finisher PWB (PL 23.16).

312-212 (LX) Stacker Tray Upper Limit Fault

BSD-ON:BSD 12.16 Office Finisher LX Stacker Tray Control

The stacker has continued to elevate after the defined period of time has passed since Stacker No Paper Sensor is ON during stacker elevation.

Initial Actions

- Check for obstructions under the tray.
- Check the operation of the Stacker Height Sensor actuators.
- Check the tray raise/lower mechanism for damage or contamination.

Procedure

Execute dC330 [012-264], Stacker Height Sensor 1. Actuate the Stacker Height Sensor 1. **The display changes.**

Y N

Check the wire between J8873 pin 2 and P/J8988 pin 17 for an open or short circuit, or a loose or damaged connector. **The wire is OK.**

Y N

Repair/reconnect as required.

Measure the voltage between P/J8988, pins 16 and 18 on the Finisher PWB (**BSD 12.16 Office Finisher LX Stacker Tray Control**). **The voltage is approximately +5VDC.**

Y N

Replace the Finisher PWB (PL 23.16).

Measure the voltage between P/J8988, pin 17 on the Finisher PWB and GND **BSD 12.16 Office Finisher LX Stacker Tray Control**. Actuate the Stacker Height Sensor 1. **The voltage changes.**

Y N

Replace the Stacker Height Sensor 1 (PL 23.11).

Replace the Finisher PWB (PL 23.16).

Execute dC330 [012-265], Stacker Height Sensor 2. Block and unblock the Stacker Height Sensor 2. **The display changes.**

Y N

Check the wire between J8874 pin 2 and P/J8988 pin 20 for an open or short circuit, or a loose or damaged connector. **The wire is OK.**

Y N

Repair/reconnect as required.

Measure the voltage between P/J8988, pins 19 and 21 on the Finisher PWB (**BSD 12.16 Office Finisher LX Stacker Tray Control**). **The voltage is approximately +5VDC.**

Y N

Replace the Finisher PWB (PL 23.16).

Measure the voltage between P/J8988, pin 20 on the Finisher PWB and GND (**BSD 12.16 Office Finisher LX Stacker Tray Control**). Actuate the Stacker Height Sensor 1. **The voltage changes.**

A

A

Y N

Replace the Stacker Height Sensor 2 (PL 23.11).

Replace the Finisher PWB (PL 23.16).

Execute dC330 [012-263], Stacker Encoder Sensor. Manually rotate the Encoder (PL 23.7) to block and unblock the sensor. **The display changes.**

Y N

Check the wire between J8875 pin 2 and P/J8988 pin 23 for an open or short circuit, or a loose or damaged connector. **The wire is OK.**

Y N

Repair/reconnect as required.

Measure the voltage between P/J8988, pins 22 and 24 on the Finisher PWB (**BSD 12.16 Office Finisher LX Stacker Tray Control**). **The voltage is approximately +5VDC.**

Y N

Replace the Finisher PWB (PL 23.16).

Measure the voltage between P/J8988, pin 23 on the Finisher PWB and GND **BSD 12.16 Office Finisher LX Stacker Tray Control**. Manually rotate the Encoder (PL 23.7) to block and unblock the Stacker Encoder Sensor. **The voltage changes.**

Y N

Replace the Stacker Encoder Sensor (PL 23.7).

Replace the Finisher PWB (PL 23.16).

Execute dC330 [012-262], Stacker No Paper Sensor. Block and unblock the Sensor (PL 23.7). **The display changes.**

Y N

Check the wire between J8872 pin 2 and P/J8988 pin 14 for an open or short circuit, or a loose or damaged connector. **The wire is OK.**

Y N

Repair/reconnect as required.

Measure the voltage between P/J8988, pins 13 and 15 on the Finisher PWB **BSD 12.16 Office Finisher LX Stacker Tray Control**. **The voltage is approximately +5VDC.**

Y N

Replace the Finisher PWB (PL 23.16).

Measure the voltage between P/J8988, pin 14 on the Finisher PWB and GND **BSD 12.16 Office Finisher LX Stacker Tray Control**. Actuate the Stacker No Paper Sensor. **The voltage changes.**

Y N

Replace the Stacker No Paper Sensor (PL 23.7).

Replace the Finisher PWB (PL 23.16).

Replace the Finisher PWB (PL 23.16).

312-213 (LX) Stacker Tray Lower Limit Fault

BSD-ON:BSD 12.16 Office Finisher LX Stacker Tray Control

Stacker descended lower than normal levels, below low limit height.

Initial Actions

- Check for obstructions under the tray.
- Check the operation of the Stacker Height Sensor actuators.
- Check the tray raise/lower mechanism for damage or contamination.

Procedure

Execute dC330 [012-264], Stacker Height Sensor 1. Actuate the Stacker Height Sensor 1. **The display changes.**

Y N

Check the wire between J8873 pin 2 and P/J8988 pin 17 for an open or short circuit, or a loose or damaged connector. **The wire is OK.**

Y N

Repair/reconnect as required.

Measure the voltage between P/J8988, pins 16 and 18 on the Finisher PWB (**BSD 12.16 Office Finisher LX Stacker Tray Control**). **The voltage is approximately +5VDC.**

Y N

Replace the Finisher PWB (PL 23.16).

Measure the voltage between P/J8988, pin 17 on the Finisher PWB and GND (**BSD 12.16 Office Finisher LX Stacker Tray Control**).Actuate the Stacker Height Sensor 1. **The voltage changes.**

Y N

Replace the Stacker Height Sensor 1 (PL 23.11).

Replace the Finisher PWB (PL 23.16).

Execute dC330 [012-265], Stacker Height Sensor 2. Block and unblock the Stacker Height Sensor 2. **The display changes.**

Y N

Check the wire between J8874 pin 2 and P/J8988 pin 20 for an open or short circuit, or a loose or damaged connector. **The wire is OK.**

Y N

Repair/reconnect as required.

Measure the voltage between P/J8988, pins 19 and 21 on the Finisher **BSD 12.16 Office Finisher LX Stacker Tray Control** **The voltage is approximately +5VDC.**

Y N

Replace the Finisher PWB (PL 23.16).

Measure the voltage between P/J8988, pin 20 on the Finisher PWB and GND **BSD 12.16 Office Finisher LX Stacker Tray Control** .Actuate the Stacker Height Sensor 1. **The voltage changes.**

Y N

Replace the Stacker Height Sensor 2 (PL 23.11).

A B

A B

Replace the Finisher PWB (PL 23.16).

Execute dC330 [012-263], Stacker Encoder Sensor. Manually rotate the Encoder (PL 23.7) to block and unblock the sensor. **The display changes.**

Y N

Check the wire between J8875 pin 2 and P/J8988 pin 23 for an open or short circuit, or a loose or damaged connector. **The wire is OK.**

Y N

Repair/reconnect as required.

Measure the voltage between P/J8988, pins 22 and 24 on the Finisher PWB (**BSD 12.16 Office Finisher LX Stacker Tray Control**). **The voltage is approximately +5VDC.**

Y N

Replace the Finisher PWB (PL 23.16).

Measure the voltage between P/J8988, pin 23 on the Finisher PWB and GND (**BSD 12.16 Office Finisher LX Stacker Tray Control**). Manually rotate the Encoder (PL 23.7) to block and unblock the Stacker Encoder Sensor. **The voltage changes.**

Y N

Replace the Stacker Encoder Sensor (PL 23.7).

Replace the Finisher PWB (PL 23.16).

Execute dC330 [012-262], Stacker No Paper Sensor. Block and unblock the Sensor (PL 23.7). **The display changes.**

Y N

Check the wire between J8872 pin 2 and P/J8988 pin 14 for an open or short circuit, or a loose or damaged connector. **The wire is OK.**

Y N

Repair/reconnect as required.

Measure the voltage between P/J8988, pins 13 and 15 on the Finisher PWB (**BSD 12.16 Office Finisher LX Stacker Tray Control**). **The voltage is approximately +5VDC.**

Y N

Replace the Finisher PWB (PL 23.16).

Measure the voltage between P/J8988, pin 14 on the Finisher PWB and GND (**BSD 12.16 Office Finisher LX Stacker Tray Control**). Actuate the Stacker No Paper Sensor. **The voltage changes.**

Y N

Replace the Stacker No Paper Sensor (PL 23.7).

Replace the Finisher PWB (PL 23.16).

Replace the Finisher PWB (PL 23.16).

312-221 (LX) Front Tamper Home Sensor On Failure

BSD-ON:BSD 12.4 Office Finisher LX Interlock Switching

BSD-ON:BSD 12.10 Office Finisher LX Tamping and offset (1 of 2)

BSD-ON:BSD 12.11 Office Finisher LX Tamping and Offset (2 of 2)

After the Front Tamper started moving to the home position, the Front Tamper Home Sensor did not turn On within 800ms.

Procedure

Manually operate the Tamper mechanism. **The Tamper mechanism moves smoothly.**

Y N

Replace the parts that are interfering with operation.

Execute dC330 [012-220], Front Tamper Home Sensor. Manually operate the Tamper mechanism to block and unblock the sensor. **The display changes.**

Y N

Check the wire between J8881 pin 2 and J8984 pin 5 for an open or short circuit, or a loose or damaged connector. **The wire is OK.**

Y N

Repair/reconnect as required.

Measure the voltage between J8984, pins 6 and 4 on the Finisher PWB. **The voltage is approximately +5VDC.**

Y N

Replace the Finisher PWB (PL 23.16).

Measure the voltage between J8984, pin 5 on the Finisher PWB and GND. Manually operate the Tamper mechanism to block and unblock the Front Tamper Home Sensor. **The voltage changes.**

Y N

Replace the Front Tamper Home Sensor (PL 23.12).

Replace the Finisher PWB (PL 23.16).

Alternately execute dC330 [012-020], Front Tamper Motor Front and [012-023], Front Tamper Motor Rear. **The Front Tamper Motor moves.**

Y N

There is +24 VDC from J8984 pin 19 on the Finisher PWB to GND

Y N

There is +24 VDC from J8982 pin 4 on the Finisher PWB to GND .

Y N

Go to **BSD 12.4 Office Finisher LX Interlock Switching** and check the +24V circuit feeding pin 4. Repair/reconnect as required.

Replace the Finisher PWB (PL 23.16).

Check the wires between J8984, pins 18 ~ 22 on the Finisher PWB, and the Front Tamper Motor P/J8884 for an open or short circuit, or a loose or damaged connector. **The wires are OK.**

A

A

Y N

Repair/reconnect as required.

Replace the front Tamper Motor (PL 23.12). If the problem persists, replace the Finisher PWB (PL 23.16).

Replace the Finisher PWB (PL 23.16).

312-223 (LX) Front Tamper Home Sensor Off Failure

BSD-ON:BSD 12.4 Office Finisher LX Interlock Switching

BSD-ON:BSD 12.10 Office Finisher LX Tamping and offset (1 of 2)

BSD-ON:BSD 12.11 Office Finisher LX Tamping and Offset (2 of 2)

After the Front Tamper started moving away from the home position, the Front Tamper Home Sensor did not turn Off within the specified time.

Procedure

Manually operate the Tamper mechanism. **The Tamper mechanism moves smoothly.**

Y N

Replace the parts that are interfering with operation.

Execute dC330 [012-220], Front Tamper Home Sensor. Manually operate the Tamper mechanism to block and unblock the sensor. **The display changes.**

Y N

Check the wire between J8881 pin 2 and J8984 pin 5 for an open or short circuit, or a loose or damaged connector. **The wire is OK.**

Y N

Repair/reconnect as required.

Measure the voltage between J8984, pins 6 and 4 on the Finisher PWB **BSD 12.10 Office Finisher LX Tamping and offset (1 of 2)**. **The voltage is approximately +5VDC.**

Y N

Replace the Finisher PWB (PL 23.16).

Measure the voltage between J8984, pin 5 on the Finisher PWB and GND (**BSD 12.10 Office Finisher LX Tamping and offset (1 of 2)**. Manually operate the Tamper mechanism to block and unblock the Front Tamper Home Sensor. **The voltage changes.**

Y N

Replace the Front Tamper Home Sensor (PL 23.12).

Replace the Finisher PWB (PL 23.16).

Alternately execute dC330 [012-020], Front Tamper Motor Front and [012-023], Front Tamper Motor Rear. **The Front Tamper Motor moves.**

Y N

There is +24 VDC from J8984 pin 19 on the Finisher PWB to GND

Y N

There is +24 VDC from J8982 pin 4 on the Finisher PWB to GND

Y N

Go to **BSD 12.4 Office Finisher LX Interlock Switching**: J8982 and check the +24V circuit feeding pin 4. Repair/reconnect as required.

Replace the Finisher PWB (PL 23.16).

A B

A B

Check the wires between J8984, pins 18 ~ 22 on the Finisher PWB, and the Front Tamper Motor P/J8884 for an open or short circuit, or a loose or damaged connector.
The wires are OK.

Y N

Repair/reconnect as required.

Replace the Front Tamper Motor (PL 23.12). If the problem persists, replace the Finisher PWB (PL 23.16).

Replace the Finisher PWB (PL 23.16).

312-224 (LX) Rear Tamper Home Sensor Off Failure

BSD-ON:BSD 12.4 Office Finisher LX Interlock Switching

BSD-ON:BSD 12.10 Office Finisher LX Tamping and offset (1 of 2)

BSD-ON:BSD 12.11 Office Finisher LX Tamping and Offset (2 of 2)

After the Rear Tamper started moving away from the home position, the Rear Tamper Home Sensor did not turn Off within the specified time.

Procedure

Manually operate the Tamper mechanism. **The Tamper mechanism moves smoothly.**

Y N

Replace the parts that are interfering with operation.

Execute dC330 [012-221], Rear Tamper Home Sensor. Manually operate the Tamper mechanism to block and unblock the sensor. **The display changes.**

Y N

Check the wire between J8882 pin 2 and J8984 pin 8 for an open or short circuit, or a loose or damaged connector. **The wire is OK.**

Y N

Repair/reconnect as required.

Measure the voltage between J8984, pins 9 and 7 on the Finisher PWB. **The voltage is approximately +5VDC.**

Y N

Replace the Finisher PWB (PL 23.16).

Measure the voltage between J8984, pin 8 on the Finisher PWB and GND. Manually operate the Tamper mechanism to block and unblock the Rear Tamper Home Sensor. **The voltage changes.**

Y N

Replace the Rear Tamper Home Sensor (PL 23.12).

Replace the Finisher PWB (PL 23.16).

Alternately execute dC330 [012-026], Rear Tamper Motor Front and [012-029], Rear Tamper Motor Rear. **The Rear Tamper Motor moves.**

Y N

There is +24 VDC from J8984 pin 19 on the Finisher PWB to GND

Y N

There is +24 VDC from J8982 pin 4 on the Finisher PWB to GND

Y N

Go to **BSD 12.4 Office Finisher LX Interlock Switching** and check the +24V circuit feeding pin 4. Repair/reconnect as required.

Replace the Finisher PWB (PL 23.16).

Check the wires between J8984, pins 13 ~ 17 on the Finisher PWB, and the Rear Tamper Motor P/J8883 for an open or short circuit, or a loose or damaged connector.
The wires are OK.

A

A

Y **N**

Repair/reconnect as required.

Replace the Rear Tamper Motor (PL 23.12). If the problem persists, replace the Finisher PWB (PL 23.16).

Replace the Finisher PWB (PL 23.16).

312-231 (LX) Punch Home Sensor On Fail

BSD-ON:BSD 12.7 Office Finisher LX Punch

The Punch Home Sensor did not turn ON within the specified time after the Punch Motor started running.

Initial Actions

Check the following:

- Punch Home Actuator for deformation
- Punch Home Sensor for proper installation
- Punch Home Sensor connectors
- Punch Motor for proper operation
- Punch Motor connectors

Procedure

Enter dC330 [12-074] and [12-078], Punch Motor (PL 23.5), alternately. **Select Start. The Punch Motor runs.**

Y **N**

Select **Stop**. Check circuit of the Punch Motor. Refer to **BSD 12.7 Office Finisher LX Punch** to troubleshoot the Circuit.

Select **Stop**. Select [12-271], Punch Home Sensor (PL 23.5). Select **Start**. Actuate the sensor with a piece of paper. **The display changes.**

Y **N**

Go to **BSD 12.7 Office Finisher LX Punch** . Check circuit of the Punch Home Sensor.

Select **Stop**. If the problem continues, replace the Finisher PWB (PL 23.16).

312-243 (LX) Booklet Folder Home Sensor On Fail

BSD-ON:BSD 12.9 Office Finisher LX Folding

Folder Home Sensor is not turned on after the lapse of 500ms from Motor ON while Folder Knife is returning to Home.

Initial Actions

- The Folder Home Sensor for improper installation
- The Folder Home Sensor connectors for connection failure
- The Folder Knife Motor connectors for connection failure
- The Knife drive mechanism for a foreign substance

Procedure

Enter dC330 [013-022], Folder Knife Motor FWD and [013-023], Folder Knife Motor REV alternately. Select **Start**. **The Fold Knife Motor energizes.**

Y N

Select **Stop**. Refer to (**BSD 12.9 Office Finisher LX Folding** . Check continuity between the Booklet Folder Knife Motor (P/J8905) and the Finisher PWB (P8985), and between the Booklet PWB (P/J8994) and the Finisher PWB (P8985). **The continuity check is OK.**

Y N

Repair the open circuit or short circuit.

Replace the Booklet Folder Knife Motor (PL 23.15). If the problem continues, replace the Booklet PWB (PL 23.21).

Select **Stop**. Enter [13-101], Folder Home Sensor. Select **Start**. Block/unblock the Folder Home Sensor. **The display changed.**

Y N

Check the wire between J8904 pin 2 and P/J8990 pin 2 on the FInisher PWB for an open or short circuit, or a loose or damaged connector. **The wire is OK.**

Y N

Repair/reconnect as required.

Measure the voltage between P/J8990, pins 3 and 1 on the Finisher PWB (**BSD 12.9 Office Finisher LX Folding** **The voltage is approximately +5VDC.**

Y N

Replace the Finisher PWB (PL 23.16).

Measure the voltage between P/J8990, pin 2 on the Finisher PWB and GND **BSD 12.9 Office Finisher LX Folding** Block/unblock the Folder Home Sensor. **The voltage changes.**

Y N

Replace the Folder Home Sensor (PL 23.15).

Replace the Finisher PWB (PL 23.16).

If the problem continues, replace the Finisher PWB (PL 23.16).

312-249 (LX) Booklet Front Stapler Fail

BSD-ON:BSD 12.5 Office Finisher LX Booklet Interlock Switching

BSD-ON:BSD 12.18 Office Finisher LX Booklet Staple Control (1 of 2 - Front)

The Booklet Front Staple Home Switch is not ON (does not return to home position) within the specified time after the Booklet Front Staple Motor starts to reverse.

Initial Actions

Check the Booklet Front Stapler for jammed staples or an incorrectly installed staple cartridge.

Procedure

Enter dC330 [12-024], Staple Motor FWD. and then [12-025], Staple Motor REV. **The Front Booklet Stapler cycles normally.**

Y N

There is +24 VDC from P/J8993 pin 5 on the Booklet PWB to GND.

Y N

Check the circuit from the Booklet PWB to the Booklet Stapler Cover Switch (**BSD 12.5 Office Finisher LX Booklet Interlock Switching**. Repair/replace as required (PL 23.21).

Switch off the power. Check the wires between P/J8994 on the Booklet PWB and J8894 on the Front Booklet Stapler for a loose or damaged connector, or an open or short circuit. If the wires are OK, replace the Front Booklet Stapler Assembly (PL 23.19). If the problem remains, replace the Booklet PWB (PL 23.21).

Switch off the power. Check the wire between P/J8995, pin 5 on the Booklet PWB and J8894 pin 3 on the Front Booklet Stapler for a loose or damaged connector, or an open or short circuit. If the wires are OK, replace the Front Booklet Stapler Assembly (PL 23.19). If the problem remains, replace the Booklet PWB (PL 23.21).

312-260 (LX) Eject Clamp Home Sensor On Failure

BSD-ON:BSD 12.14 Office Finisher LX Eject Control (1 of 2)

After the Eject Clamp started ascending, the Eject Clamp Home Sensor did not turn On within 500ms.

Initial Actions

- Manually operate the Eject mechanism. Check for binding, a dirty sensor, or damage.
- Check the actuator for the Eject Clamp Home Sensor b for damage

Procedure

Execute dC330 [012-250], Eject Clamp Home Sensor. Block and unblock the Eject Clamp Home Sensor **The display changes.**

Y N

Check the wire between J8870 pin 2 on the Eject Clamp Home Sensor and P/J8988 pin 8 on the Finisher PWB for an open or short circuit, or loose or damaged connectors. **The wire is OK.**

Y N

Repair/replace as required.

Measure the voltage between P/J8988, pins 9 and 7 on the Finisher PWB. **The voltage is approximately +5VDC.**

Y N

Replace the Finisher PWB (PL 23.16).

Measure the voltage between P/J8988 pin 8 on the Finisher PWB and GNDActuate the Eject Clamp Home Sensor. **The voltage changes.**

Y N

Replace the Eject Clamp Home Sensor (PL 23.11).

Replace the Finisher PWB (PL 23.16).

Alternately execute dC330 [012-052], Eject Clamp Up and [012-053], Eject Clamp Down. **The Eject Motor (PL 22.9) starts up.**

Y N

Check the wires between P/J8878 pins 1~6 on the Eject Motor and P/J8983 pins 5~8 on the Finisher PWB for an open or short circuit, or loose or damaged connectors **BSD 12.14 Office Finisher LX Eject Control (1 of 2)**. **The wires are OK.**

Y N

Repair/replace as required.

Measure the resistance of the Eject Motor between each pin of P/J8878-1/3/4/6. **The resistance is approximately 2Ohm.**

Y N

Replace the Eject Motor (PL 23.11).

Replace the Finisher PWB (PL 23.16). If the problem remains, replace the Eject Motor (PL 23.11)

A

Go to **BSD 12.14 Office Finisher LX Eject Control (1 of 2)**. Check for an intermittent circuit or intermittent mechanical problem. If the check is OK, replace the Finisher PWB (PL 23.16).

312-263 (LX) Rear Tamper Failure

BSD-ON:BSD 12.4 Office Finisher LX Interlock Switching

BSD-ON:BSD 12.10 Office Finisher LX Tamping and offset (1 of 2)

BSD-ON:BSD 12.11 Office Finisher LX Tamping and Offset (2 of 2)

After the Rear Tamper started moving to the home position, the Rear Tamper Home Sensor did not turn On within 800ms.

Procedure

Manually operate the Tamper mechanism. **The Tamper mechanism moves smoothly.**

Y N

Replace the parts that are interfering with operation.

Execute dC330 [012-221], Rear Tamper Home Sensor. Manually operate the Tamper mechanism to block and unblock the sensor. **The display changes.**

Y N

Check the wire between J8882 pin 2 and J8984 pin 8 for an open or short circuit, or a loose or damaged connector. **The wire is OK.**

Y N

Repair/reconnect as required.

Measure the voltage between J8984, pins 9 and 7 on the Finisher PWB. **The voltage is approximately +5VDC.**

Y N

Replace the Finisher PWB (PL 23.16).

Measure the voltage between J8984, pin 8 on the Finisher PWB and GND **BSD 12.11 Office Finisher LX Tamping and Offset (2 of 2)**. Manually operate the Tamper mechanism to block and unblock the Rear Tamper Home Sensor. **The voltage changes.**

Y N

Replace the Rear Tamper Home Sensor (PL 23.12).

Replace the Finisher PWB (PL 23.16).

Alternately execute dC330 [012-026], Rear Tamper Motor Front and [012-029], Rear Tamper Motor Rear. **The Rear Tamper Motor moves.**

Y N

There is +24 VDC from J8984 pin 14 on the Finisher PWB to GND

Y N

There is +24 VDC from J8982 pin 4 on the Finisher PWB to GND

Y N

Go to **BSD 12.4 Office Finisher LX Interlock Switching** and check the +24V circuit feeding pin 4. Repair/reconnect as required.

Replace the Finisher PWB (PL 23.16).

Check the wires between J8984, pins 13 ~ 17 on the Finisher PWB, and the Rear Tamper Motor P/J8883 for an open or short circuit, or a loose or damaged connector. **The wires are OK.**

A

Y N

Repair/reconnect as required.

Replace the Rear Tamper Motor (PL 23.12). If the problem persists, replace the Finisher PWB (PL 23.16).

Replace the Finisher PWB (PL 23.16).

312-265 (LX) Booklet Folder Home Sensor OFF Fail

BSD-ON:BSD 12.9 Office Finisher LX Folding

When the Booklet Home moves from Home position, the Folder Home Sensor did not turn OFF within the specified time.

Initial Actions

- The Folder Home Sensor for improper installation
- The Folder Home Sensor connectors for connection failure
- The Booklet Fold Knife Motor connectors for connection failure
- The Knife drive mechanism for a foreign substance

Procedure

Enter dC330 [013-022], Folder Knife Motor FWD and [013-023], Folder Knife Motor REV alternately. Select **Start**. **The Fold Knife Motor energizes.**

Y N

Select **Stop**. Refer to **BSD 12.9 Office Finisher LX Folding** Check continuity between the Folder Knife Motor (P/J8905) and the Finisher PWB (P8985), and between the Booklet PWB (P/J8994) and the Finisher PWB (P8985). **The continuity check is OK.**

Y N

Repair the open circuit or short circuit.

Replace the Folder Knife Motor (PL 23.15). If the problem continues, replace the Booklet PWB (PL 23.21).

Select **Stop**. Enter [13-101], Folder Home Sensor. Select **Start**. Block/unblock the Folder Home Sensor. **The display changed.**

Y N

Check the wire between J8904 pin 2 and P/J8990 pin 2 on the FInisher PWB for an open or short circuit, or a loose or damaged connector. **The wire is OK.**

Y N

Repair/reconnect as required.

Measure the voltage between P/J8990, pins 3 and 1 on the Finisher PWB **BSD 12.9 Office Finisher LX Folding** **The voltage is approximately +5VDC.**

Y N

Replace the Finisher PWB (PL 23.16).

Measure the voltage between P/J8990, pin 2 on the Finisher PWB and GND (**BSD 12.9 Office Finisher LX Folding**.Block/unblock the Folder Home Sensor. **The voltage changes.**

Y N

Replace the Folder Home Sensor (PL 23.15).

Replace the Finisher PWB (PL 23.16).

If the problem continues, replace the Finisher PWB (PL 23.16).

312-268 (LX) Booklet Rear Stapler Fail

BSD-ON:BSD 12.5 Office Finisher LX Booklet Interlock Switching

BSD-ON:BSD 12.19 Office Finisher LX Booklet Staple Control (2 of 2 -Rear)

The Booklet Rear Staple Home Switch is not ON (does not return to home position) within the specified time after the Booklet Rear Staple Motor starts to reverse.

Initial Actions

Check the Booklet Rear Stapler for jammed staples or an incorrectly installed staple cartridge.

Procedure

Enter dC330 [12-026], Staple Motor FWD. and then [12-027], Staple Motor REV. **The Front Booklet Stapler cycles normally.**

Y N

There is +24 VDC from P/J8993 pin 5 on the Booklet PWB to GND.

Y N

Check the circuit from the Booklet PWB to the Booklet Stapler Cover Switch (**BSD 12.5 Office Finisher LX Booklet Interlock Switching**. Repair/replace as required (PL 23.21).

Switch off the power. Check the wires between P/J8995 on the Booklet PWB and J8895 on the Rear Booklet Stapler **BSD 12.19 Office Finisher LX Booklet Staple Control (2 of 2 -Rear)** for a loose or damaged connector, or an open or short circuit. If the wires are OK, replace the Rear Booklet Stapler Assembly (PL 23.20). If the problem remains, replace the Booklet PWB (PL 23.21).

Switch off the power. Check the wire between P/J8995, pin 12 on the Booklet PWB and J8895 pin 3 on the Rear Booklet Stapler **BSD 12.19 Office Finisher LX Booklet Staple Control (2 of 2 -Rear)** for a loose or damaged connector, or an open or short circuit. If the wires are OK, replace the Rear Booklet Stapler Assembly (PL 23.20). If the problem remains, replace the Booklet PWB (PL 23.21).

312-269 (LX) Booklet Sub-CPU Communications Fail

BSD-ON:BSD 12.1 Office Finisher LX Communication (IOT-Finisher)

Communications between the Finisher PWB and the Booklet PWB Failed

Initial Actions

- Check the connectors at the Finisher PWB and the Booklet PWB are connected or seated properly
- Check the wiring between the Finisher PWB and the Booklet PWB for damage

Procedure

Power off and power on the printer. Execute dC330 [013-161], Booklet Maker Detected. **The problem is resolved.**

Y N

Reload the software using GP 9. **The problem is resolved.**

Y N

Replace the Finisher PWB (PL 23.16). If the problem continues, replace the Booklet PWB (PL 23.21).

Rerun the job.

Rerun the job.

312-282 (LX) Eject Clamp Home Sensor Off Failure

BSD-ON:BSD 12.14 Office Finisher LX Eject Control (1 of 2)

After the Eject Clamp started descending, the Eject Clamp Home Sensor did not turn Off within 200ms.

Initial Actions

- Manually operate the Eject mechanism. Check for binding, a dirty sensor, or damage.
- Check the actuator for the Eject Clamp Home Sensor for damage

Procedure

Execute dC330 [012-250], Eject Clamp Home Sensor. Block and unblock the Eject Clamp Home Sensor **The display changes.**

Y N

Check the wire between J8870 pin 2 on the Eject Clamp Home Sensor and P/J8988 pin 8 on the Finisher PWB for an open or short circuit, or loose or damaged connectors. **The wire is OK.**

Y N

Repair/replace as required.

Measure the voltage between P/J8988, pins 9 and 7 on the Finisher PWB. **The voltage is approximately +5VDC.**

Y N

Replace the Finisher PWB (PL 23.16).

Measure the voltage between P/J8988 pin 8 on the Finisher PWB and GND. Actuate the Eject Clamp Home Sensor. **The voltage changes.**

Y N

Replace the Eject Clamp Home Sensor (PL 23.11).

Replace the Finisher PWB (PL 23.16).

Alternately execute dC330 [012-052], Eject Clamp Up and [012-053], Eject Clamp Down. **The Eject Motor starts.**

Y N

Check the wires between P/J8878 pins 1~6 on the Eject Motor and P/J8983 pins 5~8 on the Finisher PWB for an open or short circuit, or loose or damaged connectors **BSD 12.14 Office Finisher LX Eject Control (1 of 2)**. **The wires are OK.**

Y N

Repair/replace as required.

Measure the resistance of the Eject Motor between each pin of P/J8878-1/3/4/6. **The resistance is approximately 2Ohm.**

Y N

Replace the Eject Motor (PL 23.11).

Replace the Finisher PWB (PL 23.16). If the problem remains, replace the Eject Motor (PL 23.11)

A

A

Go to **BSD 12.14 Office Finisher LX Eject Control (1 of 2)**. Check for an intermittent circuit or intermittent mechanical problem. If the check is OK, replace the Finisher PWB (PL 23.16).

312-283 (LX) Set Clamp Home Sensor On Failure

BSD-ON:BSD 12.14 Office Finisher LX Eject Control (1 of 2)

BSD-ON:BSD 12.15 Office Finisher LX Eject Control (2 of 2)

After the Set Clamp started, the Set Clamp Home Sensor did not turn On within 200ms.

Initial Actions

- Manually operate the Eject mechanism. Check for binding, a dirty sensor, or damage.
- Check the actuator for the Set Clamp Home Sensor for damage

Procedure

Execute dC330 [012-251], Set Clamp Home Sensor. Actuate the Set Clamp Home Sensor. **The display changes.**

Y N

Check the wire between J8871 pin 2 on the Set Clamp Home Sensor and P/J8988 pin 11 on the Finisher PWB for an open or short circuit, or loose or damaged connectors. **The wire is OK.**

Y N

Repair/replace as required.

Measure the voltage between P/J8988, pins 12 and 10 on the Finisher PWB. **The voltage is approximately +5VDC.**

Y N

Replace the Finisher PWB (PL 23.16).

Measure the voltage between the P/J8988 pin 11 on the Finisher PWB and GND). Actuate the Eject Clamp Home Sensor. **The voltage changes.**

Y N

Replace the Eject Clamp Home Sensor (PL 23.11).

Replace the Finisher PWB (PL 23.16).

Alternately execute dC330 [012-052], Eject Clamp Up and [012-053], Eject Clamp Down. **The Eject Motor starts.**

Y N

Check the wires between P/J8878 pins 1~6 on the Eject Motor and P/J8983 pins 5~8 on the Finisher PWB for an open or short circuit, or loose or damaged connectors **BSD 12.14 Office Finisher LX Eject Control (1 of 2)**). **The wires are OK.**

Y N

Repair/replace as required.

Measure the resistance of the Eject Motor between each pin of P/J8878-1/3/4/6. **The resistance is approximately 2 Ohm.**

Y N

Replace the Eject Motor (PL 23.11).

Replace the Finisher PWB (PL 23.16). If the problem remains, replace the Eject Motor (PL 23.11)

A

A

Execute dC330 [012-050 Set Clamp Clutch ON]. **The Set Clamp Clutch energizes.**

Y N

Select **Stop**. Check the wires between P/J8877 pins 1 and 2 on the Set Clamp Clutch and P/J8983 pins 3 and 4 on the Finisher PWB for an open or short circuit, or loose or damaged connectors (**BSD 12.15 Office Finisher LX Eject Control (2 of 2)**. **The wires are OK.**

Y N

Repair/replace as required.

Measure the voltage between the Finisher PWB P8983-4 (+) and GND (-). **The voltage is approximately +24VDC.**

Y N

Replace the Set Clamp Clutch (PL 23.11). If the problem persists, replace the Finisher PWB (PL 23.16).

Replace the Finisher PWB (PL 23.16).

Replace the Finisher PWB (PL 23.16).

312-284 (LX) Set Clamp Home Sensor Off Failure

BSD-ON:BSD 12.14 Office Finisher LX Eject Control (1 of 2)

BSD-ON:BSD 12.15 Office Finisher LX Eject Control (2 of 2)

After the Set Clamp completed operation, the Set Clamp Home Sensor did not turn Off within the specified time.

Initial Actions

- Manually operate the Eject mechanism. Check for binding, a dirty sensor, or damage.
- Check the actuator for the Set Clamp Home Sensor for damage

Procedure

Execute dC330 [012-251], Set Clamp Home Sensor. Actuate the Set Clamp Home Sensor. **The display changes.**

Y N

Check the wire between J8871 pin 2 on the Set Clamp Home Sensor and P/J8988 pin 11 on the Finisher PWB for an open or short circuit, or loose or damaged connectors. **The wire is OK.**

Y N

Repair/replace as required.

Measure the voltage between P/J8988, pins 12 and 10 on the Finisher PWB. **The voltage is approximately +5VDC.**

Y N

Replace the Finisher PWB (PL 23.16).

Measure the voltage between the P/J8988 pin 11 on the Finisher PWB and GND). Actuate the Eject Clamp Home Sensor. **The voltage changes.**

Y N

Replace the Eject Clamp Home Sensor (PL 23.11).

Replace the Finisher PWB (PL 23.16).

Alternately execute dC330 [012-052], Eject Clamp Up and [012-053], Eject Clamp Down. **The Eject Motor starts.**

Y N

Check the wires between P/J8878 pins 1~6 on the Eject Motor and P/J8983 pins 5~8 on the Finisher PWB for an open or short circuit, or loose or damaged connectors (**BSD 12.14 Office Finisher LX Eject Control (1 of 2)**. **The wires are OK.**

Y N

Repair/replace as required.

Measure the resistance of the Eject Motor between each pin of P/J8878-1/3/4/6. **The resistance is approximately 2Ohm.**

Y N

Replace the Eject Motor (PL 23.11).

Replace the Finisher PWB (PL 23.16). If the problem remains, replace the Eject Motor (PL 23.11)

A

A

Execute dC330 [012-050 Set Clamp Clutch ON]. **The Set Clamp Clutch energizes.**

Y N

Select **Stop**. Check the wires between P/J8877 pins 1 and 2 on the Set Clamp Clutch and P/J8983 pins 3 and 4 on the Finisher PWB for an open or short circuit, or loose or damaged connectors **BSD 12.15 Office Finisher LX Eject Control (2 of 2)**. **The wires are OK.**

Y N

Repair/replace as required.

Measure the voltage between the Finisher PWB P8983-4 (+) and GND (-). **The voltage is approximately +24VDC.**

Y N

Replace the Set Clamp Clutch (PL 23.11). If the problem persists, replace the Finisher PWB (PL 23.16).

Replace the Finisher PWB (PL 23.16).

Replace the Finisher PWB (PL 23.16).

312-291 (LX) Stapler Failure

BSD-ON:BSD 12.13 Office Finisher LX Staple Control

- After the Stapler Motor turned On (Forward rotation), the Staple Head Home Sensor did not switch from Off to On within the specified time.
- After the Stapler Motor turned On (Reverse rotation), the Staple Head Home Sensor did not turn On within the specified time.

Initial Actions

Check the Stapler for jammed staples or an incorrectly installed staple cartridge.

Procedure

Execute dC330 [012-046], Staple Motor FWD, and [012-047], then Staple Motor REV. **The Stapler cycles.**

Y N

Check the wires between J8887, pins 1~4 on the Stapler Assembly and P/J8981 pins 9~12 on the Finisher PWB for an open or short circuit, or loose or damaged connectors. If the wires are OK, the Stapler Assembly (PL 23.8). If the problem continues, replace the Finisher PWB (PL 23.16).

Select **Stop**. Execute [012-244], Staple Home Sensor. **The display is “Low.”**

Y N

There is +5 VDC from pin 5 to pin 1 of J8886 on the Stapler Assembly.

Y N

Check the wires from P/J8981, pins 4 and 8, to J8886 pins 5 and 1 for an open circuit. If the wires are OK, replace the Finisher PWB (PL 23.16).

Check the wire from J8886 pin 4 to P/J8981 pin 5 for an open circuit. If the wire is OK, replace the Stapler Assembly (PL 23.8).

Go to **BSD 12.13 Office Finisher LX Staple Control** Check for an intermittent connection. If the check is good, replace the Stapler Assembly (PL 23.8). If the problem continues, replace the Finisher PWB (PL 23.16).

312-295 (LX) Stapler Move Position Sensor On Failure

BSD-ON:BSD 12.12 Office Finisher LX Staple Positioning

- After the Stapler started moving to the staple position, the Stapler Move Position Sensor did not turn On within 2sec.
- After the Stapler completed moving to the Staple Position, the Stapler Move Position Sensor did not turn On.

Initial Actions

Check the Stapler, Base Frame, and Rail (PL 23.8) for freedom of movement.

Procedure

Execute dC330 [012-241], Stapler Move Position Sensor. Move the Stapler by hand from the Home position to the staple position and back. **The display changes.**

Y N

Check the wire between J8885 pin 2 on the Stapler Move Position Sensor and P/J8981 pin 2 on the Finisher PWB for an open or short circuit, or loose or damaged connectors. **The wire is OK.**

Y N

Repair/replace as required.

Measure the voltage between P/J8981, pins 3 and 1 on the Finisher PWB **BSD 12.12 Office Finisher LX Staple Positioning**. **The voltage is approximately +5VDC.**

Y N

Replace the Finisher PWB (PL 23.16).

Measure the voltage between P/J8981 pin 2 on the Finisher PWB and GND **BSD 12.12 Office Finisher LX Staple Positioning** Move the Stapler by hand from the Home position to the staple position and back. **The voltage changes.**

Y N

Replace the Stapler Move Position Sensor (PL 23.8).

Replace the Finisher PWB (PL 23.16).

Alternately execute dC330 [012-045], Staple Move Motor Rear and [012-042], Staple Move Motor Front. **The Stapler Move Motor moves.**

Y N

Check the wires between P/J8981 pins 13~16 on the Finisher PWB and P/J8888 on the Stapler Move Motor **BSD 12.12 Office Finisher LX Staple Positioning** for an open or short circuit, or loose or damaged connectors. **The wires are OK.**

Y N

Repair/replace as required.

Replace the Staple Move Motor (PL 23.8). If the problem persists, replace the Finisher PWB (PL 23.16).

Go to **BSD 12.12 Office Finisher LX Staple Positioning** Check for an intermittent connection. If the check is good, replace the Stapler Assembly (PL 23.8). If the problem continues, replace the Finisher PWB (PL 23.16).

312-296 (LX) Staple Move Sensor Off Failure

BSD-ON:BSD 12.12 Office Finisher LX Staple Positioning

- After the Stapler started moving to the Staple Position and the Staple Move Sensor turned Off, the Staple Move Sensor did not turn Off within 500ms.
- After the Staple Position had been fixed, the Staple Move Sensor turned Off.
- After the Staple Move Sensor turned On when paper passed through the Dual Staple 1 Position while moving to the Rear Staple Position, the Staple Move Sensor did not turn Off within 500ms.

Initial Actions

Check the Stapler, Base Frame, and Rail (PL 23.8) for freedom of movement.

Procedure

Execute dC330 [012-241], Stapler Move Position Sensor. Move the Stapler by hand from the Home position to the staple position and back. **The display changes.**

Y N

Check the wire between J8885 pin 2 on the Stapler Move Position Sensor and P/J8981 pin 2 on the Finisher PWB for an open or short circuit, or loose or damaged connectors. **The wire is OK.**

Y N

Repair/replace as required.

Measure the voltage between P/J8981, pins 3 and 1 on the Finisher PWB **BSD 12.12 Office Finisher LX Staple Positioning**. **The voltage is approximately +5VDC.**

Y N

Replace the Finisher PWB (PL 23.16).

Measure the voltage between P/J8981 pin 2 on the Finisher PWB and GND **BSD 12.12 Office Finisher LX Staple Positioning**). Move the Stapler by hand from the Home position to the staple position and back. **The voltage changes.**

Y N

Replace the Stapler Move Position Sensor (PL 23.8).

Replace the Finisher PWB (PL 23.16).

Alternately execute dC330 [012-045], Staple Move Motor Rear and [012-042], Staple Move Motor Front. **The Stapler Move Motor moves.**

Y N

Check the wires between P/J8981 pins 13~16 on the Finisher PWB and P/J8888 on the Stapler Move Motor **BSD 12.12 Office Finisher LX Staple Positioning** for an open or short circuit, or loose or damaged connectors. **The wires are OK.**

Y N

Repair/replace as required.

Replace the Staple Move Motor (PL 23.8). If the problem persists, replace the Finisher PWB (PL 23.16).

A

A

Go to **BSD 12.12 Office Finisher LX Staple Positioning** Check for an intermittent connection. If the check is good, replace the Stapler Assembly (PL 23.8). If the problem continues, replace the Finisher PWB (PL 23.16).

312-300 (LX) Eject Cover Open

BSD-ON:BSD 12.4 Office Finisher LX Interlock Switching

NOTE: *The chain/link fault code for this RAP is an internal machine code and is never displayed or logged in Fault Code History. Use this RAP to troubleshoot persistent machine status conditions that cannot be cleared by performing the indicated process (e.g., loading paper, closing a cover, replacing a CRU, etc). Entry to this RAP is usually via the Machine Status Faults RAP located in the Other Faults section, or a chain/link listing on a BSD.*

Eject Cover Switch open was detected.

Initial Actions

- Ensure that the Eject Cover is down
- Check Eject Cover Switch for improper installation
- Check Eject Cover Switch connectors for connection failure
- Check Actuator part for deformation

Procedure

Enter dC330 [012-300], Eject Cover Switch (PL 23.11). Select **Start**. Actuate the Eject Cover Switch. **The display changes**

Y N

Select **Stop**. Check continuity of the Eject Cover Switch (J8889, pin 1 to pin 2). **The continuity check is OK.**

Y N

Replace the Eject Cover Switch (PL 23.11).

Check continuity between the Eject Cover Switch and the Finisher PWB (J8982 pin 1 to. J8889 pin 1, and J8889 pin2 to J8889 pin 7. If the check is OK, replace the Finisher PWB (PL 23.16).

Select **Stop**. If the problem continues, replace the Finisher PWB (PL 23.16).

312-302 (LX) Finisher Front Door Open

BSD-ON:BSD 12.4 Office Finisher LX Interlock Switching

NOTE: *The chain/link fault code for this RAP is an internal machine code and is never displayed or logged in Fault Code History. Use this RAP to troubleshoot persistent machine status conditions that cannot be cleared by performing the indicated process (e.g., loading paper, closing a cover, replacing a CRU, etc). Entry to this RAP is usually via the Machine Status Faults RAP located in the Other Faults section, or a chain/link listing on a BSD.*

The Finisher Front Cover is detected as open during operation.

Initial Actions

- Check for damage to the Finisher Front Door, door latches and hinges
- Check for damage or foreign material in the Finisher Front Door Interlock Switch detect area
- Check the connectors between the Finisher Front Door Interlock Switch and the Finisher PWB

Procedure

Execute dC330 [012-302], Front Door Interlock Switch. Open/close the Finisher Front Cover. **The display changes.**

Y N

Open the Front Door and cheat the Front Door Interlock Switch **The display changes.**

Y N

Check the wires between J8982 pin 3 and J8891 pin 2B, and from J8891 pin 2A to J8982 pin 2 for an open or short circuit, or a loose or damaged connector. **The wires are OK.**

Y N

Repair/reconnect as required.

Remove the cheater. Measure the voltage between J8891 pin 2A on the Front Door Interlock Switch and GND (**BSD 12.4 Office Finisher LX Interlock Switching**). **The voltage is approximately +5VDC.**

Y N

Check the wire from J8891 pin 2A to J8982 pin 3 for an open or short circuit, or a loose or damaged connector. If the wires are OK, replace the Finisher PWB (PL 23.16).

Cheat the Interlock Switch. **The voltage drops to 0 VDC.**

Y N

Replace the Front Door Interlock Switch (PL 23.16).

Replace the Finisher PWB (PL 23.16).

Check the actuator for damage or misalignment

Check the Interlock circuit for an intermittent condition **BSD 12.4 Office Finisher LX Interlock Switching** If the problem continues, replace the Finisher PWB (PL 23.16).

312-303 (LX) Finisher H-Transport Cover Open

BSD-ON:BSD 12.6 Office Finisher LX Horizontal Transportation

NOTE: *The chain/link fault code for this RAP is an internal machine code and is never displayed or logged in Fault Code History. Use this RAP to troubleshoot persistent machine status conditions that cannot be cleared by performing the indicated process (e.g., loading paper, closing a cover, replacing a CRU, etc). Entry to this RAP is usually via the Machine Status Faults RAP located in the Other Faults section, or a chain/link listing on a BSD.*

The Finisher H-Transport Cover is open.

Initial Actions

- Check the installation of the H-Transport Open Sensor
- Opening/closing of the Finisher H-Transport Cover.

Procedure

Execute dC330 [012-303], H-Transport Open Sensor. Actuate the H-Transport Open Sensor (PL 23.4). **The display changes.**

Y N

Check the wire between J8860 pin 2 and J8987 pin 2 for an open or short circuit, or a loose or damaged connector. **The wire is OK.**

Y N

Repair/reconnect as required.

Measure the voltage between J8987, pins 3 and 1 on the Finisher PWB (**BSD 12.6 Office Finisher LX Horizontal Transportation** . **The voltage is approximately +5VDC.**

Y N

Replace the Finisher PWB (PL 23.16).

Measure the voltage between J8987, pin 2 on the Finisher PWB and GND (**BSD 12.6 Office Finisher LX Horizontal Transportation**). Actuate the H-Transport Open Sensor. **The voltage changes.**

Y N

Replace the H-Transport Open Sensor (PL 23.4).

Replace the Finisher PWB (PL 23.16).

If the problem continues, replace the Finisher PWB (PL 23.16).

312-334 (LX) Download Failure

Failure in previous download (abnormal termination during download); can only start in Download Mode upon turning power on.

Procedure

Download defective; check the following:

- Cable connection between Finisher and IOT, not connected or defective
- Finisher power cable plugged in properly
- Reload or upgrade Controller firmware using GP 9.
- Replace Finisher PWB (PL 23.16)

312-700 (LX) Punch Box Nearly Full

BSD-ON:BSD 12.7 Office Finisher LX Punch

NOTE: *The chain/link fault code for this RAP is an internal machine code and is never displayed or logged in Fault Code History. Use this RAP to troubleshoot persistent machine status conditions that cannot be cleared by performing the indicated process (e.g., loading paper, closing a cover, replacing a CRU, etc). Entry to this RAP is usually via the Machine Status Faults RAP located in the Other Faults section, or a chain/link listing on a BSD.*

Punch Box nearly full.

Initial Actions

- Empty the Punch Box and re-insert
- Check for damage to the detection part of Punch Box Set SNR on the back side of Punch Box
- Check for foreign matter (pieces of paper, punch chips, etc.) is in the insertion part of Punch Box
- Check that the user has not removed punch wastes before Punch Box Nearly Full indication. The number of punched sheets is reset only after Punch Box Nearly Full indication appears. The status of punch waste count based on sheet count can be checked with dC131 [763-639]
- Refer to Table 1 Related NVM Locations abnormal or out of range values using dC131

Table 1 Related NVM Locations

NVM Location	Description	Range
763-605	Sets the type of installed puncher (number of punch holes).0= Not set 2=3H 3=2/3H 5=2/4H 6=Swd4H	Min=0 Max=5 Default=0
763-639	The number of sheets when punch waste is nearly full. (Valid when the value of 763-605 is 5)	Min=0 Max=1500 Default=500
763-641	Method to count punch wastes for heavyweight paper. When a heavyweight sheet is punched it is counted as 1 + N sheets for counting punch waste.	Min=0 Max=4 Dafault=1
763-775	Sheet count when punch waste is nearly full. (Valid when the value of 763-605 is 2 or 3.)	Min=0 Max=1500 Dafault=500
763-776	Sheet count when punch waste is nearly full. (Valid when the value of 763-605 is 6.)	Min=0 Max=1500 Dafault=250

Procedure

Perform the following:

- Check the circuit of the Punch Box Set Sensor using BSD 12.7 Office Finisher LX Punch
- Replace Finisher PWB (PL 23.16)

312-901 (LX) H-Transport Entrance Sensor Static Jam

BSD-ON:BSD 12.6 Office Finisher LX Horizontal Transportation

Paper remains on the H-Transport Entrance Sensor.

Initial Actions

Check the paper path. If no paper is found continue with this RAP.

Clean the sensor.

Procedure

Execute dC330 [012-190], H-Transport Entrance Sensor. Actuate the H-Transport Entrance Sensor (PL 23.4). **The display changes.**

Y N

Check the wire between J8861 pin 2 and J8987 pin 6 for an open or short circuit, or a loose or damaged connector. **The wire is OK.**

Y N

Repair/reconnect as required.

Measure the voltage between J8987, pins 4 and 5 on the Finisher PWB (**BSD 12.6 Office Finisher LX Horizontal Transportation**). **The voltage is approximately +5VDC.**

Y N

Replace the Finisher PWB (PL 23.16).

Measure the voltage between J8987, pin 6 on the Finisher PWB and GND **BSD 12.6 Office Finisher LX Horizontal Transportation**. Actuate the H-Transport Entrance Sensor. **The voltage changes.**

Y N

Replace the H-Transport Entrance Sensor (PL 23.4).

Replace the Finisher PWB (PL 23.16).

If the problem continues, replace the Finisher PWB (PL 23.16).

312-903 (LX) Paper Remains at Compiler Exit Sensor

BSD-ON:BSD 12.8 Office Finisher LX Transportation

Paper remains on the Compiler Exit Sensor.

Initial Actions

Check the paper path. If no paper is found continue with this RAP.

Clean the sensor.

Procedure

Execute dC330 [012-150], Compiler Exit Sensor. Actuate the Compiler Exit Sensor (PL 23.14). **The display changes.**

Y N

Check the wire between J8869 pin 2 and P/J8988 pin 5 for an open or short circuit, or a loose or damaged connector. **The wire is OK.**

Y N

Repair/reconnect as required.

Measure the voltage between P/J8988, pins 6 and 4 on the Finisher PWB (**BSD 12.8 Office Finisher LX Transportation**). **The voltage is approximately +5VDC.**

Y N

Replace the Finisher PWB (PL 23.16).

Measure the voltage between P/J8988, pin 5 on the Finisher PWB and GND (**BSD 12.8 Office Finisher LX Transportation**).Actuate the Compiler Exit Sensor. **The voltage changes.**

Y N

Replace the Compiler Exit Sensor (PL 23.14).

Replace the Finisher PWB (PL 23.16).

If the problem continues, replace the Finisher PWB (PL 23.16).

312-905 (LX) Compiler Tray No Paper Sensor Static JAM

BSD-ON:BSD 12.11 Office Finisher LX Tamping and Offset (2 of 2)

Paper remains on the Compiler Tray No Paper Sensor.

Initial Actions

Check the paper path. If no paper is found continue with this RAP.

Clean the sensor.

Procedure

Enter dC330 [012-151], Compiler Tray No Paper Sensor. Select **Start**. Actuate the Compiler Tray No Paper Sensor. **The display changes.**

Y N

Check the wire between J8880 pin 2 and J8984 pin 2 on the Finisher PWB for an open or short circuit, or a loose or damaged connector. **The wire is OK.**

Y N

Repair/reconnect as required.

Measure the voltage between J8984 pins 3 and 1 on the Finisher PWB (**BSD 12.11 Office Finisher LX Tamping and Offset (2 of 2)**. **The voltage is approximately +5VDC.**

Y N

Replace the Finisher PWB (PL 23.16).

Measure the voltage between J8984 pin 2 on the Finisher PWB and GND (**BSD 12.11 Office Finisher LX Tamping and Offset (2 of 2)**. Actuate the Compiler Tray No Paper Sensor. **The voltage changes.**

Y N

Replace the Compiler Tray No Paper Sensor (PL 23.12).

Replace the Finisher PWB (PL 23.16).

If the problem continues, replace the Finisher PWB (PL 23.16).

312-916 (LX) Mix Full Stack

BSD-ON:BSD 1.1 - Main Power On (1 of 2)

BSD-ON:BSD 2.1 - UI

BSD-ON:BSD 3.1 - SBC - MCU Communication

BSD-ON:BSD 6.1 - Document Illumination

BSD-ON:BSD 12.16 Office Finisher LX Stacker Tray Control

BSD-ON:BSD 16.1 - SBC

NOTE: *The chain/link fault code for this RAP is an internal machine code and is never displayed or logged in Fault Code History. Use this RAP to troubleshoot persistent machine status conditions that cannot be cleared by performing the indicated process (e.g., loading paper, closing a cover, replacing a CRU, etc). Entry to this RAP is usually via the Machine Status Faults RAP located in the Other Faults section, or a chain/link listing on a BSD.*

Any of the following conditions could cause this fault:

- The output paper stacked on the Finisher Stacker Tray reaches capacity (for the same paper size only).
- The paper size in either the process or cross-process direction of the current job is larger than the top sheet size of the previous job
- The top sheet size (width) of previous job is less than 279.4mm and Staple Mode is changed
- The top sheet size of the previous job is “unknown”
- The specified number of sheets/sets is loaded in the stacker tray in Booklet Staple job. (The number can be changed in NVM.)
- The specified number of sheets/sets is loaded in the stacker tray in Booklet Non-Staple job. (The number can be changed in NVM.)
- When one Booklet Staple/Non-Staple job is completed. (Detection can be canceled in NVM.)
- When a Booklet Staple/Non-Staple job is started while mixed-size sheets are stacked in the stacker tray. (Detection can be canceled in NVM.)
- When a Booklet Staple/Non-Staple job is started, after which mixed-size sheets are stacked in the stacker tray. (Detection can be canceled in NVM.)
- Refer to Table 1 Related NVM Locations and Table 2 Stacking History Status NVM Locations and use dC131 to check NVM values. If necessary, change NVM values as indicated in previous items of this listing.

Table 1 Related NVM Locations

NVM Location	Description	Range
763-622	Limits the encoder value of Mix Full Stack position.	Min=1 Max=28 Default=26

Table 1 Related NVM Locations

NVM Location	Description	Range
763-623	Disables mixed-size stacking after Mix Stack position is detected. 0: enable1: disable	Min=0 Max=1 Default=1
763-633	Encoder limit to detect full stack position when smaller than B4 size and booklet-staple sets are included.	Min=1 Max=90 Dafault=90
763-634	Encoder limit to detect full stack position when stacked sheets include papers of B4 or above and booklet stapled sets.	Min=1 Max=90 Dafault=90
763-635	Encoder limit to detect full stack position when stacked sheets include papers smaller than B4 and booklet non-stapled sets (excluding booklet stapled sets).	Min=1 Max=90 Dafault=90
763-636	Encoder limit to detect full stack position when stacked sheets include papers of B4 or above and booklet non-stapled sets (excluding booklet stapled sets).	Min=1 Max=90 Dafault=90
763-637	The maximum number of booklet stapled sheets that can be stacked.	Min=1 Max=200 Dafault=60
763-638	The maximum number of booklet non-stapled sheets that can be stacked.	Min=1 Max=200 Dafault=50
763-711	The maximum number of booklet non-stapled sheets that can be stacked.	Min=1 Max=255 Dafault=50
763-712	Number of sets when Booklet Full is detected for the sheet length of B4S or above.(standard setting of 15 sheet / set)	Min=1 Max=255 Dafault=50
763-715	With default setting mix-size stack occurs and stacking stops when one booklet job (booklet staple booklet non-staple) is conducted.Whether to apply such limit can be selected. 0: Limit 1: Not limit	Min=0 Max=1 Dafault=1
763-716	Notifies mix stack full right before booklet mix stacking starts. Whether to apply such limit can be selected.0: Not limit (Even for booklet the same condition as normal mix stack full is applied. The mix stack full notice is sent based on the encoder limit to detect mix full stack position.)1: Limit (Notifies mix stack full right before booklet mix stacking starts.)	Min=0 Max=1 Dafault=1
763-717	Sets the encoder position to detect mix stack full when one booklet job (booklet staple and booklet non-staple jobs) completes. If the encoder value exceeds the setting value mix stack full is detected when a job completes.	Min=1 Max=255 Dafault=6
763-718	Sets the tray encoder position to cancel Stacker Tray Full Mix Full and Set Count Full.	Min=1 Max=255 Dafault=6

Table 2 Stacking History Status NVM Locations

NVM Location	Description	Range
763-670	Setting value for sub-paddle operation time [Staple, small size sheet (paper feed length?216.0), plain/recycled paper, (Oakmont and Northwood), specified number of compiled sheets or more]	Min=1 Max=100 Dafault=5
763-671	Setting value for sub-paddle operation time [Staple, small size sheet (paper feed length?216.0), plain/recycled paper, (Oakmont and Northwood), less than the specified number of compiled sheets]	Min=1 Max=100 Dafault=5
763-672	Setting value for sub-paddle operation time (Staple, small size sheet (paper feed length?216.0), specified number of compiled sheets or more)	Min=1 Max=100 Dafault=10
763-673	Setting value for sub-paddle operation tim e[Staple, small size sheet (paper feed length?216.0), less than the specified number of compiled sheets]	Min=1 Max=100 Dafault=10
763-674	Setting value for sub-paddle operation time [Staple, A3S/11x17S, plain paper, (Oakmont, and Northwood/Charger), specified number of compiled sheets or more]	Min=1 Max=100 Dafault=40
763-675	Setting value for sub-paddle operation time [Staple, A3S/11x17S, plain paper, (Oakmont, and Northwood/Charger), less than the specified number of compiled sheets]	Min=1 Max=100 Dafault=65
763-676	Setting value for sub-paddle operation time [Staple, A3S/11x17S, plain paper, (other than Oakmont, and Northwood/Charger), specified number of compiled sheets or more]	Min=1 Max=100 Dafault=
763-677	Setting value for sub-paddle operation time [Staple, A3S/11x17S, plain paper, (other than Oakmont, and Northwood/Charger), less than the specified number of compiled sheets]	Min=1 Max=100 Dafault=65
763-678	Setting value for sub-paddle operation time (Staple, A3S/11x17S, recycled paper, XE, specified number of compiled sheets or more)	Min=1 Max=100 Dafault=5
763-679	Setting value for sub-paddle operation time (Staple, A3S/11x17S, recycled paper, other than XE, specified number of compiled sheets or more)	Min=1 Max=100 Dafault=65
763-681	Setting value for sub-paddle operation time (Staple, A3S/11x17S, recycled paper, other than XE, less than the specified number of compiled sheets)	Min=1 Max=100 Dafault=65
763-682	Setting value for sub-paddle operation time (Staple, A4S/8.5x11S, specified number of compiled sheets or more)	Min=1 Max=100 Dafault=10
763-683	Setting value for sub-paddle operation time (Staple, A4S/8.5x11S, less than the specified number of compiled sheets)	Min=1 Max=100 Dafault=10
763-684	Setting value for sub-paddle operation time (Staple, 8.5x13S/ 8.5x14S, specified number of compiled sheets or more)	Min=1 Max=100 Dafault=10
763-699	Setting value for sub-paddle operation time (Non-staple, A3S/ 11x17S, plain paper, less than the specified number of compiled sheets)	Min=1 Max=100 Dafault=55

Table 2 Stacking History Status NVM Locations

NVM Location	Description	Range
763-770	Number of saddle-staple sets that have already been output to Booklet Tray.	Min=0 Max=255 Dafault=0

Initial Actions

Power Off/On

Procedure

- Go to the 312-211 (LX) Stacker Tray Fail RAP.
- Ensure that the customer is programming a job within the parameters of the machine utilizing the UI.
- Disconnect then reconnect the IIT, UI I/F, SBC, MCU and all PWBs connected to them (RAM, Firmware module, EEPROM)
- Reload or upgrade Controller software using GP 9.
- Replace the MCU PWB (PL 18.1)
- Replace the Hard Drive (PL 35.2).
- Replace the SBC PWB (PL 35.2) (If not fixed by this, reinstall the original SBC PWB & MCU PWB).

312-917 (LX) Stacker Tray Staple Set Over Count

BSD-ON:BSD 1.1 - Main Power On (1 of 2)

BSD-ON:BSD 2.1 - UI

BSD-ON:BSD 3.1 - SBC - MCU Communication

BSD-ON:BSD 6.1 - Document Illumination

BSD-ON:BSD 12.1 Office Finisher LX Communication (IOT-Finisher)

BSD-ON:BSD 16.1 - SBC

NOTE: *The chain/link fault code for this RAP is an internal machine code and is never displayed or logged in Fault Code History. Use this RAP to troubleshoot persistent machine status conditions that cannot be cleared by performing the indicated process (e.g., loading paper, closing a cover, replacing a CRU, etc). Entry to this RAP is usually via the Machine Status Faults RAP located in the Other Faults section, or a chain/link listing on a BSD.*

The number of stapled copies exceeded the capacity of the Stacker Tray.

Initial Actions

- Power Off/On
- Empty the tray
- Refer to Table 1 Related NVM Locations and Table 2 Stacking History Status NVM Locations and use dC131 to check for abnormal or out of range values, or to adjust values as required

Table 1 Related NVM Locations

NVM Location	Description	Range
763-624	Changes the number of non-stapled output sheets for small size.	Min=2 Max=50 Default=10
763-625	Changes the number of non-stapled output sheets for large size.	Min=2 Max=50 Default=10
763-626	The maximum number of stackable sets for small size AND single-stapled sets or mixture of non-stapled and single-stapled sets.	Min=1 Max=255 Dafault=100
763-627	The maximum number of stackable sets for large size AND single-stapled sets or mixture of non-stapled and single-stapled sets.	Min=1 Max=255 Dafault=75
763-628	The maximum number of stackable sets for small size AND dual-stapled sets or mixture of non-stapled single-stapled and dual-stapled sets.	Min=1 Max=255 Dafault=75
763-629	The maximum number of stackable sets for large size AND dual-stapled sets or mixture of non-stapled single-stapled and dual-stapled sets.	Min=1 Max=255 Dafault=75

Table 2 Stacking History Status NVM Locations

NVM Location	Description	Range
763-670	Setting value for sub-paddle operation time [Staple, small size sheet (paper feed length?216.0), plain/recycled paper, (Oakmont and Northwood), specified number of compiled sheets or more]	Min=1 Max=100 Dafault=5
763-671	Setting value for sub-paddle operation time [Staple, small size sheet (paper feed length?216.0), plain/recycled paper, (Oakmont and Northwood), less than the specified number of compiled sheets]	Min=1 Max=100 Dafault=5
763-672	Setting value for sub-paddle operation time (Staple, small size sheet (paper feed length?216.0), specified number of compiled sheets or more)	Min=1 Max=100 Dafault=10
763-673	Setting value for sub-paddle operation tim e[Staple, small size sheet (paper feed length?216.0), less than the specified number of compiled sheets]	Min=1 Max=100 Dafault=10
763-674	Setting value for sub-paddle operation time [Staple, A3S/11x17S, plain paper, (Oakmont, and Northwood/Charger), specified number of compiled sheets or more]	Min=1 Max=100 Dafault=40
763-675	Setting value for sub-paddle operation time [Staple, A3S/11x17S, plain paper, (Oakmont, and Northwood/Charger), less than the specified number of compiled sheets]	Min=1 Max=100 Dafault=65
763-676	Setting value for sub-paddle operation time [Staple, A3S/11x17S, plain paper, (other than Oakmont, and Northwood/Charger), specified number of compiled sheets or more]	Min=1 Max=100 Dafault=
763-677	Setting value for sub-paddle operation time [Staple, A3S/11x17S, plain paper, (other than Oakmont, and Northwood/Charger), less than the specified number of compiled sheets]	Min=1 Max=100 Dafault=65
763-678	Setting value for sub-paddle operation time (Staple, A3S/11x17S, recycled paper, XE, specified number of compiled sheets or more)	Min=1 Max=100 Dafault=5
763-679	Setting value for sub-paddle operation time (Staple, A3S/11x17S, recycled paper, other than XE, specified number of compiled sheets or more)	Min=1 Max=100 Dafault=65
763-681	Setting value for sub-paddle operation time (Staple, A3S/11x17S, recycled paper, other than XE, less than the specified number of compiled sheets)	Min=1 Max=100 Dafault=65
763-682	Setting value for sub-paddle operation time (Staple, A4S/8.5x11S, specified number of compiled sheets or more)	Min=1 Max=100 Dafault=10
763-683	Setting value for sub-paddle operation time (Staple, A4S/8.5x11S, less than the specified number of compiled sheets)	Min=1 Max=100 Dafault=10
763-684	Setting value for sub-paddle operation time (Staple, 8.5x13S/ 8.5x14S, specified number of compiled sheets or more)	Min=1 Max=100 Dafault=10
763-699	Setting value for sub-paddle operation time (Non-staple, A3S/ 11x17S, plain paper, less than the specified number of compiled sheets)	Min=1 Max=100 Dafault=55

Table 2 Stacking History Status NVM Locations

NVM Location	Description	Range
763-770	Number of saddle-staple sets that have already been output to Booklet Tray.	Min=0 Max=255 Dafault=0

Procedure

Check the connection of each Finisher PWB connector. **The connectors are securely connected.**

Y **N**

Connect the connectors.

Turn on the power again. **[312-917] reoccurs.**

Y **N**

Return to Service Call Procedures.

Replace the following in order:

1. Finisher PWB (PL 23.16)
2. MCU PWB (PL 18.1)

312-928 (LX) Scratch Sheet Compile

BSD-ON:BSD 12.1 Office Finisher LX Communication (IOT-Finisher)

Paper was detected that was either out of spec, in poor condition (wrinkled, curled) and was ejected to the compiler.

NOTE: *The chain/link fault code for this RAP is an internal machine code and is never displayed or logged in Fault Code History. Use this RAP to troubleshoot persistent machine status conditions that cannot be cleared by performing the indicated process (e.g., loading paper, closing a cover, replacing a CRU, etc). Entry to this RAP is usually via the Machine Status Faults RAP located in the Other Faults section, or a chain/link listing on a BSD.*

Initial Actions

- Check that the Top Cover can be opened and closed.
- Power Off/On.

Procedure

Check the specifications of paper. **The paper is in spec.**

Y N

Replace the paper with new paper that is in spec.

Check the condition of the paper. **The paper is in normal condition without any problem that causes the paper to be bent (dog eared) or jam.**

Y N

Resolve any problem that causes the paper to be bent or caught.

Check for a Fault Code. **Another Fault Code is displayed.**

Y N

If the problem continues, replace the Finisher PWB (PL 23.16).

Go to the appropriate Fault Code.

312-930 (LX) Stacker Tray Full

BSD-ON:BSD 12.16 Office Finisher LX Stacker Tray Control

NOTE: *The chain/link fault code for this RAP is an internal machine code and is never displayed or logged in Fault Code History. Use this RAP to troubleshoot persistent machine status conditions that cannot be cleared by performing the indicated process (e.g., loading paper, closing a cover, replacing a CRU, etc). Entry to this RAP is usually via the Machine Status Faults RAP located in the Other Faults section, or a chain/link listing on a BSD.*

The output paper stacked on the Finisher Stacker Tray reaches capacity (for mixed paper size). There are a number of different conditions that can cause this fault and those conditions differ for the different finishers.

Initial Actions

- Remove the paper from the Stacker Tray
- Power Off/On

Initial Actions

- Empty the tray
- Power Off/On
- Refer to Table 1 Related NVM Locations and Table 2 Stacking History Status NVM Locations and use dC131 to check for abnormal or out of range values, or to adjust values as required

Table 1 Related NVM Locations

NVM Location	Description	Range
763-616	Encoder limit to detect full stack position for small size (paper feed length: 216mm or shorter) AND single-stapled sets or mixture of non-stapled and single-stapled sets.	Min=1 Max=135 Default=63
763-617	Encoder limit to detect full stack position for large size (paper feed length: over 216mm) AND single-stapled sets or mixture of non-stapled and single-stapled sets.	Min=1 Max=135 Default=50
763-618	Encoder limit to detect full stack position for small size (paper feed length: 216mm or shorter) AND dual-stapled sets or mixture of non-stapled single-stapled and dual-stapled sets.	Min=1 Max=135 Default=50
763-619	Encoder limit to detect full stack position for large size (paper feed length: over 216mm) AND dual-stapled sets or mixture of non-stapled single-stapled and dual-stapled sets.	Min=1 Max=135 Default=50
763-620	Encoder limit to detect full stack position for small-size (216mm or shorter) AND non-stapled sets. (The same is applied when a booklet module is installed.)	Min=1 Max=135 Default=116
763-621	Encoder limit to detect full stack position for large-size (over 216mm) AND non-stapled sets.	Min=1 Max=135 Default=63
763-624	Changes the number of non-stapled output sheets for small size.	Min=2 Max=50 Default=10

Table 1 Related NVM Locations

NVM Location	Description	Range
763-625	Changes the number of non-stapled output sheets for large size.	Min=2 Max=50 Default=10
763-626	The maximum number of stackable sets for small size AND single-stapled sets or mixture of non-stapled and single-stapled sets.	Min=1 Max=255 Dafault=100
763-627	The maximum number of stackable sets for large size AND single-stapled sets or mixture of non-stapled and single-stapled sets.	Min=1 Max=255 Dafault=75
763-628	The maximum number of stackable sets for small size AND dual-stapled sets or mixture of non-stapled single-stapled and dual-stapled sets.	Min=1 Max=255 Dafault=75
763-629	The maximum number of stackable sets for large size AND dual-stapled sets or mixture of non-stapled single-stapled and dual-stapled sets.	Min=1 Max=255 Dafault=75

Table 2 Stacking History Status NVM Locations

NVM Location	Description	Range
763-670	Setting value for sub-paddle operation time [Staple, small size sheet (paper feed length?216.0), plain/recycled paper, (Oakmont and Northwood), specified number of compiled sheets or more]	Min=1 Max=100 Dafault=5
763-671	Setting value for sub-paddle operation time [Staple, small size sheet (paper feed length?216.0), plain/recycled paper, (Oakmont and Northwood), less than the specified number of compiled sheets]	Min=1 Max=100 Dafault=5
763-672	Setting value for sub-paddle operation time (Staple, small size sheet (paper feed length?216.0), specified number of compiled sheets or more)	Min=1 Max=100 Dafault=10
763-673	Setting value for sub-paddle operation tim e[Staple, small size sheet (paper feed length?216.0), less than the specified number of compiled sheets]	Min=1 Max=100 Dafault=10
763-674	Setting value for sub-paddle operation time [Staple, A3S/11x17S, plain paper, (Oakmont, and Northwood/Charger), specified number of compiled sheets or more]	Min=1 Max=100 Dafault=40
763-675	Setting value for sub-paddle operation time [Staple, A3S/11x17S, plain paper, (Oakmont, and Northwood/Charger), less than the specified number of compiled sheets]	Min=1 Max=100 Dafault=65
763-676	Setting value for sub-paddle operation time [Staple, A3S/11x17S, plain paper, (other than Oakmont, and Northwood/Charger), specified number of compiled sheets or more]	Min=1 Max=100 Dafault=
763-677	Setting value for sub-paddle operation time [Staple, A3S/11x17S, plain paper, (other than Oakmont, and Northwood/Charger), less than the specified number of compiled sheets]	Min=1 Max=100 Dafault=65

Table 2 Stacking History Status NVM Locations

NVM Location	Description	Range
763-678	Setting value for sub-paddle operation time (Staple, A3S/11x17S, recycled paper, XE, specified number of compiled sheets or more)	Min=1 Max=100 Dafault=5
763-679	Setting value for sub-paddle operation time (Staple, A3S/11x17S, recycled paper, other than XE, specified number of compiled sheets or more)	Min=1 Max=100 Dafault=65
763-681	Setting value for sub-paddle operation time (Staple, A3S/11x17S, recycled paper, other than XE, less than the specified number of compiled sheets)	Min=1 Max=100 Dafault=65
763-682	Setting value for sub-paddle operation time (Staple, A4S/8.5x11S, specified number of compiled sheets or more)	Min=1 Max=100 Dafault=10
763-683	Setting value for sub-paddle operation time (Staple, A4S/8.5x11S, less than the specified number of compiled sheets)	Min=1 Max=100 Dafault=10
763-684	Setting value for sub-paddle operation time (Staple, 8.5x13S/ 8.5x14S, specified number of compiled sheets or more)	Min=1 Max=100 Dafault=10
763-699	Setting value for sub-paddle operation time (Non-staple, A3S/ 11x17S, plain paper, less than the specified number of compiled sheets)	Min=1 Max=100 Dafault=55
763-770	Number of saddle-staple sets that have already been output to Booklet Tray.	Min=0 Max=255 Dafault=0

Procedure

- Go to the 312-211 (LX) Stacker Tray Fail RAP.
- Remove the paper from the Stacker Tray
- Reload or upgrade Controller software using GP 9.
- Disconnect then reconnect the SBC PWB, MCU PWB all PWBs connected to them (RAM, Firmware module, EEPROM)
- If the fault is still occurring replace the Finisher PWB (PL 23.16).

312-935 (LX) Paper at Finisher Entrance Sensor

BSD-ON:BSD 12.8 Office Finisher LX Transportation

Control logic reports paper at the Finisher Entrance Sensor.

Initial Actions

- Check for obstructions in the paper path
- Check that the Finisher is docked correctly to ensure proper Transport Gate operation

Procedure

Enter dC330 [012-100], Finisher Entrance Sensor. Select **Start**. Actuate the Finisher Entrance Sensor. **The display changes.**

Y N

Check the wire between J8868 pin 2 and P/J8988 pin 2 for an open or short circuit, or a loose or damaged connector. **The wire is OK.**

Y N

Repair/reconnect as required.

Measure the voltage between P/J8988 pins 3 and 1 on the Finisher PWB (**BSD 12.8 Office Finisher LX Transportation**). **The voltage is approximately +5VDC.**

Y N

Replace the Finisher PWB (PL 23.16).

Measure the voltage between P/J8988 pin 2 on the Finisher PWB and GND (**BSD 12.8 Office Finisher LX Transportation**). Actuate the Finisher Entrance Sensor. **The voltage changes.**

Y N

Replace the Finisher Entrance Sensor (PL 23.14).

Replace the Finisher PWB (PL 23.16).

Replace the Finisher PWB (PL 23.16).

312-949 (LX) Punch Box Missing

BSD-ON:BSD 12.7 Office Finisher LX Punch

Punch Box Set Sensor detected Punch Box to be missing.

Initial Actions

- Ensure that the Punch Box is present and installed properly

Procedure

Enter dC330 [012-275], Punch Box Set Sensor (PL 23.5). Select **Start**. Remove and insert the Punch Box manually. **The display changes**

Y N

Select **Stop**. Check continuity between the Punch Box Set Sensor (J8866); J8863; and the Finisher PWB (J8987). **The continuity check is OK.**

Y N

Repair the open circuit or short circuit.

Replace the Punch Box Set Sensor (PL 23.5). If the problem continues, replace the Finisher PWB (PL 23.16).

Check the Punch Box Set Sensor Actuator and Punch Box Guide for deformation. **The Punch Box can be removed and inserted properly.**

Y N

Repair or replace the Punch Box (PL 23.2).

Select **Stop**. If the problem continues, replace the Finisher PWB (PL 23.16).

312-963 (LX) Punch Box Full

BSD-ON:BSD 12.7 Office Finisher LX Punch

NOTE: *The chain/link fault code for this RAP is an internal machine code and is never displayed or logged in Fault Code History. Use this RAP to troubleshoot persistent machine status conditions that cannot be cleared by performing the indicated process (e.g., loading paper, closing a cover, replacing a CRU, etc). Entry to this RAP is usually via the Machine Status Faults RAP located in the Other Faults section, or a chain/link listing on a BSD.*

Punch Box full.

Initial Actions

- Empty the Punch Box and re-insert
- Check for damage to the detection part of Punch Box Set SNR on the back side of Punch Box
- Check for foreign matter (pieces of paper, punch chips, etc.) is in the insertion part of Punch Box
- Check that the user has not removed punch wastes before Punch Box Nearly Full indication. The number of punched sheets is reset only after Punch Box Nearly Full indication appears. The status of punch waste count based on sheet count can be checked with dC131 [763-639]

Procedure

Perform the following:

- Check the circuit of the Punch Box Set Sensor using BSD 12.7 Office Finisher LX Punch
- Replace Finisher PWB (PL 23.16)

312-976 (LX) Staple Status Fault

BSD-ON:BSD 12.13 Office Finisher LX Staple Control

After the Stapler Motor turned On (Forward rotation), the system did not detect that the Staple Head Home Sensor switched from Off to On within the specified time.

After the Stapler Motor turned On (Reverse rotation), the Staple Head Home Sensor did not turn On within the specified time.

Initial Actions

- Open and Close the Finisher Front door
- Ensure that there is no paper in the compiler tray
- Check for foreign material around the stapler in the compile tray
- Power Off/On
- This problem can be caused by lack of stapler penetration force when media outside the spec is used.

  NOTE: *When the penetration force is not enough, the maximum number of sheets in a set to be stapled should be reduced with NVM. (763-630)*

Procedure

- Go to the 312-291 (LX) Stapler Failure RAP
- Disconnect then reconnect the SBC, MCU all PWBs connected to them (RAM, Firmware module, EEPROM)
- Reload or upgrade Controller software using GP 9.

312-977 (LX) Stapler Feed Ready - TBD - Reviewer see note

BSD-ON:BSD 12.13 Office Finisher LX Staple Control

NOTE: Reviewer - TBD - please correct the description below - it is verbatim from the FS 9.031 copy marked up by K Lamora, but does not seem to make sense

During starting operation of staple head at initialization, Stapler Ready SNR is not ON before the count of empty hitting of staple head reaches the defined number (13).

Staple Ready SNR is OFF just before stapling.

Procedure

- Go to the 312-291 (LX) Stapler Failure RAP.
- If the problem remains after completing the checks in the RAP, disconnect then reconnect the SBC, MCU all PWBs connected to them (RAM, Firmware module, EEPROM)
- Reload or upgrade Controller software using GP 9.

312-978 (LX) Booklet Staple NG - TBD

BSD-ON:BSD 12.1 Office Finisher LX Communication (IOT-Finisher)

BSD-ON:BSD 12.5 Office Finisher LX Booklet Interlock Switching

BSD-ON:BSD 12.18 Office Finisher LX Booklet Staple Control (1 of 2 - Front)

BSD-ON:BSD 12.19 Office Finisher LX Booklet Staple Control (2 of 2 -Rear)

Booklet Stapler started operating, but Ready signal did not turn to Ready state in a specified period of time

Booklet Staple Cam Switch F/R is ON (returns to home position) within a certain period of time after Booklet Staple Motor F/R fails to clinch normally and starts to rotate reversely

Any of the following can cause this problem:

- Lack of penetration force of Booklet Stapler when media outside the spec is used. Note: When the penetration force is not enough, the maximum number of sheets in a set to be stapled should be reduced with NVM. (763-710)

  NOTE: *When the penetration force is not enough, the maximum number of sheets in a set to be stapled can be reduced by accessing NVM location [763-710]. The minimum value is 2, the maximum value is 25 and the default value is 15.*

- The position of Booklet Front Stapler (upper) and that of Clincher (lower) do not match each other due to the deformation of Booklet Unit
- Staple pin jam (staple pin remains in the staple cartridge)
- Foreign matter around the Booklet Front/Rear Stapler in the Booklet Unit
- Booklet Front/Rear Stapler Unit failure.

Initial Actions

- Open the eject cover, remove any paper in the compiler tray and close the cove
- Open and close the booklet cover

Procedure

- Go to the 312-249 (LX) Booklet Front Stapler RAP and the 312-268 (LX) Booklet Rear Stapler RAP.
- If the problem remains after completing the checks in those RAPs, disconnect then reconnect the SBC, MCU all PWBs connected to them (RAM, Firmware module, EEPROM)
- If the problem remains continue with the following steps:
  - Reload or upgrade Controller software using GP 9.
  - Check the wiring between the Finisher PWB and the MCU PWB using (BSD 12.1 Office Finisher LX Communication (IOT-Finisher))
  - Replace the Finisher PWB (PL 23.16)
  - Replace the MCU PWB (PL 18.1)

312-979 (LX) Stapler Near Empty

- Low Staple Sensor ON is detected during power ON and Interlock Close
- Low Staple Sensor ON is detected just before the Staple Head Close operation

Procedure

Perform the following steps:

Check the Staple Cartridge. If the Staples are NOT low, go to the [312-291 (LX)] Stapler Failure RAP

If the problem cannot be resolved using the 312-291 Stapler Failure RAP, reload or upgrade Controller software using GP 9.

312-982 (LX) Finisher Stacker Tray Lower Safety

BSD-ON:BSD 12.16 Office Finisher LX Stacker Tray Control

Stacker tray moved down past the lower limit position.

Initial Actions

Power Off/On

Procedure

- Go to 312-213 (LX) Stacker Tray Lower Limit Failure RAP
- Disconnect then reconnect the SBC, MCU all PWBs connected to them (RAM, Firmware module, EEPROM)
- Reload or upgrade Controller software using GP 9

312-984 (LX) Booklet Low Staple Front

BSD-ON:BSD 12.18 Office Finisher LX Booklet Staple Control (1 of 2 - Front)

The Booklet Low Staple Software detects low staple condition just before Booklet Staple Front starts operating.

Procedure

- Go to 312-291 (LX) Stapler Failure RAP.
- Disconnect then reconnect the SBC, MCU all PWBs connected to them (RAM, Firmware module, EEPROM)
- Reload or upgrade Controller software using GP 9.

312-989 (LX) Booklet Low Staple Rear

BSD-ON:BSD 12.19 Office Finisher LX Booklet Staple Control (2 of 2 -Rear)

The Booklet Low Staple Software detects low staple condition just before Booklet Staple Front starts operating.

Procedure

- Go to 312-291 (LX) Stapler Failure RAP.
- Disconnect then reconnect the SBC, MCU all PWBs connected to them (RAM, Firmware module, EEPROM)
- Reload or upgrade Controller software using GP 9.

313-210 (LX) Booklet Staple Move Home Sensor ON

BSD-ON:BSD 12.17 Office Finisher LX Booklet Staple Positioning

Booklet Staple Move Home Sensor does not turn on within designated time period

Initial Actions

- Ensure the Staple Head is free from obstructions
- Check for 313-306 or 313-307 Faults.

Procedure

Execute dC330 [013-143], Booklet Staple Move Home Sensor. Move the Booklet Staplers to block and unblock the sensor (PL 23.18). **The display changes.**

Y N

Check the wire between J8897 pin 2 and P/J8991 pin 2 for an open or short circuit, or a loose or damaged connector. **The wire is OK.**

Y N

Repair/reconnect as required.

Measure the voltage between P/J8991, pins 3 and 1 on the Booklet PWB. **The voltage is approx. +5VDC.**

Y N

Replace the Booklet PWB (PL 23.21).

Measure the voltage between P/J8991 pin 2 on the Booklet PWB and GND. Actuate the Booklet Staple Move Home Sensor. **The voltage changes.**

Y N

Replace the Booklet Staple Move Home Sensor (PL 23.18).

Replace the Booklet PWB (PL 23.21).

Alternately execute dC330 [013-028], Stapler Move Motor In and [013-029], Stapler Move Motor Out. **The Stapler Move Motor moves.**

Y N

Check the wires between P/J8992 pins 1~6 on the Booklet PWB and P/J8906 on the Booklet Stapler Move Motor for an open or short circuit, or loose or damaged connectors. **The wires are OK.**

Y N

Repair/replace as required.

Monitor the voltage at P/J8994, pin 3. Alternately execute dC330 [013-028], Stapler Move Motor In and [013-029], Stapler Move Motor Out. **An AC clock pulse is detected.**

Y N

Check the wire between P/J8994, pin 3 and P/J8995 pin 4. If the wire is OK, replace the Finisher PWB (PL 23.16).

Replace the Booklet Stapler Move Motor (PL 23.18). If the problem persists, replace the Booklet PWB (PL 23.21).

Go to **BSD 12.17 Office Finisher LX Booklet Staple Positioning** 5 and check for an intermittent circuit.

313-211 (LX) Booklet Staple Move Home Sensor OFF

BSD-ON:BSD 12.17 Office Finisher LX Booklet Staple Positioning

Booklet Staple Move Home Sensor does not turn off within designated time period

Initial Actions

- Ensure the Staple Head is free from obstructions
- Check for 313-306 or 313-307 Faults.

Procedure

Execute dC330 [013-143], Booklet Staple Move Home Sensor. Move the Booklet Staplers to block and unblock the sensor (PL 23.18). **The display changes.**

Y N

Check the wire between J8897 pin 2 and P/J8991 pin 2 for an open or short circuit, or a loose or damaged connector. **The wire is OK.**

Y N

Repair/reconnect as required.

Measure the voltage between P/J8991, pins 3 and 1 on the Booklet PWB. **The voltage is approx. +5VDC.**

Y N

Replace the Booklet PWB (PL 23.21).

Measure the voltage between P/J8991 pin 2 on the Booklet PWB and GND. Actuate the Booklet Staple Move Home Sensor. **The voltage changes.**

Y N

Replace the Booklet Staple Move Home Sensor (PL 23.18).

Replace the Booklet PWB (PL 23.21).

Alternately execute dC330 [013-028], Stapler Move Motor In and [013-029], Stapler Move Motor Out. **The Stapler Move Motor moves.**

Y N

Check the wires between P/J8992 pins 1~6 on the Booklet PWB and P/J8906 on the Booklet Stapler Move Motor for an open or short circuit, or loose or damaged connectors. **The wires are OK.**

Y N

Repair/replace as required.

Monitor the voltage at P/J8994, pin 3. Alternately execute dC330 [013-028], Stapler Move Motor In and [013-029], Stapler Move Motor Out. **An AC clock pulse is detected.**

Y N

Check the wire between P/J8994, pin 3 and P/J8995 pin 4. If the wire is OK, replace the Finisher PWB (PL 23.16).

Replace the Booklet Stapler Move Motor (PL 23.18). If the problem persists, replace the Booklet PWB (PL 23.21).

Go to **BSD 12.17 Office Finisher LX Booklet Staple Positioning** and check for an intermittent circuit.

313-212 (LX) Booklet Staple Move Position Sensor On Fail

BSD-ON:BSD 12.17 Office Finisher LX Booklet Staple Positioning

Booklet Staple Move Position Sensor does not turn on within designated time period

Initial Actions

- Ensure the Staple Head is free from obstructions
- Check for 313-306 or 313-307 Faults.

Procedure

Execute dC330 [013-144], Booklet Staple Move Position Sensor. Move the Booklet Stapler to block and unblock the sensor (PL 23.18). **The display changes.**

Y N

Check the wire between J8898 pin 2 and P/J8991 pin 5; and the wire between P/J8994, pin 5 and P/J8995 pin 5 for an open or short circuit, or a loose or damaged connector. **The wires are OK.**

Y N

Repair/reconnect as required.

Measure the voltage between P/J8991, pins 6 and 4 on the Booklet PWB. **The voltage is approx. +5VDC.**

Y N

Replace the Booklet PWB (PL 23.21).

Measure the voltage between P/J8991 pin 5 on the Booklet PWB and GND. Actuate the Booklet Staple Move Position Sensor. **The voltage changes.**

Y N

Replace the Booklet Staple Move Position Sensor (PL 23.18).

Measure the voltage between P8985 pin 5 on the Finisher PWB and GND. Actuate the Booklet Staple Move Position Sensor. **The voltage changes.**

Y N

Replace the Booklet PWB (PL 23.21). If the problem persists, replace the Finisher PWB (PL 23.16).

Replace the Finisher PWB (PL 23.16).

Alternately execute dC330 [013-028], Stapler Move Motor In and [013-029], Stapler Move Motor Out. **The Stapler Move Motor moves.**

Y N

Check the wires between P/J8992 pins 1~6 on the Booklet PWB and P/J8906 on the Booklet Stapler Move Motor for an open or short circuit, or loose or damaged connectors. **The wires are OK.**

Y N

Repair/replace as required.

Monitor the voltage at P/J8994, pin 3. Alternately execute dC330 [013-028], Stapler Move Motor In and [013-029], Stapler Move Motor Out. **An AC clock pulse is detected.**

A

Y N

Check the wire between P/J8994, pin 3 and P/J8995 pin 4. If the wire is OK, replace the Finisher PWB (PL 23.16).

Replace the Booklet Stapler Move Motor (PL 23.18). If the problem persists, replace the Booklet PWB (PL 23.21).

Go to **BSD 12.17 Office Finisher LX Booklet Staple Positioning** and check for an intermittent circuit.

A

313-213 (LX) Booklet Staple Move Position Sensor Off Fail

BSD-ON:BSD 12.17 Office Finisher LX Booklet Staple Positioning

Booklet Staple Move Position Sensor does not turn off within designated time period

Initial Actions

- Ensure the Staple Head is free from obstructions
- Check for 313-306 or 313-307 Faults.

Procedure

Execute dC330 [013-144], Booklet Staple Move Position Sensor. Move the Booklet Stapler to block and unblock the sensor (PL 23.18). **The display changes.**

Y N

Check the wire between J8898 pin 2 and P/J8991 pin 5; and the wire between P/J8994, pin 5 and P8985 pin 5 for an open or short circuit, or a loose or damaged connector. **The wires are OK.**

Y N

Repair/reconnect as required.

Measure the voltage between P/J8991, pins 6 and 4 on the Booklet PWB. **The voltage is approx. +5VDC.**

Y N

Replace the Booklet PWB (PL 23.21).

Measure the voltage between P/J8991 pin 5 on the Booklet PWB and GND. Actuate the Booklet Staple Move Position Sensor. **The voltage changes.**

Y N

Replace the Booklet Staple Move Position Sensor (PL 23.18).

Measure the voltage between P8985 pin 5 on the Finisher PWB and GND. Actuate the Booklet Staple Move Position Sensor. **The voltage changes.**

Y N

Replace the Booklet PWB (PL 23.21). If the problem persists, replace the Finisher PWB (PL 23.16).

Replace the Finisher PWB (PL 23.16).

Alternately execute dC330 [013-028], Stapler Move Motor In and [013-029], Stapler Move Motor Out. **The Stapler Move Motor moves.**

Y N

Check the wires between P/J8992 pins 1~6 on the Booklet PWB and P/J8906 on the Booklet Stapler Move Motor for an open or short circuit, or loose or damaged connectors. **The wires are OK.**

Y N

Repair/replace as required.

Monitor the voltage at P/J8994, pin 3. Alternately execute dC330 [013-028], Stapler Move Motor In and [013-029], Stapler Move Motor Out. **An AC clock pulse is detected.**

A

Y N

Check the wire between P/J8994, pin 3 and P8985 pin 4. If the wire is OK, replace the Finisher PWB (PL 23.16).

Replace the Booklet Stapler Move Motor (PL 23.18). If the problem persists, replace the Booklet PWB (PL 23.21).

Go to **BSD 12.17 Office Finisher LX Booklet Staple Positioning** and check for an intermittent circuit.

313-220 (LX) Booklet Creaser Detect Fail

BSD-ON:BSD 12.9 Office Finisher LX Folding

Control logic cannot detect the Creaser Assembly.

Procedure

Execute dC330 [013-160], Creaser Detected. **The display is 'Low.'**

Y N

There is less than 1 VDC at P/J8990 pin 4.

Y N

Check the wires between P/J8990 pins 4 and 5. Make sure that P8903 is securely fastened.

Replace the Finisher PWB (PL 23.16).

Go to **BSD 12.9 Office Finisher LX Folding** and check for an intermittent circuit.

313-306 (LX) Booklet Safety Switches Open

BSD-ON:BSD 12.5 Office Finisher LX Booklet Interlock Switching

Control logic senses that one or more Booklet Safety Switch is open.

NOTE: *The chain/link fault code for this RAP is an internal machine code and is never displayed or logged in Fault Code History. Use this RAP to troubleshoot persistent machine status conditions that cannot be cleared by performing the indicated process (e.g., loading paper, closing a cover, replacing a CRU, etc). Entry to this RAP is usually via the Machine Status Faults RAP located in the Other Faults section, or a chain/link listing on a BSD.*

Initial Actions

Check for 313-307 Faults.

Procedure

There is +24 VDC between P/J8993 pin 3 on the Booklet PWB and GND.

Y N

There is +24 VDC between P/J8993 pin 6 on the Booklet PWB and GND.

Y N

Go to the 313-307 (LX) RAP

GO to **BSD 12.5 Office Finisher LX Booklet Interlock Switching** and check the circuit through the Booklet Safety Switches (PL 23.21).

Replace the Booklet PWB (PL 23.21).

313-307 (LX) Booklet Cover Open

BSD-ON:BSD 12.5 Office Finisher LX Booklet Interlock Switching

Control logic senses that the Booklet Cover is open.

NOTE: *The chain/link fault code for this RAP is an internal machine code and is never displayed or logged in Fault Code History. Use this RAP to troubleshoot persistent machine status conditions that cannot be cleared by performing the indicated process (e.g., loading paper, closing a cover, replacing a CRU, etc). Entry to this RAP is usually via the Machine Status Faults RAP located in the Other Faults section, or a chain/link listing on a BSD.*

Initial Actions

Ensure the Cover is closed

Procedure

There is +24 VDC between P/J8993 pin 5 on the Booklet PWB and GND.

Y **N**

GO to **BSD 12.5 Office Finisher LX Booklet Interlock Switching**and check the circuit from P/J8993 to and from J8899 on the Booklet Stapler Cover Switch (PL 23.21).

Replace the Booklet PWB (PL 23.21).

316-XXX Controller Faults Entry - TBD

Table 1 is unchanged from Nwd. Verify the table against the Javelin Faults SBC list. NOTE - there are nearly 1000 chain 16 faults listed in SBC fault code listing.

Procedure

Find the Fault Code in Table 1 . Go to the RAP listed for that Fault Code. Fault Code extensions are defined in Table 2 .

Table 1 Chain 16 Fault Codes

Chain	Link	Ext	Fault Name	Fault Cause	RAP
316	000	09	Cannot create RPC connection with ENS	RPC corrupted or O/S service failure or ENS died	316-1
316	000	14	Cannot create RPC connection with ENS	RPC corrupted or O/S service failure or ENS died	316-1
316	000	19	Unable to Create RPC Connection with ENS	RPC corrupted or O/S service failure or ENS died	316-1
316	000	26	Cannot Create RPC Connection with ENS	RPC corrupted or O/S service failure or ENS died	316-1
316	001	09	Unable to do startup synchronization	IPC failure or SC not responding	316-1
316	001	14	Unable to do startup synchronization	IPC failure or SC not responding	316-1
316	001	19	Unable to do start up synchronization	IPC failure or SC not responding	316-1
316	001	26	Unable to Start up and Sync with SC	IPC failure or SC not responding	316-1
316	001	47	Unable to do Start Up Synchronization	IPC failure or SC not responding	316-1
316	002	09	Unable to register as RPC server	Corrupt RPC or corrupt system configuration or O/S service failure	316-1
316	002	14	Unable to register as RPC server	Corrupt RPC or corrupt system configuration or O/S service failure	316-1
316	002	19	Unable to Register as an RPC Server	Corrupt RPC or corrupt system configuration or O/S service failure	316-1
316	002	26	Could not become an RPC Server	Corrupt O/S RPC Table	316-1
316	003	09	Too many IPC Handles	Too many existing IPC handlers in IPC handler table	316-1
316	003	14	Too many IPC Handles	Too many existing IPC handlers in IPC handler table	316-1
316	003	19	Too many IPC Handlers	Too many existing IPC handles in IPC handler table	316-1

Table 1 Chain 16 Fault Codes

Chain	Link	Ext	Fault Name	Fault Cause	RAP
316	003	90	Utility Insert Handler Failure	Too Many IPC Handlers in IPC Handler Table	316-1
316	004	09	Database Error known by Service Registry		316-2
316	004	14	RPC call failure to SBC registration service	Registration Service failed	316-1
316	004	19	RPC Connect Failure to SBC Registration Service	Registration Service Failed.	316-1
316	004	26	RPC Connect Failure to SBC Registration Service	RPC Communication Problem; Registration Service Failed	316-1
316	005	14	RPC call failure to SBC registration service	Registration service failed to respond in time	316-1
316	005	19	RPC Call Failure to SBC Registration Service	Registration Service Failed to Respond in Time	316-1
316	005	26	RPC Call Failure to SBC Registration Service	Registration Service failed to respond in time.	316-1
316	005	46	RPC Call Failure to SBC Registration Service (to register with)	Registration Service Failed to Respond in Time (null returned)	316-1
316	005	90	RPC call to SBC Registration failed	Registration Service failed to respond. SW error.	316-1
316	005	92	RPC Call Failure to SBC Registration Service (to register with)	Registration Service Failed to Respond in Time (null returned)	316-1
316	006	09	Cannot register for events	Event Notification Service unable to process request; ENS died	316-1
316	006	19	Cannot register for events	Event Notification Service unable to process request; ENS died	316-1
316	007	92	Invalid RPC Data Received	Unable to register; Can't open IPC queue; SW Error; O/S Failure; Driver Failure	316-1
316	009	09	Invalid IPC Data Received	SW Error; Corrupt Disk; Bad Memory	316-1
316	010	14	Unable to send IPC	Service being communicated to is dead; Queue is full; No Queue; System Resource Corrupted	316-1
316	013	14	Digital Copier ENS synchronization error	System RPC info corrupt or DC ENS dead	316-1
316	014	14	Digital Copier ENS registration error	System RPC info corrupt or DC ENS dead	316-1

Table 1 Chain 16 Fault Codes

Chain	Link	Ext	Fault Name	Fault Cause	RAP
316	015	14	SSBC data store environmental variable not set	Corrupt environment variable or configuration script error	316-1
316	015	19	SSBC data store environmental variable not set	Corrupt environment variable or configuration script error	316-1
316	016	14	Data Store init. failed	SSBC Faults 206, 207 or Data store not created or corrupt environment variable	316-1
316	016	19	Data Store init. failed	SSBC Faults 206, 207 or Data store not created or corrupt environment variable	316-1
316	016	99	IPC open, create, signal queue failed	Service is unable to open, create, or signal IPC queue.	316-2
316	017	19	Send Event Failure Unable to send event to SBC ENS	Invalid event info or data, ENS failure, System RPC info corrupt	316-1
316	021	19	SBC PM Registration Connect Error	LynxOS failure of system call gethostname	316-1
316	021	26	Service could not get Host Name	Service could not get Host Name	316-1
316	021	46	Unable to Get Host Name	SW error.	316-1
316	023	09	RPC Call Failure to ENS	ENS Service Failed to Respond in Time	316-1
316	023	26	RPC Call Failure to ENS	ENS Service Failed to Respond in Time	316-1
316	026	09	Memory allocation failure	SW Error, system resource failure	316-1
316	026	14	MALLOC error	Memory Leak, SW Bug, Memory Corrupt, Virtual Memory Exhausted, process Size Exceeding System Limits	316-1
316	026	46	Memory Allocation Error	Memory Leak, SW Bug, Memory Corrupt, Virtual Memory Exhausted, process Size Exceeding System Limits	316-1
316	026	90	Malloc Error	Memory Leak; SW Error; Virtual Memory Exhausted; process Size Exceeding System Limits	316-1

Table 1 Chain 16 Fault Codes

Chain	Link	Ext	Fault Name	Fault Cause	RAP
316	026	92	Memory Allocation Fault	Memory Leak; SW Bug; Memory Corrupt; Virtual Memory Exhausted; process Size Exceeding System Limits	316-1
316	027	90	Unable to obtain well known Queue ID	Invalid Queue Requested; No Range Environment Variable; Invalid Range Environment Variable	316-1
316	028	90	Invalid Range String	Range Environment Variable not set; Range Environment Variable set to Invalid Numeric String	316-1
316	030	19	Unable to Obtain Client RPC handle to EJS	RPC corrupted; O/S Service Failure; ENS died.	316-1
316	031	09	Invalid Event Notification Received	SW Error in the ENS Service or in the Service generating the Fault	316-1
316	032	19	NVM Connection Failure	Invalid System Config; SW Error; NVM Corrupted; NVM Non existent	316-1
316	039	00	Pthread Create Error	UNIX problem creating a thread; O/S Failure	316-1
316	040	92	Semaphore Fault	O/S error	316-1
316	048	09	Unable to set binding	SW Error IPC failure system resource exhaustion. Unable to set binding	316-1
316	048	14	Can not set SBC client binding	IPC failure. OS failure. Semaphore allocation failure.	316-1
316	048	90	Can not set SBC client binding	IPC failure. OS failure. Semaphore allocation failure.	316-1
316	150	09	Cannot send registration event	RPC corrupted or O/S service failure or ENS died. Cannot send registration event	316-1
316	150	14	Unable to obtain RPC transport	System RPC corrupt or invalid configuration	316-1
316	150	19	Unable to sync peer (within SBC) infrastructure services	Infrastructure service(s) died/ gone or clogged or s/w error. Infrastructure service died/ gone or clogged or s/w error	316-1
316	150	26	Fault Service Failed to Write to Log	Disk Write Error SW Error.	316-1
316	150	90	Invalid IPC Request Destination	SW Error	316-1
316	150	92	Consumer Interface Fault	Data Store failure	316-1

Table 1 Chain 16 Fault Codes

Chain	Link	Ext	Fault Name	Fault Cause	RAP
316	151	09	Invalid IPC command	Message corrupt	316-1
316	151	14	SNMP event registration failed	SC IPC Queue full Excessive 16-750-14 faults.	316-1
316	151	19	Invalid IPC command	Message corrupt	316-1
316	151	26	Fault Service Failed to get a Log Handle	SW Error.	316-1
316	151	90	Put Environment Variable Failure	Malloc Failure; SW Error; Virtual Memory Exhausted; process Size Exceeding Configuration System Limit.	316-1
316	152	09	Internal IPC failure	Software error; System resource exhaustion	316-1
316	152	14	Empty internal event received by ENS	S/W error.	316-1
316	152	19	Unable to send request to SSBC	SSBC System Control broken or too many IPC messages.	316-1
316	152	26	Fault Service could not open Fault Log	SW Error; Bad Disk. Fault Service could not open Fault Log	316-1
316	153	09	Unable to obtain IPC queue	File system corrupt or full or disk problem	316-1
316	153	19	NVM Save Failure	SW Error; Mother Board Failure	316-1
316	154	19	NVM Read Failure	SW Error; Mother Board Failure	316-1
316	155	19	SBC Faulted to Boot from Alternate Disk Partition	Corrupted SW; H/W Faults. File System Corrupted. SBC	316-1
316	156	19	ServiceRun loop failed.	Poll select failed.	316-1
316	160	09	SBC Registration Service process death	Software error (technically not possible)	316-1
316	161	09	Cannot send registration event	Software error.	316-1
316	162	09	SBC Platform Manager Service process death	Software error. Check fault log for more specific reasons.	316-1
316	163	09	SBC DM Agent Service process death	Software error.Check fault log for more specific reasons.	316-1
316	602	38	RPC Server Registration Failed	Corrupt O/S RPC Table	316-2
316	674	00	XSA RPC Server Death	RPC Server Not Responding	316-2
316	674	09	XSA RPC Server Death	RPC Server Not Responding	316-2
316	675	00	XSA Database Server Death	Database Server Not Responding	316-2

Table 1 Chain 16 Fault Codes

Chain	Link	Ext	Fault Name	Fault Cause	RAP
316	701	00	Unable to communicate with XSA database	LOA Failure	316-2
316	701	99	Unable to communicate with XSA database	LOA Failure.SW error, XSA database crash.	316-2
316	702	00	Unable to communicate with XSA database	LOA Failure	316-2
316	702	95	Unable to communicate with XSA database	LOA Failure	316-2
316	740	19	Error - SBC Hard Disk IIO Failure	Immediate image overwrite failed on SBC hard disk.	316-4
316	741	19	E5.0 ODIO Failure		316-4
316	751	00	Database Error known by Service Registry or registry not available.	S/W error.	316-2
316	752	00	SRS returns to Login Service “invalid fields, invalid data, or missing data”		316-2
316	752	07	Queue Service Library Initialization Failed	Data Store error; S/W error	316-1
316	752	14	Retry SSBC Sys Control event registration	SC Not Responding; SC IPC Queue Full; SC IPC Queue does not exist	316-2
316	752	95	File transfer operation failure	File transfer failure	316-2
316	753	00	No IPC Response	Login gets no response from SRS	316-2
316	754	00	Service Registry Bad data / Corrupted.		316-2
316	755	00	Service Registry cannot initialize database		316-2
316	760	09	Scan To File process death	Software error	316-3
316	760	47	Incorrect Checksum partition 1	Found incorrect checksum partition 1 during Software Verify check; Bad disk; bad s/w	316-2
316	761	09	LPD process death	Software error	316-3
316	761	68	Login gets no response from SRS	No IPC Response	316-2
316	762	09	Netware process death	Netware process failed. Software error	316-3
316	762	47	Missing File	Missing file found during Software Verify check; Disk access problem; Configuration problem	316-2
316	762	68	Service Registry Bad/Corrupted data		

Table 1 Chain 16 Fault Codes

Chain	Link	Ext	Fault Name	Fault Cause	RAP
316	763	09	NetBios process death	Software error	316-3
316	763	14	Reached internal limit for events	Reached internal limit for events	316-2
316	763	47	Invalid Permission	Invalid Permission found during Software Verify check	316-2
316	764	09	AppleTalk process death	Software error	316-3
316	765	09	Banyan Vines process death	Software error	316-3
316	766	09	Adobe process failure	Software error	316-3
316	767	09	HP PCL process death	Software error	316-3
316	767	19	Request to cancel spooling job error	Job Map Library unable to cancel job	316-2
316	768	09	Parallel process death	Software error	316-3
316	769	09	HTTP process death	Software error	316-3
316	770	09	Unexpected process death	Software error	316-3
316	771	09	Print Service EJS process death	Software error	316-2
316	772	09	SBC Print SPI process death	Software error	316-2
316	772	19	Failure to set SBC Platform Manager service state	Software error	316-2
316	772	46	TCP/IP status file error.	TCP/IP address already being used.	316-3
316	773	09	SBC Print Service Surrogate process death	Software error	316-2
316	774	09	SBC Protocol Module process death	Software error	316-2
316	776	09	SBC Fault Service process death	Software error	316-2
316	777	09	SBC Completed Job Log Service/SPI process death	Software error	316-2
316	778	09	SBC Configuration Utility process death	Software error	316-2
316	779	09	SBC Diagnostic Service process death	Software error	316-2
316	780	09	SBC Authentication SPI process death	Software error	316-2
316	781	09	SBC Counters Utility process death	Software error	316-2
316	782	09	SBC Configuration Synchronization process failure	Software error	316-2
316	785	09	SBC SNMP Agent process failure	Software error	316-3
316	786	09	Token Ring process death	Software error	316-3
316	787	09	Sub agent process death	Software error	316-3

Table 1 Chain 16 Fault Codes

Chain	Link	Ext	Fault Name	Fault Cause	RAP
316	788	09	Serial process death	Software error	316-3
316	789	09	Connectivity Configuration Server process death	Software error	316-3
316	789	46	Autonet status file error	Failed performing Autonet IP process	316-3
316	789	47	SSBC Apple test unknown error	SSBC Diagnostic failure.	316-3
316	790	09	Lan Fax process death	Software error	316-3
316	790	47	SSBC Banyan test unknown error	SSBC Diagnostic failure.	316-3
316	791	09	Accounting process death	Software error	316-2
316	792	09	Tiff process death	Software error	316-2
316	792	19	Lan Fax DLM is not defined.	Lan Fax DLM is not defined.	316-2
316	793	09	Port9100 process death	software error	316-2
316	793	19	Job Based Accounting DLM is not defined.	Job Based Accounting DLM is not defined.	316-2
316	795	09	Slpsa process death	software error	316-3
316	796	09	SSDP process death	Software error	316-3
316	797	09	USB process death	Software error	316-3
316	798	09	POP3 process death	Software error	316-3
316	799	09	SMTP process death	Software error	316-3
316	800	46	Ethernet Initialization failure	Unable to connect to device when setting up IP over Ethernet	316-3
316	801	46	Token Ring Initialization failure	Unable to connect to device when setting up IP over Token Ring	316-3
316	802	46	DHCP Initialization failure	Error occurred when attempting to get the IP data from the DHCP server.	316-3
316	803	46	RARP Initialization failure	Unable to get the IP address from the RARP server.	316-3
316	806	00	SSBC NetBIOS test memory allocation error	CPI Death Error	316-2
316	807	00	SSBC NetBIOS test memory allocation error	JobLog death Error	316-2
316	808	00	SSBC NetBIOS test memory allocation error	Job Tracker death Error	316-2
316	809	00	SSBC NetBIOS test memory allocation error	Kerberos Death Error	316-2
316	810	00	SSBC NetBIOS test memory allocation error	Scan to Distribution Death Error	316-2
316	811	00	SSBC NetBIOS test memory allocation error	SMB Death Error	316-2

Table 1 Chain 16 Fault Codes

Chain	Link	Ext	Fault Name	Fault Cause	RAP
316	812	00	SSBC NetBIOS test memory allocation error	TCP/IP Death Error	316-2
316	813	00	SSBC NetBIOS test memory allocation error	WS Scan Temp Death Error	316-2
316	814	00	SSBC NetBIOS test memory allocation error	Scan Compressor Death Error	316-2
316	815	09	Service Registry Process Death		316-2
316	934	19	Job Based Accounting not enough dc memory.	Job Based Accounting not enough dc memory.	316-2

Table 2 Fault Code Extensions

Extension number	Definition
00 - 07	Queue Utility Faults
09	SBC Registration Service Faults.
14	Event Notification Service Faults.
19	Platform Manager Faults.
26	Fault Log Service Faults
38	Completed Job Log Service Faults
46	Config Utility Faults
47	Diagnostic Service Faults
68	Net Auth Service Faults
90	
92	Internal Print Service Faults
95	Transfer Service Faults
99	

316-1

Initial Actions

Switch the power off, then on. If the problem is not resolved, continue with this procedure.

Procedure

Refer to the error log and try to determine under what situations the problem is occurring.

The problem is related to a specific job, client, or Page Description Language (PDL).

Y N

Reload the software (GP 9). **The problem remains.**

Y N

Switch the power off, then on. Return to Call Flow.

Replace the following, one at-a-time, until the problem is corrected:

- SBC Hard Disk & Hard Disk Cable.
- SBC DRAM SIMMS
- SBC PWB

The problem occurs on one particular job from one particular client.

Y N

The problem occurs on all jobs sent from one client.

Y N

The problem occurs with one job from any client.

Y N

Replace the following one at a time until the problem is corrected.

- SBC Hard Disk & Hard Disk Cable.
- SBC DRAM SIMMS.
- SBC PWB.

Another WC 7556F printer is available.

Y N

Escalate the service call.

The problem is repeatable on both printers.

Y N

Reload software on the problem machine. (GP 9). Ensure that the latest version is installed. If the problem continues, escalate the service call.

Inform Field Engineering that a Software Problem Action Report (SPAR) needs to be generated.

Ensure the following:

- Have the system administrator (SA) check the network configuration on the client (Compare to working client).
- Have the SA ensure that the client has the required resources.
- Have the system administrator reload the print driver on the client.
- If the problem continues, have the customer call the customer support center.

Reload the print driver on the affected workstation.

316-2

Non-Shutdown fault procedure

Initial Actions

For non-shutdown specified Network Controller faults, there need be no action taken. If the fault seems related to a customer complaint, perform the Procedure.

Procedure

Switch the power off, then on. If the problem continues, go to the 316-1.

316-3

This RAP addresses Network Controller faults related to network connectivity.

Procedure

Verify that the server or network with which you are trying to connect is operating. Go to the OF 16-1 Network Printing Problems Entry, Network Printing Problems Entry RAP. If the problem is not resolved, go to the 316-1.

316-4

This RAP troubleshoots Network Controller fault codes related to the Image Overwrite options.

Initial Actions

Print a Configuration Report (GP 6) and determine if Immediate Image Overwrite and/or On-Demand Overwrite options are enabled.

Procedure

If the configuration report shows Image Overwrite as installed/disabled:

- Enter the **Administrator Mode** (GP 2)
- Select the **Tools Tab**.
- Select **Security Settings**.
- Enable the required Feature.

If the problem continues, go to the 316-1.

319-300 Unable to Read or Write to Image Disk

Unable to read or write data from the Image Disk

Procedure

Switch power off then on. **The problem continues.**

Y **N**

Return to service call procedures.

Perform the following:

- Check the connections of the power harness and the red SATA data cable from the Disk Drive (PL 35.2) to the SBC PWB. Check for damage. Repair as required.
- If no problems are found, replace the Disk Drive (PL 35.2). Perform GP 9 Software Upgrade. If the problem continues, replace the SBC PWB (PL 35.2).

319-301 Unable to Write to Image Disk

Unable to write data to the Image Disk

Procedure

Switch power off then on. **The problem continues.**

Y **N**

Return to service call procedures.

Perform the following:

- Check the connections of the power harness and the red SATA data cable from the Disk Drive (PL 35.2) to the SBC PWB. Check for damage. Repair as required.
- If no problems are found, replace the Disk Drive (PL 35.2). Perform GP 9 Software Upgrade. If the problem continues, replace the SBC PWB (PL 35.2).

319-302 Bad Data Received from Image DIsk

Bad Data received from the Disk (i.e. disk returns data other than a read or write operation in response to a read or write request from)

Procedure

Switch power off then on. **The problem continues.**

Y **N**

Return to service call procedures.

Perform the following:

- Check the connections of the power harness and the red SATA data cable from the Disk Drive (PL 35.2) to the SBC PWB. Check for damage. Repair as required.
- If no problems are found, replace the Disk Drive (PL 35.2). Perform GP 9 Software Upgrade. If the problem continues, replace the SBC PWB (PL 35.2).

319-303 Unable to Format Image Disk

Unable to Format the Image Disk

Procedure

Switch power off then on. **The problem continues.**

Y **N**

Return to service call procedures.

Perform the following:

- Check the connections of the power harness and the red SATA data cable from the Disk Drive (PL 35.2) to the SBC PWB. Check for damage. Repair as required.
- If no problems are found, replace the Disk Drive (PL 35.2). Perform GP 9 Software Upgrade. If the problem continues, replace the SBC PWB (PL 35.2).

319-310 System Disk No Capacity Information at Power Up

System Disk does not return capacity information during Power Up.

Procedure

Switch power off then on. **The problem continues.**

Y **N**

Return to service call procedures.

Perform the following:

- Check the connections of the power harness and the red SATA data cable from the Disk Drive (PL 35.2) to the SBC PWB. Check for damage. Repair as required.
- If no problems are found, replace the Disk Drive (PL 35.2). Perform GP 9 Software Upgrade. If the problem continues, replace the SBC PWB (PL 35.2).

319-401 Out of Memory Caused By Stress Document

Out of Memory caused by a Stress Document

Procedure

No action is required. If 319-401 remains for more than 5 minutes, switch power off then on. If the problem continues, reload software using GP 9.

319-402 Out of Memory Caused by Stress Job

Out of Memory caused by a Stress Job

Procedure

No action is required. If the fault remains for more than 5 minutes, switch power off then on. If the problem continues, go to GP 9 and perform the Regular AltBoot procedure.

319-403 Out of Memory With More Than 1 Job in EPC

Out of Memory with greater than one job in EPC

Procedure

Rescan job. If the problem continues, rescan job according to EPC capabilities.

319-404 Video Compressor DVMA Timeout

Video Compressor DVMA Timeout

Procedure

Rescan the job.

319-405 Video Compressor DVMA Timeout

Video Decompressor DVMA Timeout

Procedure

Rescan the job.

319-406 Video Loopback DVMA Timeout

Video Loopback DVMA Timeout

Procedure

Rescan the job.

319-409 Job Integrity Cannot be Gauranteed

Video determines that it cannot guarantee the integrity of the job being processed.

Procedure

Reconcile completed jobs with uncompleted jobs. Switch the power off then on. Rerun uncompleted jobs.

319-410-00 Mark Output Timeout

Mark Output Timeout. Incomplete image data transfer within the prescribed period. Machine will attempt to recover (may take more then 30 sec.).

Procedure

If the job does not recover, switch the power off/on and rerun the job. If the problem continues, go to GP 9 and perform the Regular AltBoot procedure.

If Smears, Streaks, Lines, or Color Misregistration occur when using DADF only, and/or DADF jobs appear to make the engine pause longer than normal before starting, reseat or replace the EPC Memory on the SBC PWB (PL 35.2).

If copying from the platen and job is deleted when the fault occurs, the NVM may be corrupt.

1. Enter Diagnostics dC301.
2. Select [Copier] (left), [Scanner] (center), [All] (right).
3. Select [Initialize] and exit Diagnostics.
4. Switch the power off, then on.

319-410-01 Mark Output Timeout

Mark Output Timeout. Incomplete image data transfer within the prescribed period. Job has been deleted.

Procedure

Switch the power off/on and rerun the job. If the problem continues, go to GP 9 and perform the Regular AltBoot procedure.

If Smears, Streaks, Lines, or Color Misregistration occur when using DADF only, and/or DADF jobs appear to make the engine pause longer than normal before starting, reseat or replace the EPC Memory on the SBC PWB (PL 35.2).

If copying from the platen and job is deleted when the fault occurs, the NVM may be corrupt.

1. Enter Diagnostics dC301.
2. Select [Copier] (left), [Scanner] (center), [All] (right).
3. Select [Initialize] and exit Diagnostics.
4. Switch the power off, then on.

319-410-2 Compress Image Timeout

Compress Image timeout. Incomplete image data transfer within the prescribed period. Job has been deleted.

Procedure

Switch the power off/on and rerun the job. If the problem continues, go to GP 9 and perform the Regular AltBoot procedure. If the problem continues, replace the EPC memory (PL 35.2) in the SBC.

If Smears, Streaks, Lines, or Color Misregistration occur when using DADF only, and/or DADF jobs appear to make the engine pause longer than normal before starting, reseat or replace the EPC Memory on the SBC PWB (PL 35.2).

If copying from the platen and job is deleted when the fault occurs, the NVM may be corrupt.

1. Enter Diagnostics dC301.
2. Select [Copier] (left), [Scanner] (center), [All] (right).
3. Select [Initialize] and exit Diagnostics.
4. Switch the power off, then on.

319-410-3 Decompress Image Timeout

Decompress Image timeout. Incomplete image data transfer within the prescribed period. Job has been deleted.

Procedure

Switch the power off/on and rerun the job. If the problem continues, go to GP 9 and perform the Regular AltBoot procedure.

If Smears, Streaks, Lines, or Color Misregistration occur when using DADF only, and/or DADF jobs appear to make the engine pause longer than normal before starting, reseat or replace the EPC Memory on the SBC PWB (PL 35.2).

If copying from the platen and job is deleted when the fault occurs, the NVM may be corrupt.

1. Enter Diagnostics dC301.
2. Select [Copier] (left), [Scanner] (center), [All] (right).
3. Select [Initialize] and exit Diagnostics.
4. Switch the power off, then on.

319-410-4 Merge Image Timeout

Merge Image timeout. Incomplete image data transfer within the prescribed period. Job has been deleted.

Procedure

Switch the power off/on and rerun the job. If the problem continues, go to GP 9 and perform the Regular AltBoot procedure.

If Smears, Streaks, Lines, or Color Misregistration occur when using DADF only, and/or DADF jobs appear to make the engine pause longer than normal before starting, reseat or replace the EPC Memory on the SBC PWB (PL 35.2).

If copying from the platen and job is deleted when the fault occurs, the NVM may be corrupt.

1. Enter Diagnostics dC301.
2. Select [Copier] (left), [Scanner] (center), [All] (right).
3. Select [Initialize] and exit Diagnostics.
4. Switch the power off, then on.

319-410-5 Rotate Image Timeout

Rotate Image timeout. Incomplete image data transfer within the prescribed period. Job has been deleted.

Procedure

Switch the power off/on and rerun the job. If the problem continues, go to GP 9 and perform the Regular AltBoot procedure.

If Smears, Streaks, Lines, or Color Misregistration occur when using DADF only, and/or DADF jobs appear to make the engine pause longer than normal before starting, reseat or replace the EPC Memory on the SBC PWB (PL 35.2).

If copying from the platen and job is deleted when the fault occurs, the NVM may be corrupt.

1. Enter Diagnostics dC301.
2. Select [Copier] (left), [Scanner] (center), [All] (right).
3. Select [Initialize] and exit Diagnostics.
4. Switch the power off, then on.

319-410-6 Network Input Failure

Network Input Failure. Incomplete image data transfer. Job has been deleted.

Procedure

Switch the power off/on and rerun the job. If the problem continues, go to GP 9 and perform the Regular AltBoot procedure.

If Smears, Streaks, Lines, or Color Misregistration occur when using DADF only, and/or DADF jobs appear to make the engine pause longer than normal before starting, reseat or replace the EPC Memory on the SBC PWB (PL 35.2).

If copying from the platen and job is deleted when the fault occurs, the NVM may be corrupt.

1. Enter Diagnostics dC301.
2. Select [Copier] (left), [Scanner] (center), [All] (right).
3. Select [Initialize] and exit Diagnostics.
4. Switch the power off, then on.

319-410-7 E-Fax Send/Receive Failure

E-Fax Send/Receive Failure. Incomplete image data transfer. Job has been deleted.

Procedure

Switch the power off/on and rerun the job. If the problem continues, go to GP 9 and perform the Regular AltBoot procedure.

If Smears, Streaks, Lines, or Color Misregistration occur when using DADF only, and/or DADF jobs appear to make the engine pause longer than normal before starting, reseat or replace the EPC Memory on the SBC PWB (PL 35.2).

If copying from the platen and job is deleted when the fault occurs, the NVM may be corrupt.

1. Enter Diagnostics dC301.
2. Select [Copier] (left), [Scanner] (center), [All] (right).
3. Select [Initialize] and exit Diagnostics.
4. Switch the power off, then on.

319-410-8 Scan Input Failure

Scan Input Failure. Incomplete image data transfer. Job has been deleted.

Procedure

Switch the power off/on and rerun the job. If the problem continues, go to GP 9 and perform the Regular AltBoot procedure.

If Smears, Streaks, Lines, or Color Misregistration occur when using DADF only, and/or DADF jobs appear to make the engine pause longer than normal before starting, reseat or replace the EPC Memory on the SBC PWB (PL 35.2).

If there is a black background, but the prints are good, replace the IIT PWB (Switch the EEPROM) (PL 1.6), and check the values of NVM 715-050 through 715-099 against the factory sheet.

If copying from the platen and job is deleted when the fault occurs, the NVM may be corrupt.

1. Enter Diagnostics dC301.
2. Select [Copier] (left), [Scanner] (center), [All] (right).
3. Select [Initialize] and exit Diagnostics.
4. Switch the power off, then on.

319-410-9 Byte Count Error

Byte Count Error. Incomplete image data transfer. Job has been deleted.

Procedure

Switch the power off/on and rerun the job. If the problem continues, go to GP 9 and perform the Regular AltBoot procedure.

If Smears, Streaks, Lines, or Color Misregistration occur when using DADF only, and/or DADF jobs appear to make the engine pause longer than normal before starting, reseat or replace the EPC Memory on the SBC PWB (PL 35.2).

If copying from the platen and job is deleted when the fault occurs, the NVM may be corrupt.

1. Enter Diagnostics dC301.
2. Select [Copier] (left), [Scanner] (center), [All] (right).
3. Select [Initialize] and exit Diagnostics.
4. Switch the power off, then on.

319-410-10 Setup Too Late

Set Up Too Late. Incomplete image data transfer. Job has been deleted.

Procedure

Switch the power off/on and rerun the job. If the problem continues, go to GP 9 and perform the Regular AltBoot procedure.

If Smears, Streaks, Lines, or Color Misregistration occur when using DADF only, and/or DADF jobs appear to make the engine pause longer than normal before starting, reseat or replace the EPC Memory on the SBC PWB (PL 35.2).

If copying from the platen and job is deleted when the fault occurs, the NVM may be corrupt.

1. Enter Diagnostics dC301.
2. Select [Copier] (left), [Scanner] (center), [All] (right).
3. Select [Initialize] and exit Diagnostics.
4. Switch the power off, then on.

319-410-11 DMA Master Abort

DMA Master Abort. Incomplete image data transfer. Job has been deleted.

Procedure

Switch the power off/on and rerun the job. If the problem continues, go to GP 9 and perform the Regular AltBoot procedure.

If Smears, Streaks, Lines, or Color Misregistration occur when using DADF only, and/or DADF jobs appear to make the engine pause longer than normal before starting, reseat or replace the EPC Memory on the SBC PWB (PL 35.2).

If copying from the platen and job is deleted when the fault occurs, the NVM may be corrupt.

1. Enter Diagnostics dC301.
2. Select [Copier] (left), [Scanner] (center), [All] (right).
3. Select [Initialize] and exit Diagnostics.
4. Switch the power off, then on.

319-410-12 Huffman Error

Huffman Error. Incomplete image data transfer. Job has been deleted.

Procedure

Switch the power off/on and rerun the job. If the problem continues, go to GP 9 and perform the Regular AltBoot procedure.

If Smears, Streaks, Lines, or Color Misregistration occur when using DADF only, and/or DADF jobs appear to make the engine pause longer than normal before starting, reseat or replace the EPC Memory on the SBC PWB (PL 35.2).

If copying from the platen and job is deleted when the fault occurs, the NVM may be corrupt.

1. Enter Diagnostics dC301.
2. Select [Copier] (left), [Scanner] (center), [All] (right).
3. Select [Initialize] and exit Diagnostics.
4. Switch the power off, then on.

319-410-13 EOR Error

EOR Error. Incomplete image data transfer. Job has been deleted.

Procedure

Switch the power off/on and rerun the job. If the problem continues, go to GP 9 and perform the Regular AltBoot procedure.

If Smears, Streaks, Lines, or Color Misregistration occur when using DADF only, and/or DADF jobs appear to make the engine pause longer than normal before starting, reseat or replace the EPC Memory on the SBC PWB (PL 35.2).

If copying from the platen and job is deleted when the fault occurs, the NVM may be corrupt.

1. Enter Diagnostics dC301.
2. Select [Copier] (left), [Scanner] (center), [All] (right).
3. Select [Initialize] and exit Diagnostics.
4. Switch the power off, then on.

319-750 EPC Memory Size Changed Configuration at Power Up

The System detects that the EPC Memory Size configuration has changed during the Power On Sequence

Procedure

Rerun the job.

319-752 EPC Memory Size Changed Configuration at Power Up

The System detects that the EPC Memory Size configuration has changed during the Power On Sequence

Procedure

Switch machine off then on.

319-754 Image Disk Configuration Changed at Power Up

The System detects that the Image Disk Configuration (Present vs. Not Present) has changed during the Power On Sequence

Procedure

Check the DC power connector on the HDD. Switch machine off then on.

319-760 Test Patterns Missing From EPC

Test Patterns are missing from EPC

Procedure

Switch power off then on. **The problem continues.**

Y **N**

Return to service call procedures.

Go to GP 9 and perform the Regular AltBoot procedure.

320-302 Fax Unexpected Reset

BSD-ON:BSD 34.1 - FAX

Fax Card Hardware or Software error.

Initial Actions

Check that the Fax PWB is fully seated in the connector P/J2 on the Riser PWB.

Check that the customer phone lines are properly connected to the Fax PWB and are not damaged.

Procedure

Print a Configuration Sheet. **The Configuration Sheet indicates the Fax PWB is installed.**

Y N

Perform the following in order:

1. Check that the Fax IF Flex Cable from the Riser PWB P/J1 to the SBC PWB P/J23 is not damaged, that it is properly connected and that the connectors are not damaged
2. Go to the OF 17-1 FAX Entry RAP and check that the Fax settings are correct
3. Reload SW using GP 9.
4. Replace the Fax IF Flex Cable (PL 18.5).
5. Replace the Fax PWB (PL 18.5).
6. Replace the Hard Drive ([PL 35.2]).
7. Replace the SBC PWB (PL 35.2)

Check the following:

- Ensure the FAX is enabled
- Check that the Fax IF Flex Cable from the Riser PWB P/J1 to the SBC PWB P/J23 is not damaged, that it is properly connected and that the connectors are not damaged
- Go to the OF 17-1 FAX Entry RAP and check that the Fax settings are correct
- Reload SW using GP 9.
- Replace the Fax IF Flex Cable (PL 18.5).
- Replace the Fax PWB (PL 18.5).
- Replace the Hard Drive ([PL 35.2]).
- Replace the SBC PWB (PL 35.2)

320-303 Fax Basic Card Unrecoverable Fault

BSD-ON:BSD 34.1 - FAX

Fax Card Hardware or Software error.

Initial Actions

Check that the Fax PWB is fully seated in the connector P/J2 on the Riser PWB.

Check that the customer phone lines are properly connected to the Fax PWB and are not damaged.

Procedure

Print a Configuration Sheet. **The Configuration Sheet indicates the Fax PWB is installed.**

Y N

Perform the following in order:

1. Check that the Fax IF Flex Cable from the Riser PWB P/J1 to the SBC PWB P/J23 is not damaged, that it is properly connected and that the connectors are not damaged
2. Go to the OF 17-1 FAX Entry RAP and check that the Fax settings are correct
3. Reload SW using GP 9.
4. Replace the Fax IF Flex Cable (PL 18.5).
5. Replace the Fax PWB (PL 18.5).
6. Replace the Hard Drive ([PL 35.2]).
7. Replace the SBC PWB (PL 35.2)

Check the following:

- Ensure the FAX is enabled
- Check that the Fax IF Flex Cable from the Riser PWB P/J1 to the SBC PWB P/J23 is not damaged, that it is properly connected and that the connectors are not damaged
- Go to the OF 17-1 FAX Entry RAP and check that the Fax settings are correct
- Reload SW using GP 9.
- Replace the Fax IF Flex Cable (PL 18.5).
- Replace the Hard Drive ([PL 35.2]).
- Replace the Fax PWB (PL 18.5).
- Replace the SBC PWB (PL 35.2)

320-305 Fax System Low Memory Unrecoverable Fault

BSD-ON:BSD 34.1 - FAX

Fax Card Hardware or Software error.

Initial Actions

Check that the Fax PWB is fully seated in the connector P/J2 on the Riser PWB.

Check that the customer phone lines are properly connected to the Fax PWB and are not damaged.

Procedure

Print a Configuration Sheet. **The Configuration Sheet indicates the Fax PWB is installed.**

Y N

Perform the following in order:

1. Check that the Fax IF Flex Cable from the Riser PWB P/J1 to the SBC PWB P/J23 is not damaged, that it is properly connected and that the connectors are not damaged
2. Go to the OF 17-1 FAX Entry RAP and check that the Fax settings are correct
3. Reload SW using GP 9.
4. Replace the Fax IF Flex Cable (PL 18.5).
5. Replace the Fax PWB (PL 18.5).
6. Replace the Hard Drive ([PL 35.2]).
7. Replace the SBC PWB (PL 35.2)

Check the following:

- Ensure the FAX is enabled
- Check that the Fax IF Flex Cable from the Riser PWB P/J1 to the SBC PWB P/J23 is not damaged, that it is properly connected and that the connectors are not damaged
- Go to the OF 17-1 FAX Entry RAP and check that the Fax settings are correct
- Reload SW using GP 9.
- Replace the Fax IF Flex Cable (PL 18.5).
- Replace the Fax PWB (PL 18.5).
- Replace the Hard Drive ([PL 35.2]).
- Replace the SBC PWB (PL 35.2)

320-320 Fax Not Cleared By Reset

BSD-ON:BSD 34.1 - FAX

5 instances of an unrecoverable fax fault and has not been cleared by a card reset.

Initial Actions

Check that the Fax PWB is fully seated in the connector P/J2 on the Riser PWB.

Check that the customer phone lines are properly connected to the Fax PWB and are not damaged.

Procedure

Print a Configuration Sheet. **The Configuration Sheet indicates the Fax PWB is installed.**

Y N

Perform the following in order:

1. Check that the Fax IF Flex Cable from the Riser PWB P/J1 to the SBC PWB P/J23 is not damaged, that it is properly connected and that the connectors are not damaged
2. Go to the OF 17-1 FAX Entry RAP and check that the Fax settings are correct
3. Reload SW using GP 9.
4. Replace the Fax IF Flex Cable (PL 18.5).
5. Replace the Fax PWB (PL 18.5).
6. Replace the Hard Drive ([PL 35.2]).
7. Replace the SBC PWB (PL 35.2)

Check the following:

- Ensure the FAX is enabled
- Check that the Fax IF Flex Cable from the Riser PWB P/J1 to the SBC PWB P/J23 is not damaged, that it is properly connected and that the connectors are not damaged
- Go to the OF 17-1 FAX Entry RAP and check that the Fax settings are correct
- Reload SW using GP 9.
- Replace the Fax IF Flex Cable (PL 18.5).
- Replace the Fax PWB (PL 18.5).
- Replace the Hard Drive ([PL 35.2]).
- Replace the SBC PWB (PL 35.2)

320-322 Fax NV Device Not Present - TBD

BSD-ON:BSD 34.1 - FAX

Note to reviewer: What is “NV device” is this something CSE could replace, order, check to see if it’s seated or something?

NV device not fitted to basic fax card

Initial Actions

Check that the Fax PWB is fully seated in the connector P/J2 on the Riser PWB.

Check that the customer phone lines are properly connected to the Fax PWB and are not damaged.

Procedure

Print a Configuration Sheet. **The Configuration Sheet indicates the Fax PWB is installed.**

Y N

Perform the following in order:

1. Check that the Fax IF Flex Cable from the Riser PWB P/J1 to the SBC PWB P/J23 is not damaged, that it is properly connected and that the connectors are not damaged
2. Go to the OF 17-1 FAX Entry RAP and check that the Fax settings are correct
3. Reload SW using GP 9.
4. Replace the Fax IF Flex Cable (PL 18.5).
5. Replace the Fax PWB (PL 18.5).
6. Replace the Hard Drive ([PL 35.2]).
7. Replace the SBC PWB (PL 35.2)

Check the following:

- Ensure the FAX is enabled
- Check that the Fax IF Flex Cable from the Riser PWB P/J1 to the SBC PWB P/J23 is not damaged, that it is properly connected and that the connectors are not damaged
- Go to the OF 17-1 FAX Entry RAP and check that the Fax settings are correct
- Reload SW using GP 9.
- Replace the Fax IF Flex Cable (PL 18.5).
- Replace the Fax PWB (PL 18.5).
- Replace the Hard Drive ([PL 35.2]).
- Replace the SBC PWB (PL 35.2)

320-323 Fax System Low Memory Recoverable Fault - TBD

BSD-ON:BSD 34.1 - FAX

Note to reviewer: Should repair here include clearing memory and resending job as p/o initial actions?

Fax system memory is low. (<6MB)

Initial Actions

Check that the Fax PWB is fully seated in the connector P/J2 on the Riser PWB.

Check that the customer phone lines are properly connected to the Fax PWB and are not damaged.

Procedure

Print a Configuration Sheet. **The Configuration Sheet indicates the Fax PWB is installed.**

Y N

Perform the following in order:

1. Check that the Fax IF Flex Cable from the Riser PWB P/J1 to the SBC PWB P/J23 is not damaged, that it is properly connected and that the connectors are not damaged
2. Go to the OF 17-1 FAX Entry RAP and check that the Fax settings are correct
3. Reload SW using GP 9.
4. Replace the Fax IF Flex Cable (PL 18.5).
5. Replace the Fax PWB (PL 18.5).
6. Replace the Hard Drive ([PL 35.2]).
7. Replace the SBC PWB (PL 35.2)

Check the following:

- Ensure the FAX is enabled
- Check that the Fax IF Flex Cable from the Riser PWB P/J1 to the SBC PWB P/J23 is not damaged, that it is properly connected and that the connectors are not damaged
- Go to the OF 17-1 FAX Entry RAP and check that the Fax settings are correct
- Reload SW using GP 9.
- Replace the Fax IF Flex Cable (PL 18.5).
- Replace the Fax PWB (PL 18.5).
- Replace the Hard Drive ([PL 35.2]).
- Replace the SBC PWB (PL 35.2)

320-324 Fax Out Of File Memory - TBD

BSD-ON:BSD 34.1 - FAX

See Reviewer note for previous RAP

Not enough memory to use Fax Service

Initial Actions

Check that the Fax PWB is fully seated in the connector P/J2 on the Riser PWB.

Check that the customer phone lines are properly connected to the Fax PWB and are not damaged.

Procedure

Print a Configuration Sheet. **The Configuration Sheet indicates the Fax PWB is installed.**

Y N

Perform the following in order:

1. Check that the Fax IF Flex Cable from the Riser PWB P/J1 to the SBC PWB P/J23 is not damaged, that it is properly connected and that the connectors are not damaged
2. Go to the OF 17-1 FAX Entry RAP and check that the Fax settings are correct
3. Reload SW using GP 9.
4. Replace the Fax IF Flex Cable (PL 18.5).
5. Replace the Fax PWB (PL 18.5).
6. Replace the Hard Drive (PL 35.2)
7. Replace the SBC PWB (PL 35.2)

Check the following:

- Ensure the FAX is enabled
- Check that the Fax IF Flex Cable from the Riser PWB P/J1 to the SBC PWB P/J23 is not damaged, that it is properly connected and that the connectors are not damaged
- Go to the OF 17-1 FAX Entry RAP and check that the Fax settings are correct
- Reload SW using GP 9.
- Replace the Fax IF Flex Cable (PL 18.5).
- Replace the Fax PWB (PL 18.5).
- Replace the Hard Drive (PL 35.2)
- Replace the SBC PWB (PL 35.2)

320-327 Fax Extended Card Fault

BSD-ON:BSD 34.1 - FAX

Registers cannot be accessed on the Extended card

Initial Actions

Check that the Fax PWB is fully seated in the connector P/J2 on the Riser PWB.

Check that the customer phone lines are properly connected to the Fax PWB and are not damaged.

Procedure

Print a Configuration Sheet. **The Configuration Sheet indicates the Fax PWB is installed.**

Y N

Perform the following in order:

1. Check that the Fax IF Flex Cable from the Riser PWB P/J1 to the SBC PWB P/J23 is not damaged, that it is properly connected and that the connectors are not damaged
2. Go to the OF 17-1 FAX Entry RAP and check that the Fax settings are correct
3. Reload SW using GP 9.
4. Replace the Fax IF Flex Cable (PL 18.5).
5. Replace the Fax PWB (PL 18.5).
6. Replace the Hard Drive (PL 35.2)
7. Replace the SBC PWB (PL 35.2)

Check the following:

- Ensure the FAX is enabled
- Check that the Fax IF Flex Cable from the Riser PWB P/J1 to the SBC PWB P/J23 is not damaged, that it is properly connected and that the connectors are not damaged
- Go to the OF 17-1 FAX Entry RAP and check that the Fax settings are correct
- Reload SW using GP 9.
- Replace the Fax IF Flex Cable (PL 18.5).
- Replace the Fax PWB (PL 18.5).
- Replace the Hard Drive (PL 35.2)
- Replace the SBC PWB (PL 35.2)

320-331 Fax Network Line 1 Fault

BSD-ON:BSD 34.1 - FAX

No communication via PSTN1 port

Initial Actions

Check that the Fax PWB is fully seated in the connector P/J2 on the Riser PWB.

Check that the customer phone lines are properly connected to the Fax PWB and are not damaged.

Procedure

Print a Configuration Sheet. **The Configuration Sheet indicates the Fax PWB is installed.**

Y N

Perform the following in order:

1. Check that the Fax IF Flex Cable from the Riser PWB P/J1 to the SBC PWB P/J23 is not damaged, that it is properly connected and that the connectors are not damaged
2. Go to the OF 17-1 FAX Entry RAP and check that the Fax settings are correct
3. Reload SW using GP 9.
4. Replace the Fax IF Flex Cable (PL 18.5).
5. Replace the Fax PWB (PL 18.5).
6. Replace the Hard Drive (PL 35.2)
7. Replace the SBC PWB (PL 35.2)

Check the following:

- Ensure the FAX is enabled
- Check that the Fax IF Flex Cable from the Riser PWB P/J1 to the SBC PWB P/J23 is not damaged, that it is properly connected and that the connectors are not damaged
- Go to the OF 17-1 FAX Entry RAP and check that the Fax settings are correct
- Reload SW using GP 9.
- Replace the Fax IF Flex Cable (PL 18.5).
- Replace the Fax PWB (PL 18.5).
- Replace the Hard Drive (PL 35.2)
- Replace the SBC PWB (PL 35.2)

320-332 Fax Network Line 2 Fault

BSD-ON:BSD 34.1 - FAX

No communication via PSTN2 port

Initial Actions

Check that the Fax PWB is fully seated in the connector P/J2 on the Riser PWB.

Check that the customer phone lines are properly connected to the Fax PWB and are not damaged.

Procedure

Print a Configuration Sheet. **The Configuration Sheet indicates the Fax PWB is installed.**

Y N

Perform the following in order:

1. Check that the Fax IF Flex Cable from the Riser PWB P/J1 to the SBC PWB P/J23 is not damaged, that it is properly connected and that the connectors are not damaged
2. Go to the OF 17-1 FAX Entry RAP and check that the Fax settings are correct
3. Reload SW using GP 9.
4. Replace the Fax IF Flex Cable (PL 18.5).
5. Replace the Fax PWB (PL 18.5).
6. Replace the Hard Drive (PL 35.2)
7. Replace the SBC PWB (PL 35.2)

Check the following:

- Ensure the FAX is enabled
- Check that the Fax IF Flex Cable from the Riser PWB P/J1 to the SBC PWB P/J23 is not damaged, that it is properly connected and that the connectors are not damaged
- Go to the OF 17-1 FAX Entry RAP and check that the Fax settings are correct
- Reload SW using GP 9.
- Replace the Fax IF Flex Cable (PL 18.5).
- Replace the Fax PWB (PL 18.5).
- Replace the Hard Drive (PL 35.2)
- Replace the SBC PWB (PL 35.2)

320-338 Fax Communication Failure at POST

Fax communication error at power up or re-boot; power on self test (POST) failure.

Procedure

Power the machine off and on. If the problem continues, go to OF 3.3 Power On Self Test RAP or OF 17-1 FAX Entry as appropriate.

320-339 Internal Fax Card Fault

BSD-ON:BSD 34.1 - FAX

Basic Card problem

Initial Actions

Check that the Fax PWB is fully seated in the connector P/J2 on the Riser PWB.

Check that the customer phone lines are properly connected to the Fax PWB and are not damaged.

Procedure

Print a Configuration Sheet. **The Configuration Sheet indicates the Fax PWB is installed.**

Y N

Perform the following in order:

1. Check that the Fax IF Flex Cable from the Riser PWB P/J1 to the SBC PWB P/J23 is not damaged, that it is properly connected and that the connectors are not damaged
2. Go to the OF 17-1 FAX Entry RAP and check that the Fax settings are correct
3. Reload SW using GP 9.
4. Replace the Fax IF Flex Cable (PL 18.5).
5. Replace the Fax PWB (PL 18.5).
6. Replace the Hard Drive (PL 35.2)
7. Replace the SBC PWB (PL 35.2)

Check the following:

- Ensure the FAX is enabled
- Check that the Fax IF Flex Cable from the Riser PWB P/J1 to the SBC PWB P/J23 is not damaged, that it is properly connected and that the connectors are not damaged
- Go to the OF 17-1 FAX Entry RAP and check that the Fax settings are correct
- Reload SW using GP 9.
- Replace the Fax IF Flex Cable (PL 18.5).
- Replace the Fax PWB (PL 18.5).
- Replace the Hard Drive (PL 35.2)
- Replace the SBC PWB (PL 35.2)

320-340 Fax Port 2 Modem Failure

BSD-ON:BSD 34.1 - FAX

Extended Card Problem

Initial Actions

Check that the Fax PWB is fully seated in the connector P/J2 on the Riser PWB.

Check that the customer phone lines are properly connected to the Fax PWB and are not damaged.

Procedure

Print a Configuration Sheet. **The Configuration Sheet indicates the Fax PWB is installed.**

Y N

Perform the following in order:

1. Check that the Fax IF Flex Cable from the Riser PWB P/J1 to the SBC PWB P/J23 is not damaged, that it is properly connected and that the connectors are not damaged
2. Go to the OF 17-1 FAX Entry RAP and check that the Fax settings are correct
3. Reload SW using GP 9.
4. Replace the Fax IF Flex Cable (PL 18.5).
5. Replace the Fax PWB (PL 18.5).
6. Replace the Hard Drive (PL 35.2)
7. Replace the SBC PWB (PL 35.2)

Check the following:

- Ensure the FAX is enabled
- Check that the Fax IF Flex Cable from the Riser PWB P/J1 to the SBC PWB P/J23 is not damaged, that it is properly connected and that the connectors are not damaged
- Go to the OF 17-1 FAX Entry RAP and check that the Fax settings are correct
- Reload SW using GP 9.
- Replace the Fax IF Flex Cable (PL 18.5).
- Replace the Fax PWB (PL 18.5).
- Replace the Hard Drive (PL 35.2)
- Replace the SBC PWB (PL 35.2)

320-341 Fax Basic Card Failed Fault

BSD-ON:BSD 34.1 - FAX

Miscellaneous Basic Card problems

Initial Actions

Check that the Fax PWB is fully seated in the connector P/J2 on the Riser PWB.

Check that the customer phone lines are properly connected to the Fax PWB and are not damaged.

Procedure

Print a Configuration Sheet. **The Configuration Sheet indicates the Fax PWB is installed.**

Y N

Perform the following in order:

1. Check that the Fax IF Flex Cable from the Riser PWB P/J1 to the SBC PWB P/J23 is not damaged, that it is properly connected and that the connectors are not damaged
2. Go to the OF 17-1 FAX Entry RAP and check that the Fax settings are correct
3. Reload SW using GP 9.
4. Replace the Fax IF Flex Cable (PL 18.5).
5. Replace the Fax PWB (PL 18.5).
6. Replace the Hard Drive (PL 35.2)
7. Replace the SBC PWB (PL 35.2)

Check the following:

- Ensure the FAX is enabled
- Check that the Fax IF Flex Cable from the Riser PWB P/J1 to the SBC PWB P/J23 is not damaged, that it is properly connected and that the connectors are not damaged
- Go to the OF 17-1 FAX Entry RAP and check that the Fax settings are correct
- Reload SW using GP 9.
- Replace the Fax IF Flex Cable (PL 18.5).
- Replace the Fax PWB (PL 18.5).
- Replace the Hard Drive (PL 35.2)
- Replace the SBC PWB (PL 35.2)

320-342 Fax File Integrity Fault - TBD

BSD-ON:BSD 34.1 - FAX

Error accessing file on a NV device

See Note to Reviewer for 320-322

Initial Actions

Check that the Fax PWB is fully seated in the connector P/J2 on the Riser PWB.

Check that the customer phone lines are properly connected to the Fax PWB and are not damaged.

Procedure

Print a Configuration Sheet. **The Configuration Sheet indicates the Fax PWB is installed.**

Y N

Perform the following in order:

1. Check that the Fax IF Flex Cable from the Riser PWB P/J1 to the SBC PWB P/J23 is not damaged, that it is properly connected and that the connectors are not damaged
2. Go to the OF 17-1 FAX Entry RAP and check that the Fax settings are correct
3. Reload SW using GP 9.
4. Replace the Fax IF Flex Cable (PL 18.5).
5. Replace the Fax PWB (PL 18.5).
6. Replace the Hard Drive (PL 35.2)
7. Replace the SBC PWB (PL 35.2)

Check the following:

- Ensure the FAX is enabled
- Check that the Fax IF Flex Cable from the Riser PWB P/J1 to the SBC PWB P/J23 is not damaged, that it is properly connected and that the connectors are not damaged
- Go to the OF 17-1 FAX Entry RAP and check that the Fax settings are correct
- Reload SW using GP 9.
- Replace the Fax IF Flex Cable (PL 18.5).
- Replace the Fax PWB (PL 18.5).
- Replace the Hard Drive (PL 35.2)
- Replace the SBC PWB (PL 35.2)

320-345 Fax Port 1 Modem Failure

BSD-ON:BSD 34.1 - FAX

Fax Port 1 Modem Failure

Initial Actions

Check that the Fax PWB is fully seated in the connector P/J2 on the Riser PWB.

Check that the customer phone lines are properly connected to the Fax PWB and are not damaged.

Procedure

Print a Configuration Sheet. **The Configuration Sheet indicates the Fax PWB is installed.**

Y N

Perform the following in order:

1. Check that the Fax IF Flex Cable from the Riser PWB P/J1 to the SBC PWB P/J23 is not damaged, that it is properly connected and that the connectors are not damaged
2. Go to the OF 17-1 FAX Entry RAP and check that the Fax settings are correct
3. Reload SW using GP 9.
4. Replace the Fax IF Flex Cable (PL 18.5).
5. Replace the Fax PWB (PL 18.5).
6. Replace the Hard Drive (PL 35.2)
7. Replace the SBC PWB (PL 35.2)

Check the following:

- Ensure the FAX is enabled
- Check that the Fax IF Flex Cable from the Riser PWB P/J1 to the SBC PWB P/J23 is not damaged, that it is properly connected and that the connectors are not damaged
- Go to the OF 17-1 FAX Entry RAP and check that the Fax settings are correct
- Reload SW using GP 9.
- Replace the Fax IF Flex Cable (PL 18.5).
- Replace the Fax PWB (PL 18.5).
- Replace the Hard Drive (PL 35.2)
- Replace the SBC PWB (PL 35.2)

320-701 Fax Phonebook Download Fault

BSD-ON:BSD 34.1 - FAX

Phonebook download failed

Initial Actions

Check that the Fax PWB is fully seated in the connector P/J2 on the Riser PWB.

Check that the customer phone lines are properly connected to the Fax PWB and are not damaged.

Procedure

Print a Configuration Sheet. **The Configuration Sheet indicates the Fax PWB is installed.**

Y N

Perform the following in order:

1. Check that the Fax IF Flex Cable from the Riser PWB P/J1 to the SBC PWB P/J23 is not damaged, that it is properly connected and that the connectors are not damaged
2. Go to the OF 17-1 FAX Entry RAP and check that the Fax settings are correct
3. Reload SW using GP 9.
4. Replace the Fax IF Flex Cable (PL 18.5).
5. Replace the Fax PWB (PL 18.5).
6. Replace the Hard Drive (PL 35.2)
7. Replace the SBC PWB (PL 35.2)

Check the following:

- Ensure the FAX is enabled
- Check that the Fax IF Flex Cable from the Riser PWB P/J1 to the SBC PWB P/J23 is not damaged, that it is properly connected and that the connectors are not damaged
- Go to the OF 17-1 FAX Entry RAP and check that the Fax settings are correct
- Reload SW using GP 9.
- Replace the Fax IF Flex Cable (PL 18.5).
- Replace the Fax PWB (PL 18.5).
- Replace the Hard Drive (PL 35.2)
- Replace the SBC PWB (PL 35.2)

320-710 Fax Immediate Image Overwrite (IIO) Error

BSD-ON:BSD 34.1 - FAX

IIO Error has occurred on the fax card when overwriting the job

Initial Actions

Check that the Fax PWB is fully seated in the connector P/J2 on the Riser PWB.

Check that the customer phone lines are properly connected to the Fax PWB and are not damaged.

Procedure

Print a Configuration Sheet. **The Configuration Sheet indicates the Fax PWB is installed.**

Y N

Perform the following in order:

1. Check that the Fax IF Flex Cable from the Riser PWB P/J1 to the SBC PWB P/J23 is not damaged, that it is properly connected and that the connectors are not damaged
2. Go to the OF 17-1 FAX Entry RAP and check that the Fax settings are correct
3. Reload SW using GP 9.
4. Replace the Fax IF Flex Cable (PL 18.5).
5. Replace the Fax PWB (PL 18.5).
6. Replace the Hard Drive (PL 35.2)
7. Replace the SBC PWB (PL 35.2)

Check the following:

- Ensure the FAX is enabled
- Check that the Fax IF Flex Cable from the Riser PWB P/J1 to the SBC PWB P/J23 is not damaged, that it is properly connected and that the connectors are not damaged
- Go to the OF 17-1 FAX Entry RAP and check that the Fax settings are correct
- Reload SW using GP 9.
- Replace the Fax IF Flex Cable (PL 18.5).
- Replace the Fax PWB (PL 18.5).
- Replace the Hard Drive (PL 35.2)
- Replace the SBC PWB (PL 35.2)

320-711 Fax On Demand Image Overwrite (ODIO) Error

BSD-ON:BSD 34.1 - FAX

ODIO Error has occurred on the fax card when overwriting the compact flash memory

Initial Actions

Check that the Fax PWB is fully seated in the connector P/J2 on the Riser PWB.

Check that the customer phone lines are properly connected to the Fax PWB and are not damaged.

Procedure

Print a Configuration Sheet. **The Configuration Sheet indicates the Fax PWB is installed.**

Y N

Perform the following in order:

1. Check that the Fax IF Flex Cable from the Riser PWB P/J1 to the SBC PWB P/J23 is not damaged, that it is properly connected and that the connectors are not damaged
2. Go to the OF 17-1 FAX Entry RAP and check that the Fax settings are correct
3. Reload SW using GP 9.
4. Replace the Fax IF Flex Cable (PL 18.5).
5. Replace the Fax PWB (PL 18.5).
6. Replace the Hard Drive (PL 35.2)
7. Replace the SBC PWB (PL 35.2)

Check the following:

- Ensure the FAX is enabled
- Check that the Fax IF Flex Cable from the Riser PWB P/J1 to the SBC PWB P/J23 is not damaged, that it is properly connected and that the connectors are not damaged
- Go to the OF 17-1 FAX Entry RAP and check that the Fax settings are correct
- Reload SW using GP 9.
- Replace the Fax IF Flex Cable (PL 18.5).
- Replace the Fax PWB (PL 18.5).
- Replace the Hard Drive (PL 35.2)
- Replace the SBC PWB (PL 35.2)

322-300-05 Image Complete Fault

BSD-ON:BSD 3.3 - SBC - IIT Communication

Image Complete not received from video

Initial Actions

Rerun job after machine recovers

Check the Service Log for the frequency of occurance of this fault.

Check dC122 Fault History for the frequency of occurance of this fault

Procedure

Switch the power off then on. Rerun job. **The fault code reappears.**

Y **N**

Return to Service Call Procedures.

NOTE: *Record the fault in the Service Log. If fault recurs frequently, perform the actions listed in the Y branch of this RAP.*

Perform the following in order:

1. Check all connectors and cables between the IIT PWB and the SBC PWB. IIT cables connect to P/J336 and P/J390 on the SBC PWB, and P/J7191 and P/J7192 on the IIT PWB.
2. Reload SW using GP 9.
3. Replace the IIT PWB (PL 1.6)
4. Replace the IIT Harness (PL 18.3)
5. Replace the IIT Control Harness (PL 18.3)
6. Replace the Hard Drive ([PL 35.2])
7. Replace the SBC PWB (PL 35.2)

322-300-10 DVMA Transfer fault

Failed to transfer image due to decoding error. (EORERROR, HUFFMANERROR, BYTE-COUNTERROR)

Initial Actions

Rerun job after machine recovers

Check the Service Log for the frequency of occurance of this fault.

Check dC122 Fault History and dC120 Fault Counter for the frequency of occurance of this fault

Procedure

Switch the power off then on. Rerun job. **The fault code reappears.**

Y **N**

Return to Service Call Procedures.

NOTE: *Record the fault in the Service Log. If fault recurs frequently, perform the actions listed in the Y branch of this RAP.*

Perform the following in order:

1. Check all connectors and cables between the IIT PWB and the SBC PWB. IIT cables connect to P/J336 and P/J390 on the SBC PWB, and P/J7191 and P/J7192 on the IIT PWB.
2. Reload SW using GP 9.
3. Replace the IIT PWB (PL 1.6)
4. Replace the IIT Harness (PL 18.3)
5. Replace the Hard Drive ([PL 35.2])
6. Replace the IIT Control Harness (PL 18.3)
7. Replace the SBC PWB (PL 35.2)

322-300-16 Clock Overflow Fault

When machine determines that it needs to do a reset in order to avoid an impending real time clock overflow

Procedure

Switch the power off then on. **The fault code reappears.**

Y **N**

Return to Service Call Procedures.

NOTE: *Record the fault in the Service Log. If fault recurs frequently, perform the actions listed in the Y branch of this RAP.*

Perform the following in order:

1. Reload SW using GP 9.
2. Initiaize NVM using dC301
3. Replace the Hard Drive ([PL 35.2])
4. Replace the SBC PWB (PL 35.2)

322-301-05 Scan Resource Fault

Scan resources not available

Initial Actions

Rerun job after machine recovers

Check the Service Log for the frequency of occurance of this fault.

Check dC122 Fault History for the frequency of occurance of this fault

Procedure

Switch the power off then on. Rerun job. **The fault code reappears.**

Y **N**

Return to Service Call Procedures.

NOTE: *Record the fault in the Service Log. If fault recurs frequently, perform the actions listed in the Y branch of this RAP.*

Perform the following in order:

1. Check all connectors and cables between the IIT PWB and the SBC PWB. IIT cables connect to P/J336 and P/J390 on the SBC PWB, and P/J7191 and P/J7192 on the IIT PWB.
2. Reload SW using GP 9.
3. Replace the IIT PWB (PL 1.6)
4. Replace the IIT Harness (PL 18.3)
5. Replace the IIT Control Harness (PL 18.3)
6. Replace the Hard Drive ([PL 35.2])
7. Replace the SBC PWB (PL 35.2)

322-309-04 No Accepts Received Fault

Consecutive no accepts received from a module exceeds threshold value (currently 20).

Five consecutive 22-309-04 will cause 22-319-04.

Initial Actions

Allow five minutes for fault recovery.

Check the Service Log for the frequency of occurance of this fault.

Check dC122 Fault History for the frequency of occurance of this fault

Procedure

Switch the power off then on. **The fault code reappears.**

Y **N**

Return to Service Call Procedures.

NOTE: *Record the fault in the Service Log. If fault recurs frequently, perform the actions listed in the Y branch of this RAP.*

Go to the 322-319-04 IOT Integrity Problem While Printing a Job RAP

322-310-04 Extended Job Service Fault

Pages received from Extended Job Service out of sequence

Procedure

Check that originals are not jammed in DADF. Verify DADF operation with media used by customer. Re-sort and reload ALL originals in the document feeder.

322-311-04 Sequencer Response Fault

Sequencer did not respond with proposal within the required time

Initial Actions

Check the Service Log for the frequency of occurance of this fault.

Check dC122 Fault History for the frequency of occurance of this fault

Procedure

Switch the power off then on. **The fault code reappears.**

Y **N**

Return to Service Call Procedures.

NOTE: *Record the fault in the Service Log. If fault recurs frequently, perform the actions listed in the Y branch of this RAP.*

Perform the following in order:

1. Reload SW using GP 9.
2. Check all cables connected to the SBC PWB and the MCU PWB
3. Replace the MCU PWB (PL 18.1)
4. Replace the Hard Drive ([PL 35.2])
5. Replace the SBC PWB (PL 35.2)

322-314-04 Module Registration Error

Module registration message received beyond required time window.

Initial Actions

Check the Service Log for the frequency of occurance of this fault.

Check dC122 Fault History and dC120 Fault Counter for the frequency of occurance of this fault

Procedure

Switch the power off then on. **The fault code reappears.**

Y **N**

Return to Service Call Procedures.

NOTE: *Record the fault in the Service Log. If fault recurs frequently, perform the actions listed in the Y branch of this RAP.*

Perform the following in order:

1. Reload SW using GP 9.
2. Replace the Hard Drive ([PL 35.2])
3. Replace the SBC PWB (PL 35.2)

322-315-04 Module Completion Fault

One or more modules did not respond with completion message

Initial Actions

Check the Service Log for the frequency of occurance of this fault.

Check dC122 Fault History and dC120 Fault Counter for the frequency of occurance of this fault

Procedure

Switch the power off then on. **The fault code reappears.**

Y **N**

Return to Service Call Procedures.

NOTE: *Record the fault in the Service Log. If fault recurs frequently, perform the actions listed in the Y branch of this RAP.*

Perform the following in order:

1. Reload SW using GP 9.
2. Replace the Hard Drive ([PL 35.2])
3. Replace the SBC PWB (PL 35.2)

322-316-04 Job Paper Tray Fault - TBD - see Note to reviewer

No Paper Tray is configured with the required paper size

Note to Reviewer: Please look at this RAP carefully. The fault isolation process shown below may be too detailed or too simple. Is it likely that this fault will only be confined to the SBC and/or the MCU PWB as all other faults in the functional paths between the SBC and the IIT and the SBC and the trays will result in other, more component specific fault codes?

Initial Actions

Verify that the customer is configuring the job correctly

Check the Service Log for the frequency of occurance of this fault.

Check dC122 Fault History and dC120 Fault Counter for the frequency of occurance of this fault

Procedure

Switch the power off then on. Rerun job. **The fault code reappears.**

Y **N**

Return to Service Call Procedures.

NOTE: *Record the fault in the Service Log. If fault recurs frequently, perform the actions listed in the Y branch of this RAP.*

The Job is a copy job.

Y **N**

Perform the following in order:

1. Rerun the job from a different computer
2. Reload SW using GP 9.
3. Replace the Tray Module PWB (PL 10.6)
4. Replace the Hard Drive ([PL 35.2])
5. Replace the SBC PWB (PL 35.2)

Perform the following in order:

1. Check all connectors and cables between the Tray Module PWB and the trays.
2. Reload SW using GP 9.
3. Replace the IIT PWB (PL 1.6)
4. Replace the Tray Module PWB (PL 10.6)
5. Replace the MCU PWB (PL 18.1)
6. Replace the Hard Drive ([PL 35.2])
7. Replace the SBC PWB (PL 35.2)

322-317-04 Job Finishing Fault - TBD - see reviewer notes

Job requires finishing capability that does not exist

Note to Reviewer: Please look at this RAP carefully. The fault isolation process shown below may be too detailed or too simple. Is it likely that this fault will only be confined to the SBC and/or the MCU PWB as all other faults in the functional paths between the SBC and the IIT and the SBC and the finisher will result in other, more component specific fault codes?

Initial Actions

Verify that the customer is configuring the job correctly

Check the Service Log for the frequency of occurance of this fault.

Check dC122 Fault History and dC120 Fault Counter for the frequency of occurance of this fault

Procedure

Switch the power off then on. Rerun job. **The fault code reappears.**

Y N

Return to Service Call Procedures.

NOTE: *Record the fault in the Service Log. If fault recurs frequently, perform the actions listed in the Y branch of this RAP.*

The Job is a copy job.

Y N

Perform the following in order:

1. Rerun the job from a different computer
2. Reload SW using GP 9.
3. If the finsher is the Integrated Finisher, replace the Finisher PWB (PL 22.7)
4. If the finsher is the LX Finisher, replace the Finisher PWB (PL 23.16)
5. Replace the Hard Drive ([PL 35.2])
6. Replace the SBC PWB (PL 35.2)

Perform the following in order:

1. Check all connectors and cables between the MCU PWB and the Finsher PWB and between the SBC PWB abd the IIT PWB
2. Reload SW using GP 9.
3. Replace the IIT PWB (PL 1.6)
4. If the finsher is the Integrated Finisher, replace the Finisher PWB (PL 22.7)
5. If the finsher is the LX Finisher, replace the Finisher PWB (PL 23.16)
6. Replace the MCU PWB (PL 18.1)
7. Replace the Hard Drive ([PL 35.2])
8. Replace the SBC PWB (PL 35.2)

322-318-04 Job IOT Fault - TBD - see reviewer notes

Job requires an IOT capability that does not exist

Note to Reviewer: Please look at this RAP carefully. The fault isolation process shown below may be too detailed or too simple. Is it likely that this fault will only be confined to the SBC and/or the MCU PWB as all other faults in the functional paths between the MCU and the SBC will result in other, more component specific fault codes?

Initial Actions

Verify that the customer is configuring the job correctly

Check the Service Log for the frequency of occurance of this fault.

Check dC122 Fault History and dC120 Fault Counter for the frequency of occurance of this fault

Procedure

Switch the power off then on. Rerun job. **The fault code reappears.**

Y N

Return to Service Call Procedures.

NOTE: *Record the fault in the Service Log. If fault recurs frequently, perform the actions listed in the Y branch of this RAP.*

The Job is a copy job.

Y N

Perform the following in order:

1. Rerun the job from a different computer
2. Reload SW using GP 9.
3. Replace the Hard Drive ([PL 35.2])
4. Replace the SBC PWB (PL 35.2)

Perform the following in order:

1. Check all connectors and cables conected to the MCU PWB
2. Reload SW using GP 9.
3. Replace the IIT PWB (PL 1.6)
4. Replace the MCU PWB (PL 18.1)
5. Replace the Hard Drive ([PL 35.2])
6. Replace the SBC PWB (PL 35.2)

322-319-04 IOT Integrity Problem While Printing a Job

IOT integrity problem while printing a job.

This fault can result in two ways:

- IOT Cycles down and back up 10 times without printing a page within the same job
- 5 consecutive 22-309-04 will also cause a 22-319-04.

Initial Actions

Check the Service Log for the frequency of occurance of this fault.

Check dC122 Fault History for the frequency of occurance of this fault

Procedure

Switch the power off then on. **The fault code reappears.**

Y **N**

Return to Service Call Procedures.

NOTE: *Record the fault in the Service Log. If fault recurs frequently, perform the actions listed in the Y branch of this RAP.*

Perform the following in order:

1. Reload SW using GP 9.
2. Check all cables connected to the SBC PWB and the MCU PWB
3. Replace the MCU PWB (PL 18.1)
4. Replace the Hard Drive ([PL 35.2])
5. Replace the SBC PWB (PL 35.2)

322-320 Scan to File Install Fault

SM Failed to install scan to file

Initial Actions

Check the Service Log for the frequency of occurance of this fault.

Check dC122 Fault History for the frequency of occurance of this fault

Procedure

Switch the power off then on. **The fault code reappears.**

Y **N**

Return to Service Call Procedures.

NOTE: *Record the fault in the Service Log. If fault recurs frequently, perform the actions listed in the Y branch of this RAP.*

Perform the following in order:

1. Reload SW using GP 9.
2. Replace the Hard Drive ([PL 35.2])
3. Replace the SBC PWB (PL 35.2)

322-321-00 Scan to File Remove Fault

SM Failed to remove Scan to file

Initial Actions

Check the Service Log for the frequency of occurance of this fault.

Check dC122 Fault History for the frequency of occurance of this fault

Procedure

Switch the power off then on. **The fault code reappears.**

Y **N**

Return to Service Call Procedures.

NOTE: *Record the fault in the Service Log. If fault recurs frequently, perform the actions listed in the Y branch of this RAP.*

Perform the following in order:

1. Reload SW using GP 9.
2. Replace the Hard Drive ([PL 35.2])
3. Replace the SBC PWB (PL 35.2)

322-321-04 RS422 Configuration Mismatch

Proposal Response Time Out Error - RS422 Configuration mismatch

Sequencer did not respond with proposal within the required time

Initial Actions

Check the Service Log for the frequency of occurance of this fault.

Check dC122 Fault History and dC120 Fault Counter for the frequency of occurance of this fault

Procedure

Switch the power off then on. **The fault code reappears.**

Y **N**

Return to Service Call Procedures.

NOTE: *Record the fault in the Service Log. If fault recurs frequently, perform the actions listed in the Y branch of this RAP.*

Perform the following in order:

1. Reload SW using GP 9.
2. Replace the Hard Drive ([PL 35.2])
3. Replace the SBC PWB (PL 35.2)

322-322 LAN FAX Install Fault

SM Failed to install Lan FAX

Initial Actions

Check the Service Log for the frequency of occurance of this fault.

Check dC122 Fault History for the frequency of occurance of this fault

Procedure

Switch the power off then on. **The fault code reappears.**

Y **N**

Return to Service Call Procedures.

NOTE: *Record the fault in the Service Log. If fault recurs frequently, perform the actions listed in the Y branch of this RAP.*

Perform the following in order:

1. Reload SW using GP 9.
2. Replace the Hard Drive ([PL 35.2])
3. Replace the SBC PWB (PL 35.2)

322-323 LAN FAX Remove Fault

SM Failed to remove Lan FAX

Initial Actions

Check the Service Log for the frequency of occurance of this fault.

Check dC122 Fault History for the frequency of occurance of this fault

Procedure

Switch the power off then on. **The fault code reappears.**

Y **N**

Return to Service Call Procedures.

NOTE: *Record the fault in the Service Log. If fault recurs frequently, perform the actions listed in the Y branch of this RAP.*

Perform the following in order:

1. Reload SW using GP 9.
2. Replace the Hard Drive ([PL 35.2])
3. Replace the SBC PWB (PL 35.2)

322-324 Scan to E-Mail Install Fault

SM Failed to install Scan to E-mail

Initial Actions

Check the Service Log for the frequency of occurance of this fault.

Check dC122 Fault History for the frequency of occurance of this fault

Procedure

Switch the power off then on. **The fault code reappears.**

Y **N**

Return to Service Call Procedures.

NOTE: *Record the fault in the Service Log. If fault recurs frequently, perform the actions listed in the Y branch of this RAP.*

Perform the following in order:

1. Reload SW using GP 9.
2. Replace the Hard Drive ([PL 35.2])
3. Replace the SBC PWB (PL 35.2)

322-325 Scan to E-Mail Remove Fault

SM Failed to remove Scan to E-mail

Initial Actions

Check the Service Log for the frequency of occurance of this fault.

Check dC122 Fault History for the frequency of occurance of this fault

Procedure

Switch the power off then on. **The fault code reappears.**

Y **N**

Return to Service Call Procedures.

NOTE: *Record the fault in the Service Log. If fault recurs frequently, perform the actions listed in the Y branch of this RAP.*

Perform the following in order:

1. Reload SW using GP 9.
2. Replace the Hard Drive ([PL 35.2])
3. Replace the SBC PWB (PL 35.2)

322-326 IFAX install Fault

SM Failed to install IFAX

Initial Actions

Check the Service Log for the frequency of occurance of this fault.

Check dC122 Fault History for the frequency of occurance of this fault

Procedure

Switch the power off then on. **The fault code reappears.**

Y **N**

Return to Service Call Procedures.

NOTE: *Record the fault in the Service Log. If fault recurs frequently, perform the actions listed in the Y branch of this RAP.*

Perform the following in order:

1. Reload SW using GP 9.
2. Replace the Hard Drive ([PL 35.2])
3. Replace the SBC PWB (PL 35.2)

322-327 IFAX Remove Fault

SM Failed to Remove IFAX

Initial Actions

Check the Service Log for the frequency of occurance of this fault.

Check dC122 Fault History for the frequency of occurance of this fault

Procedure

Switch the power off then on. **The fault code reappears.**

Y **N**

Return to Service Call Procedures.

NOTE: *Record the fault in the Service Log. If fault recurs frequently, perform the actions listed in the Y branch of this RAP.*

Perform the following in order:

1. Reload SW using GP 9.
2. Replace the Hard Drive ([PL 35.2])
3. Replace the SBC PWB (PL 35.2)

322-328 Incomplete System Information

Incomplete System Information.

Accounting Service Data is corrupt.

Initial Actions

Check the Service Log for the frequency of occurance of this fault.

Check dC122 Fault History for the frequency of occurance of this fault

Procedure

Switch the power off then on. **The fault code reappears.**

Y **N**

Return to Service Call Procedures.

NOTE: *Record the fault in the Service Log. If fault recurs frequently, perform the actions listed in the Y branch of this RAP.*

Perform the following in order:

1. Reload SW using GP 9.
2. Replace the Hard Drive ([PL 35.2])
3. Replace the SBC PWB (PL 35.2)

322-330-00 PagePack PIN Entry Locked

Pagepack PIN (supplies plan activation code) entry locked.

Initial Actions

Check the Service Log for the frequency of occurance of this fault.

Check dC122 Fault History for the frequency of occurance of this fault

Procedure

Switch the power off then on. **The fault code reappears.**

Y **N**

Return to Service Call Procedures.

NOTE: *Record the fault in the Service Log. If fault recurs frequently, perform the actions listed in the Y branch of this RAP.*

Perform the following in order:

1. Reload SW using GP 9.
2. Replace the Hard Drive ([PL 35.2])
3. Replace the SBC PWB (PL 35.2)

322-330-01 List Jobs Request Timed Out Between UI CCS

List Jobs Request Timed out between UI and CCS

Initial Actions

Check the Service Log for the frequency of occurance of this fault.

Check dC122 Fault History for the frequency of occurance of this fault

Procedure

Switch the power off then on. **The fault code reappears.**

Y **N**

Return to Service Call Procedures.

NOTE: *Record the fault in the Service Log. If fault recurs frequently, perform the actions listed in the Y branch of this RAP.*

Perform the following in order:

1. Reload SW using GP 9.
2. Replace the Hard Drive ([PL 35.2])
3. Replace the SBC PWB (PL 35.2)

322-330-02 Queue to NC Print Timeout

List Jobs Request Timed out between CCS and SBC Print Service

Initial Actions

Check the Service Log for the frequency of occurance of this fault.

Check dC122 Fault History for the frequency of occurance of this fault

Procedure

Switch the power off then on. **The fault code reappears.**

Y **N**

Return to Service Call Procedures.

NOTE: *Record the fault in the Service Log. If fault recurs frequently, perform the actions listed in the Y branch of this RAP.*

Perform the following in order:

1. Reload SW using GP 9.
2. Replace the Hard Drive ([PL 35.2])
3. Replace the SBC PWB (PL 35.2)

322-330-03 Queue to Scan to File Timeout

List Jobs Request Timed out between CCS and Scan to File Service

Initial Actions

Check the Service Log for the frequency of occurance of this fault.

Check dC122 Fault History for the frequency of occurance of this fault

Procedure

Switch the power off then on. **The fault code reappears.**

Y **N**

Return to Service Call Procedures.

NOTE: *Record the fault in the Service Log. If fault recurs frequently, perform the actions listed in the Y branch of this RAP.*

Perform the following in order:

1. Reload SW using GP 9.
2. Replace the Hard Drive ([PL 35.2])
3. Replace the SBC PWB (PL 35.2)

322-330-04 Queue to FaxSend Timeout

List Jobs Request Timed out between CCS and Scan To Fax Service

Initial Actions

Check the Service Log for the frequency of occurance of this fault.

Check dC122 Fault History for the frequency of occurance of this fault

Procedure

Switch the power off then on. **The fault code reappears.**

Y **N**

Return to Service Call Procedures.

NOTE: *Record the fault in the Service Log. If fault recurs frequently, perform the actions listed in the Y branch of this RAP.*

Perform the following in order:

1. Reload SW using GP 9.
2. Replace the Hard Drive ([PL 35.2])
3. Replace the SBC PWB (PL 35.2)

322-330-05 Queue to DC JOB service Timeout

List Jobs Request Timed out between Queue Utility and DC Job Services

Initial Actions

Check the Service Log for the frequency of occurance of this fault.

Check dC122 Fault History for the frequency of occurance of this fault

Procedure

Switch the power off then on. **The fault code reappears.**

Y **N**

Return to Service Call Procedures.

NOTE: *Record the fault in the Service Log. If fault recurs frequently, perform the actions listed in the Y branch of this RAP.*

Perform the following in order:

1. Reload SW using GP 9.
2. Replace the Hard Drive ([PL 35.2])
3. Replace the SBC PWB (PL 35.2)

322-330-06 Queue to Scan to Distribution Timeout

SBC Scan to Distribution Service not responding to List Jobs RPC call

Initial Actions

Check the Service Log for the frequency of occurance of this fault.

Check dC122 Fault History for the frequency of occurance of this fault

Procedure

Switch the power off then on. **The fault code reappears.**

Y **N**

Return to Service Call Procedures.

NOTE: *Record the fault in the Service Log. If fault recurs frequently, perform the actions listed in the Y branch of this RAP.*

Perform the following in order:

1. Reload SW using GP 9.
2. Replace the Hard Drive ([PL 35.2])
3. Replace the SBC PWB (PL 35.2)

322-332 Plan Conversion Entry Locked

Plan Conversion entry locked due to repeated incorrect entry attempts.

Initial Actions

Check the Service Log for the frequency of occurance of this fault.

Check dC122 Fault History for the frequency of occurance of this fault

Procedure

Switch the power off then on. **The fault code reappears.**

Y **N**

Return to Service Call Procedures.

NOTE: *Record the fault in the Service Log. If fault recurs frequently, perform the actions listed in the Y branch of this RAP.*

Perform the following in order:

1. Reload SW using GP 9.
2. Replace the Hard Drive ([PL 35.2])
3. Replace the SBC PWB (PL 35.2)

322-335 JBA install Fault

SM Failed to install Job Based Accounting

Initial Actions

Check the Service Log for the frequency of occurance of this fault.

Check dC122 Fault History for the frequency of occurance of this fault

Procedure

Switch the power off then on. **The fault code reappears.**

Y **N**

Return to Service Call Procedures.

NOTE: *Record the fault in the Service Log. If fault recurs frequently, perform the actions listed in the Y branch of this RAP.*

Perform the following in order:

1. Reload SW using GP 9.
2. Replace the Hard Drive ([PL 35.2])
3. Replace the SBC PWB (PL 35.2)

322-336 JBA Remove Fault

SM Failed to remove Job Based Accounting

Initial Actions

Check the Service Log for the frequency of occurance of this fault.

Check dC122 Fault History for the frequency of occurance of this fault

Procedure

Switch the power off then on. **The fault code reappears.**

Y **N**

Return to Service Call Procedures.

NOTE: *Record the fault in the Service Log. If fault recurs frequently, perform the actions listed in the Y branch of this RAP.*

Perform the following in order:

1. Reload SW using GP 9.
2. Replace the Hard Drive ([PL 35.2])
3. Replace the SBC PWB (PL 35.2)

322-337 ODIO install fault

SM Failed to install disk overwrite

Initial Actions

Check the Service Log for the frequency of occurance of this fault.

Check dC122 Fault History for the frequency of occurance of this fault

Procedure

Switch the power off then on. **The fault code reappears.**

Y **N**

Return to Service Call Procedures.

NOTE: *Record the fault in the Service Log. If fault recurs frequently, perform the actions listed in the Y branch of this RAP.*

Perform the following in order:

1. Reload SW using GP 9.
2. Replace the Hard Drive ([PL 35.2])
3. Replace the SBC PWB (PL 35.2)

322-338 ODIO Remove Fault

SM Failed to remove Disk Overwrite

Initial Actions

Check the Service Log for the frequency of occurance of this fault.

Check dC122 Fault History for the frequency of occurance of this fault

Procedure

Switch the power off then on. **The fault code reappears.**

Y **N**

Return to Service Call Procedures.

NOTE: *Record the fault in the Service Log. If fault recurs frequently, perform the actions listed in the Y branch of this RAP.*

Perform the following in order:

1. Reload SW using GP 9.
2. Replace the Hard Drive ([PL 35.2])
3. Replace the SBC PWB (PL 35.2)

322-339 IIO install Fault

SM Failed to install Job Overwrite

Initial Actions

Check the Service Log for the frequency of occurance of this fault.

Check dC122 Fault History for the frequency of occurance of this fault

Procedure

Switch the power off then on. **The fault code reappears.**

Y **N**

Return to Service Call Procedures.

NOTE: *Record the fault in the Service Log. If fault recurs frequently, perform the actions listed in the Y branch of this RAP.*

Perform the following in order:

1. Reload SW using GP 9.
2. Replace the Hard Drive ([PL 35.2])
3. Replace the SBC PWB (PL 35.2)

322-340 IIO Remove Fault

SM Failed to remove Job Overwrite

Initial Actions

Check the Service Log for the frequency of occurance of this fault.

Check dC122 Fault History for the frequency of occurance of this fault

Procedure

Switch the power off then on. **The fault code reappears.**

Y **N**

Return to Service Call Procedures.

NOTE: *Record the fault in the Service Log. If fault recurs frequently, perform the actions listed in the Y branch of this RAP.*

Perform the following in order:

1. Reload SW using GP 9.
2. Replace the Hard Drive ([PL 35.2])
3. Replace the SBC PWB (PL 35.2)

322-350-01 Software Detects Non-Valid Xerox SOK 1

Software detects non-valid Xerox SIM

Procedure

There is a serial number problem, a copyright problem, or a SIM problem. Try reinstalling the feature using the SIM located in the Tray 2 compartment on the right side of the tray. If the problem continues, call service support for corrective actions.

322-350-02 Software Detects Non-Valid Xerox SOK 2 or 3

Software detects non-valid Xerox SIM

Procedure

There is a serial number problem, a copyright problem, or SIM problem. Try reinstalling the feature using the SIM located in the Tray 2 compartment on the right side of the tray. If the problem continues, call service support for corrective actions.

322-351-01 SOK 1 Write Failure

SIM Write Failure

Procedure

There is a serial number problem, a copyright problem, or SIM problem. Try reinstalling the feature using the SIM located in the Tray 2 compartment on the right side of the tray. If the problem continues, call service support for corrective actions.

322-351-02 SOK 2 Write Failure

SIM Write Failure

Procedure

There is a serial number problem, a copyright problem, or SIM problem. Try reinstalling the feature using the SIM located in the Tray 2 compartment on the right side of the tray. If the problem continues, call service support for corrective actions.

322-351-03 SOK 3 Write Failure

SIM Write Failure

Procedure

There is a serial number problem, a copyright problem, or SIM problem. Try reinstalling the feature using the SIM located in the Tray 2 compartment on the right side of the tray. If the problem continues, call service support for corrective actions.

322-352-00 Serial Number Missing From Memory - TBD - see Note to Reviewer

Note to Reviewer: This RAP needs to be reviewed carefully and corrected. The RAP was taken from Northwood, but it was incorrect even for Northwood. The P/Js called out in the RAP do not exist on the Northwood MCU PWB so there is no way to trace back and find out what the equivalent P/Js are for Javelin.

Serial Number Update Required.

Serial number lost/missing. A Password routine may be required to write serial number to machine

Initial Actions

Confirm that the machine serial number displayed on the UI (select **Machine Status**, **Machine Information Screen**) or the Configuration Sheet (if the UI is unavailable), and the serial number on the label on machine frame match. If they do not match please notify the FE/NTS.

Make sure PWBs and PJ connectors among IOT Drive, MCU, SBC, UI, and IIT are seated properly

Check dC122 for Communications faults (Chain 303). These can prevent serial number synchronization and must be addressed before proceeding

Enter diagnostics and select **Clear Counters,** Exit and Reboot at Service exit and exit diagnostics.

Have new SBC NVM PWB, MCU NVM PWB, and IIT/IPS PWB available before trouble shooting problem.

CAUTION

Do not swap NVM PWBs, or the IIT/IPS PWB between Machines.

CAUTION

Do not remove the batteries from any PWBs while making voltage checks in this RAP.

CAUTION

If any of the billing data PWBs is to be replaced (SBC NVM PWB, MCU NVM PWB, IIT/IPS PWB) replace them one PWB at a time, as directed in this procedure. Replacing them all at the same time will cause unrecoverable NVM corruption.

If failure persists, wait 12 minutes before powering off / powering on the machine.

Procedure

Check the serial numbers on the UI (select **Machine Status**, **Machine Information Screen**) against the label on the machine frame and the Configuration Report. **The serial numbers match.**

Y N

Power off the machine and disconnect the power cord. Contact the field engineer (RSE)/ NTS immediately.

A

A

More than one of the following PWBs have been replaced at the same time: SBC NVM PWB, MCU NVM PWB, IIT/IPS PWB.

Y N

Install the original PWB back into the machine, and reboot the machine. **The 322-352 Fault Code is still present.**

Y N

If any other fault codes exist, go to the specific RAP for that fault code. Otherwise, go to Call Flow.

Perform the following steps in the order indicated:

- Reseat P/J 407 on the MCU PWB.
- Reseat the wire harness between the IIT PWB and SBC PWB.
- Reseat each board and connectors on the MCU PWB, MCU NVM PWB, SBC PWB, SBC NVM PWB and the cables between the IIT PWB and the SBC Module.
- Check for + 3.3 VDC between B2 (red) and B1 (black) at P/J 707 on the MCU PWB. If the voltage is not within specification, go to the 303-316 .
- Check for + 3.3 VDC between B2 (red) and B1 (black) at P/J 407 on the MCU PWB. If the voltage is not within specification, go to the TBD - this RAP doesn't exist in database-find correct one [RAP 362-310]] RAP.

The original boards are still available.

Y N

Use dC132 to restore serial number and billing data integrity using the Serial Number Reinitialization Request Form.

NOTE: *It may take up to 24 hours to receive a password from ACAST*

Install the original PWBs back into the machine, and perform the following steps in the order indicated:

- Reseat P/J 407 on the MCU PWB.
- Reseat the wire harness between the IIT PWB and SBC PWB.
- Reseat each board and connectors on the MCU PWB, MCU NVM PWB, SBC PWB, SBC NVM PWB and the cables between the IIT PWB and the SBC Module.
- Check for + 3.3 VDC between B2 (red) and B1 (black) at P/J 707 on the MCU PWB. If the voltage is not within specification, go to the 303-316 .
- Check for + 3.3 VDC between B2 (red) and B1 (black) at P/J 407 on the MCU PWB. If the voltage is not within specification, go to theTBD - this RAP doesn't exist in database-find correct one [RAP 362-310]].

The fault code 322-352 is still present.

Y N

If other fault codes are present, go to the specific fault code RAP. If no other fault codes exist, go to Call Flow.

The red light on the MCU PWB is flashing.

Y N

Perform each activity until the fault is cleared.

- Replace the Hard Drive ([PL 35.2])
- Replace the SBC PWB (PL 35.2). Install software per GP 9, and power on the machine.

B

B

- Replace the MCU NVM PWB (PL 18.1). Install software per GP 9, and power on the machine.
- Replace the IIT/IPS PWB (PL 1.6). Install software per GP 9, and power on the machine.
- Enter Diagnostics and refresh the screen at dC120 , and dC122 .

Other fault codes are present.

Y **N**

Go to Call Flow.

Go to the particular fault code RAP. If, after completing any remaining fault code RAPs, the 322-352 fault code is still present, repeat the 322-352 Rap one time. If the fault code still remains, contact the CTS, FE(RSE) or NTS for assistance.

Replace the MCU NVM PWB (PL 18.1). Install software per GP 9, and power on the machine. If the fault code remains, contact the CTS, FE(RSE) or NTS for assistance.

322-352-01 Serial Update Required

Serial Update Required

NOTE: *Password routine will be required to write serial number to the SOK 1, IOT and SBC*

Procedure

Contact service support to perform a dC132 .

322-360 Service Plan Lost or Missing - TBD - see Note to reviewer

Note to Reviewer: Please verify that the process listed will resolve this problem. This is a new RAP and is not listed in the Northwood database. All of the information in FS 9.031 is listed below.

Three way sync of ServicePlan could not be resolved

Service Plan lost/missing. A Password routine may be required to write Service Plan to machine.

Procedure

Switch machine power off then on.

Restore hardware that was replaced. Recover using SIM (PagePack only) A Password routine may be required on some machines. Contact service support.

322-370 Unable to Communicate With XSA Database - TBD see note to reviewer

XSA communication lost

NOTE to Reviewer: There is no real fault isolation here - it would help if the term XSA were defined - does it stand for Xerox Secure Server or something else, and if so what? Where would the CSE find the “network connections” to the XSA?

Procedure

Switch machine power off then on. Check network connections to XSA server and have System Administrator check configuration for XSA refer to System Administrator Guide.

322-371 Fax Application Registration Error - TBD see Reviewer Notes

Note to Reviewer: Please verify that listed procedure will resolve this problem.

Set by Fax Service when it gets no response from Service Registry when trying to Register.

Initial Actions

Check the Service Log for the frequency of occurance of this fault.

Check dC122 Fault History for the frequency of occurance of this fault

Procedure

Switch the power off then on. **The fault code reappears.**

Y **N**

Return to Service Call Procedures.

NOTE: *Record the fault in the Service Log. If fault recurs frequently, perform the actions listed in the Y branch of this RAP.*

Perform the following in order:

1. Reload SW using GP 9.
2. Replace the Fax PWB (PL 18.5)
3. Replace the Hard Drive ([PL 35.2])
4. Replace the SBC PWB (PL 35.2)

322-372 Fax Application Un-Registration Error - TBD see Reviewer Notes

Note to Reviewer: Please verify that listed procedure will resolve this problem.

Fax Service can not un-register. Set by Fax Service when it gets no response from Service Registry when trying to Un-Register

Initial Actions

Check the Service Log for the frequency of occurance of this fault.

Check dC122 Fault History for the frequency of occurance of this fault

Procedure

Switch the power off then on. **The fault code reappears.**

Y **N**

Return to Service Call Procedures.

NOTE: *Record the fault in the Service Log. If fault recurs frequently, perform the actions listed in the Y branch of this RAP.*

Perform the following in order:

1. Reload SW using GP 9.
2. Replace the Fax PWB (PL 18.5)
3. Replace the Hard Drive ([PL 35.2])
4. Replace the SBC PWB (PL 35.2)

322-407 Embedded Fax Install Fault - TBD see Reviewer Notes

Note to Reviewer: Please verify that listed procedure will resolve this problem. See also 322-419. Which RAP works better for fault isolation and resolution?

SM Failed To Install Embedded Fax

Initial Actions

Check the Service Log for the frequency of occurance of this fault.

Check dC122 Fault History for the frequency of occurance of this fault

Procedure

Switch the power off then on. **The fault code reappears.**

Y **N**

Return to Service Call Procedures.

NOTE: *Record the fault in the Service Log. If fault recurs frequently, perform the actions listed in the Y branch of this RAP.*

Perform the following in order:

1. Reload SW using GP 9.
2. Replace the Fax PWB (PL 18.5)
3. Replace the Hard Drive ([PL 35.2])
4. Replace the SBC PWB (PL 35.2)

322-417 Embedded Fax Removal Fault - TBD see Reviewer Notes

Note to Reviewer: Please verify that listed procedure will resolve this problem. See also 322-421. Which RAP works better for fault isolation and resolution?

SM Failed To Removal Embedded Fax

Initial Actions

Check the Service Log for the frequency of occurance of this fault.

Check dC122 Fault History for the frequency of occurance of this fault

Procedure

Switch the power off then on. **The fault code reappears.**

Y **N**

Return to Service Call Procedures.

NOTE: *Record the fault in the Service Log. If fault recurs frequently, perform the actions listed in the Y branch of this RAP.*

Perform the following in order:

1. Reload SW using GP 9.
2. Replace the Fax PWB (PL 18.5)
3. Replace the Hard Drive ([PL 35.2])
4. Replace the SBC PWB (PL 35.2)

322-419 Enable Embedded Fax Fault - TBD see Reviewer Notes

Note to Reviewer: Please verify that listed procedure will resolve this problem. See also 322-407. Which RAP works better for fault isolation and resolution?

SM Failed To Enable Embedded Fax

Procedure

1. Switch machine power off then on.
2. Check Configuration Report, under Machine Hardware. Ensure that Fax Card is listed as Present (machine recognizes Fax Card). If the Fax Cardcdoes not show as Present on Configuration Report, switch off machine power and reseat the Fax Card (PL 35.2).
3. Switch on machine power and check the Configuration Report under Services to see if the machine recognizes the Fax Card is installed and enabled. If enabled, return to Service Call Procedures. If not, continue with this RAP.
4. Enter Tools mode GP 2 (Admin). Select **Service Settings > Fax Setup**
5. Select **Enabled**. Switch machine power off and then on.
6. If problem still exists perform the following in order:
   a. Reload SW using GP 9
   b. Replace Fax Card (PL 18.5).
   c. Replace the Hard Drive ([PL 35.2])
   d. Replace the SBC PWB (PL 35.2)
7. If still enabled contact Service Support for assistance.

322-421 Disable Embedded Fax Fault - TBD see Reviewer Notes

Note to Reviewer: Please verify that listed procedure will resolve this problem. See also 322-417. Which RAP works better for fault isoation and resolution?

SM Failed To Disable Embedded Fax.

Procedure

1. Switch machine power off then on.
2. Check Configuration Report, under Services to see if Embedded Fax is disabled.
3. If not, enter Tools mode GP 2 (Admin). Select **Service Settings > Fax Setup**.
4. Select **Disabled**. Switch machine power off and then on..
5. Print a Configuration Report. Check report, Embedded Fax should now be disabled.
6. If disabled, return to Service Call Procedures.
7. If still enabled switch off machine power and remove Fax Card from machine if it is still present.
8. Switch power off and on, then check new Configuration Report to ensure Embedded Fax is disabled.
9. If problem still exists perform the following in order:
   a. Reload SW using GP 9
   b. Replace Fax Card (PL 18.5).
   c. Replace the Hard Drive ([PL 35.2])
   d. Replace the SBC PWB (PL 35.2)
10. If still enabled contact Service Support for assistance.

322-701-04 Module Completion Fault

Module completion message received after IOT returned to standby

Initial Actions

Check the Service Log for the frequency of occurance of this fault.

Check dC122 Fault History for the frequency of occurance of this fault

Procedure

Switch the power off then on. **The fault code reappears.**

Y **N**

Return to Service Call Procedures.

NOTE: *Record the fault in the Service Log. If fault recurs frequently, perform the actions listed in the Y branch of this RAP.*

Perform the following in order:

1. Reload SW using GP 9.
2. Replace the Hard Drive ([PL 35.2])
3. Replace the SBC PWB (PL 35.2)

322-720 Service Registry Bad Data / Corrupted.

Service registry bad data/corrupted.

Initial Actions

Check the Service Log for the frequency of occurance of this fault.

Check dC122 Fault History for the frequency of occurance of this fault

Procedure

Switch the power off then on. **The fault code reappears.**

Y **N**

Return to Service Call Procedures.

NOTE: *Record the fault in the Service Log. If fault recurs frequently, perform the actions listed in the Y branch of this RAP.*

Perform the following in order:

1. Reload SW using GP 9.
2. Replace the Fax PWB (PL 18.5)
3. Replace the Hard Drive ([PL 35.2])
4. Replace the SBC PWB (PL 35.2)

322-721 Triple A Gets No Response From SRS

Triple A gets no response from SRS.

Initial Actions

Check the Service Log for the frequency of occurance of this fault.

Check dC122 Fault History for the frequency of occurance of this fault

Procedure

Switch the power off then on. **The fault code reappears.**

Y **N**

Return to Service Call Procedures.

NOTE: *Record the fault in the Service Log. If fault recurs frequently, perform the actions listed in the Y branch of this RAP.*

Perform the following in order:

1. Reload SW using GP 9.
2. Replace the Hard Drive ([PL 35.2])
3. Replace the SBC PWB (PL 35.2)

322-750-04 Output Device Configuration Mismatch - TBD - see reviewer Notes

Note to Reviewer: Please verify that listed procedure will resolve this problem. Also verify thst the output devices listed are appropriate for Javelin, and list any others which may be appropriate.

Output Device Configuration Mismatch

This fault occurs after the 2nd user confirmation of a configuration mismatch if the System has detected that Output Device (Disc Finisher, High Capacity Disc Finisher, OCT, one or more Mailboxes or no output device configured) has changed during the Power On Sequence.

Initial Actions

Check output device connections.

Check the Service Log for the frequency of occurance of this fault.

Check dC122 Fault History for the frequency of occurance of this fault

Procedure

Switch the power off then on. **The fault code reappears.**

Y **N**

Return to Service Call Procedures.

NOTE: *Record the fault in the Service Log. If fault recurs frequently, perform the actions listed in the Y branch of this RAP.*

Perform the following in order:

1. Reload SW using GP 9.
2. Replace the Hard Drive ([PL 35.2])
3. Replace the SBC PWB (PL 35.2)

322-750-17 Accessory Card Configuration Mismatch - TBD - see reviewer Notes

Note to Reviewer: Please verify that listed procedure will resolve this problem. Also verify thst the output devices listed are appropriate for Javelin, and list any others which may be appropriate.

Accessory Card Configuration Mismatch\

When the System detects that the Accessory Card Configuration (Present vs. Not Present) Mismatch has changed during the Power On Sequence

Initial Actions

Check output device connections.

Check the Service Log for the frequency of occurance of this fault.

Check dC122 Fault History for the frequency of occurance of this fault

Procedure

Switch the power off then on. **The fault code reappears.**

Y **N**

Return to Service Call Procedures.

NOTE: *Record the fault in the Service Log. If fault recurs frequently, perform the actions listed in the Y branch of this RAP.*

Perform the following in order:

1. Reload SW using GP 9.
2. Replace the Hard Drive ([PL 35.2])
3. Replace the SBC PWB (PL 35.2)

322-751-04 Paper Tray Configuration Mismatch

BSD-ON:BSD 3.2 - MCU - Tray Module Communication

BSD-ON:BSD 7.1 - Tray 1 Paper Size Sensing

BSD-ON:BSD 7.2 - Tray 2 Paper Size Sensing

BSD-ON:BSD 7-3 - Tray 3 Paper Size Sensing

BSD-ON:BSD 7.4 - Tray 4 Paper Size Sensing

BSD-ON:BSD 7.5 - Tray 5 (MSI) Paper Size Sensing

Paper Tray Configuration Mismatch

This fault occurs after the 2nd user confirmation of a configuration mismatch if the System has detected that the Paper Tray Configuration has changed during the Power On Sequence.

Initial Actions

Check the Service Log for the frequency of occurance of this fault.

Check dC122 Fault History for the frequency of occurance of this fault

Procedure

Switch the power off then on. **The fault code reappears.**

Y **N**

Return to Service Call Procedures.

NOTE: *Record the fault in the Service Log. If fault recurs frequently, perform the actions listed in the Y branch of this RAP.*

Perform the following in order:

1. Check the connectors between the SBC PWB and the MCU PWB, and between the MCU PWB and the tray module paper size sensors as shown on the BSDs.
2. Reload SW using GP 9.
3. Replace the Tray Module PWB (PL 10.7)
4. Replace the MCU PWB (PL 18.1)
5. Replace the Hard Drive ([PL 35.2])
6. Replace the SBC PWB (PL 35.2)

322-754-17 UI Configuration Change Fault

BSD-ON:BSD 3.4 - SBC - UI Communication

When the System detects the UI Configuration has changed during the Power On Sequence

Initial Actions

Check the Service Log for the frequency of occurance of this fault.

Check dC122 Fault History for the frequency of occurance of this fault

Procedure

Switch the power off then on. **The fault code reappears.**

Y **N**

Return to Service Call Procedures.

NOTE: *Record the fault in the Service Log. If fault recurs frequently, perform the actions listed in the Y branch of this RAP.*

Perform the following in order:

1. Check the connectors between the SBC PWB and the Control Panel Assembly as shown on the BSD.
2. Reload SW using GP 9.
3. Replace the Control Panel Assembly (PL 1.7)
4. Replace the Hard Drive ([PL 35.2])
5. Replace the SBC PWB (PL 35.2)

322-755-17 RDT Configuration Mismatch - TBD - see reviewer notes

Note to Reviewer: Please verify that listed procedure will resolve this problem. It is not clear what the acronym RDT represents and why the “output device connections have to do with the “RDT”. The only definitions for RDT found were Remote Data Transfer and Remote Diagnostics Transfer neither of which seems applicable.

RDT Configuration Mismatch

Initial Actions

Check output device connections.

Check the Service Log for the frequency of occurance of this fault.

Check dC122 Fault History for the frequency of occurance of this fault

Procedure

Switch the power off then on. **The fault code reappears.**

Y **N**

Return to Service Call Procedures.

NOTE: *Record the fault in the Service Log. If fault recurs frequently, perform the actions listed in the Y branch of this RAP.*

Perform the following in order:

1. Reload SW using GP 9.
2. Replace the Hard Drive ([PL 35.2])
3. Replace the SBC PWB (PL 35.2)

024-923 Y Toner Empty RAP

BSD-ON:BSD 9.9 - Toner Cartridge Life Control (Y, M)

NOTE: *The chain/link fault code for this RAP is an internal machine code and is never displayed or logged in Fault Code History. Use this RAP to troubleshoot persistent machine status conditions that cannot be cleared by performing the indicated process (e.g., loading paper, closing a cover, replacing a CRU, etc). Entry to this RAP is usually via the Machine Status Faults RAP located in the Other Faults section, or a chain/link listing on a BSD.*

The Yellow Toner Cartridge is empty. This fault requires service only if the message appears before the Toner Cartridge is actually depleted.

NOTE: *Continuous running of high density prints can temporarily deplete the toner supply.*

Initial Actions

- Ensure that there is toner and the toner is evenly distributed in the Yellow cartridge.
- Check the Yellow ATC Sensor for blockage or contaminants.
- Check the drive system from the Developer Drive Motor to the Yellow Developer Housing for damage.

Procedure

- Replace the Toner Cartridge. If the problem continues, perform the following:
- Ensure that the customer is programming a job within the parameters of the machine utilizing the UI.
- Disconnect then reconnect the connectors to the IIT, UI I/F, SBC, MCU all PWBs and components connected to them (RAM, Firmware module, EEPROM)
- Check the sw version of the controller sw - update if required using GP 9.
- Replace the Hard Drive ([PL 35.2])
- Replace MCU PWB (PL 18.1)
- Replace SBC PWB (PL 35.2) (If changing the PWBs does not fix the problem, reinstall the original SBC & MCU)
- Check the circuits using BSD 9.9.

024-924 M Toner Empty RAP

BSD-ON:BSD 9.9 - Toner Cartridge Life Control (Y, M)

NOTE: *The chain/link fault code for this RAP is an internal machine code and is never displayed or logged in Fault Code History. Use this RAP to troubleshoot persistent machine status conditions that cannot be cleared by performing the indicated process (e.g., loading paper, closing a cover, replacing a CRU, etc). Entry to this RAP is usually via the Machine Status Faults RAP located in the Other Faults section, or a chain/link listing on a BSD.*

The Magenta Toner Cartridge is empty. This fault requires service only if the message appears before the Toner Cartridge is actually depleted.

NOTE: *Continuous running of high density prints can temporarily deplete the toner supply.*

Initial Actions

- Ensure that there is toner and the toner is evenly distributed in the Magenta cartridge.
- Check the Magenta ATC Sensor for blockage or contaminants.
- Check the drive system from the Developer Drive Motor to the Magenta Developer Housing for damage.

Procedure

- Replace the Toner Cartridge. If the problem continues, perform the following:
- Ensure that the customer is programming a job within the parameters of the machine utilizing the UI.
- Disconnect then reconnect the connectors to the IIT, UI I/F, SBC, MCU all PWBs and components connected to them (RAM, Firmware module, EEPROM)
- Check the sw version of the controller sw - update if required using GP 9.
- Replace MCU PWB (PL 18.1)
- Replace the Hard Drive ([PL 35.2])
- Replace SBC PWB (PL 35.2) (If changing the PWBs does not fix the problem, reinstall the original SBC & MCU)
- Check the circuits using BSD 9.9.

024-925 C Toner Empty RAP

BSD-ON:BSD 9.10 - Toner Cartridge Life ControL (C, K)

NOTE: *The chain/link fault code for this RAP is an internal machine code and is never displayed or logged in Fault Code History. Use this RAP to troubleshoot persistent machine status conditions that cannot be cleared by performing the indicated process (e.g., loading paper, closing a cover, replacing a CRU, etc). Entry to this RAP is usually via the Machine Status Faults RAP located in the Other Faults section, or a chain/link listing on a BSD.*

The Cyan Toner Cartridge is empty. This fault requires service only if the message appears before the Toner Cartridge is actually depleted.

NOTE: *Continuous running of high density prints can temporarily deplete the toner supply.*

Initial Actions

- Ensure that there is toner and the toner is evenly distributed in the cartridge (C).
- Check the Cyan ATC Sensor for blockage or contaminants.
- Check the drive system from the Developer Drive Motor to the Developer Housing (C) for damage.

Procedure

- Replace the Toner Cartridge. If the problem continues, perform the following:
- Ensure that the customer is programming a job within the parameters of the machine utilizing the UI.
- Disconnect then reconnect the connectors to the IIT, UI I/F, SBC, MCU all PWBs and components connected to them (RAM, Firmware module, EEPROM)
- Check the sw version of the controller sw - update if required using GP 9.
- Replace MCU PWB (PL 18.1)
- Replace the Hard Drive ([PL 35.2])
- Replace SBC PWB (PL 35.2) (If changing the PWBs does not fix the problem, reinstall the original SBC & MCU)
- Check the circuits using BSD 9.10.

341-310 IM Logic Fail

BSD-ON:BSD 3.1 - SBC - MCU Communication

The IM (Image Management) software control error was detected.

NOTE: *When turning the power OFF, turn OFF the power switch first and then the main power switch.*

Procedure

1. Turn the power OFF and ON.
2. Install the correct version of the IOT firmware.
3. Initialize the IOT NVM dC301. If the problem persists, replace the MCU PWB (PL 18.1).

341-324 MCU PWB F1 Open

BSD-ON:BSD 1.9 - Power Interlock Switching (2 of 2)

BSD-ON:BSD 9.11 - Toner Dispense Control

Fuse 1 on the MCU PWB has blown.

NOTE: *Remove the cause of Fuse meltdown before replacing the MCU PWB.*

When turning the power OFF, turn OFF the power switch first and then the main power switch.

CAUTION

Chip fuses on the MCU PWB seldom fail because of an internal MCU problem. The cause is almost always a short circuit in the wiring or components fed by the fuse. You MUST determine the source of the short before replacing the MCU PWB.

Procedure

1. Toner Dispense Motor (Y,M) for revolution failure: dC330 [093-001/093-002] (PL 5.1)
2. Toner Dispense Motor (C,K) for revolution failure: dC330 [093-003/093-004] (PL 5.1)
3. Check the Toner Dispense Motor (Y,M,C,K) **+24VDC Wirenet (2 of 2)** (PL 5.1) circuits for overcurrent and overvoltage, and then replace the faulty parts or repair the circuits.
4. Turn the power OFF and replace the MCU PWB (PL 18.1).

341-325 MCU PWB F2 Open

BSD-ON:BSD 1.9 - Power Interlock Switching (2 of 2)

BSD-ON:BSD 1.7 - DC Power Distribution (Options)

Fuse 2 on the MCU PWB has blown.

NOTE: *Remove the cause of Fuse meltdown before replacing the MCU PWB.*

When turning the power OFF, turn OFF the power switch first and then the main power switch.

CAUTION

Chip fuses on the MCU PWB seldom fail because of an internal MCU problem. The cause is almost always a short circuit in the wiring or components fed by the fuse. You MUST determine the source of the short before replacing the MCU PWB.

Procedure

1. Check the Tray Module PWB (PL 10.7) circuit **+24VDC Wirenet (2 of 2)** for overcurrent and overvoltage, and then replace the faulty parts or repair the circuits.
2. Turn the power OFF and replace the MCU PWB (PL 18.1).

341-326 MCU PWB F3 Open

BSD-ON:BSD 1.9 - Power Interlock Switching (2 of 2)

BSD-ON:BSD 10.7 - Fused Paper Exit 2

Fuse 3 on the MCU PWB has blown.

NOTE: *Remove the cause of Fuse meltdown before replacing the MCU PWB.*

When turning the power OFF, turn OFF the power switch first and then the main power switch.

CAUTION

Chip fuses on the MCU PWB seldom fail because of an internal MCU problem. The cause is almost always a short circuit in the wiring or components fed by the fuse. You MUST determine the source of the short before replacing the MCU PWB.

Procedure

1. Exit 2 Motor for revolution failure: dC330 [077-015] (PL 17.3)
2. Check the Exit 2 Motor (PL 17.3) circuit for overcurrent and overvoltage, and then replace the faulty parts or repair the circuits.
3. Turn the power OFF and replace the MCU PWB (PL 18.1).

341-327 MCU PWB F4 Open

BSD-ON:BSD 1.9 - Power Interlock Switching (2 of 2)

BSD-ON:BSD 6.9 - ROS Laser Control (2 of 2)

Fuse 4 on the MCU PWB has blown.

NOTE: *Remove the cause of Fuse meltdown before replacing the MCU PWB.*

When turning the power OFF, turn OFF the power switch first and then the main power switch.

CAUTION

Chip fuses on the MCU PWB seldom fail because of an internal MCU problem. The cause is almost always a short circuit in the wiring or components fed by the fuse. You MUST determine the source of the short before replacing the MCU PWB.

Procedure

1. Go to +3.3VDC Wirenet for +3.3 VDC and BSD 1.9 - Power Interlock Switching (2 of 2) for INTLK +24 VDC. Check the ROS Assembly (PL 2.1) circuit for overcurrent and overvoltage, and then replace the faulty parts or repair the circuits.
2. Turn the power OFF and replace the MCU PWB (PL 18.1).

341-328 MCU PWB F5 Open

BSD-ON:BSD 1.9 - Power Interlock Switching (2 of 2)

BSD-ON:BSD 1.3 - LVPS Control

BSD-ON:, BSD 9.6 - Development (YMC) 1 of 2

BSD-ON:, BSD 9.5 - Charging & Exposure

BSD-ON:BSD 9.16 - Image Transfer to Pape

BSD-ON:BSD 9.19 - Transfer Belt Cleaning

Fuse 5 on the MCU PWB has blown.

NOTE: *Remove the cause of Fuse meltdown before replacing the MCU PWB.*

When turning the power OFF, turn OFF the power switch first and then the main power switch.

CAUTION

Chip fuses on the MCU PWB seldom fail because of an internal MCU problem. The cause is almost always a short circuit in the wiring or components fed by the fuse. You MUST determine the source of the short before replacing the MCU PWB.

Procedure

1. Check the following parts circuits **+24VDC Wirenet (2 of 2)** for overcurrent and overvoltage, and then replace the faulty parts or repair the circuits.
   - LV Rear Intake Fan (PL 4.1). Go to 342-313 LV Rear Intake Fan Fail RAP
   - HVPS (PL 18.1). Check the connection between the HVPS P/J520-6 and the MCU PWB P/J410-A7 for open circuit, short circuit, and poor contact.
2. Turn the power OFF and replace the MCU PWB (PL 18.1).

341-329 MCU PWB F6 Open

BSD-ON:BSD 1.9 - Power Interlock Switching (2 of 2)

BSD-ON:BSD 8.1 - Tray 1, 2, MSI Paper Transportation

BSD-ON:BSD 10.6 - Fused Paper Exit 1 OCT Control

BSD-ON:BSD 10.8 - Duplex Transportation

Fuse 6 on the MCU PWB has blown.

NOTE: *Remove the cause of Fuse meltdown before replacing the MCU PWB.*

When turning the power OFF, turn OFF the power switch first and then the main power switch.

CAUTION

Chip fuses on the MCU PWB seldom fail because of an internal MCU problem. The cause is almost always a short circuit in the wiring or components fed by the fuse. You MUST determine the source of the short before replacing the MCU PWB.

Procedure

1. Check the following parts circuits **+24VDC Wirenet (2 of 2)** for overcurrent and overvoltage, and then replace the faulty parts or repair the circuits.
   - Exit 1 OCT Motor (PL 17.1). Go to the 347-211 Exit 1 OCT Home Fail RAP
   - MSI Feed Solenoid (PL 13.2). MSI Feed Solenoid for failure: dC330 [075-001] (PL 13.2)
   - Duplex Clutch (PL 14.5). dC330 [077-003] (Duplex Clutch).
2. Turn the power OFF and replace the MCU PWB (PL 18.1).

341-330 MCU PWB F7 Open

BSD-ON:BSD 1.9 - Power Interlock Switching (2 of 2)

BSD-ON:BSD 8.4 - Registration

BSD-ON:BSD 10.5 - Fusing

BSD-ON:BSD 10.7 - Fused Paper Exit 2

Fuse 7 on the MCU PWB has blown.

NOTE: *Remove the cause of Fuse meltdown before replacing the MCU PWB.*

When turning the power OFF, turn OFF the power switch first and then the main power switch.

CAUTION

Chip fuses on the MCU PWB seldom fail because of an internal MCU problem. The cause is almost always a short circuit in the wiring or components fed by the fuse. You MUST determine the source of the short before replacing the MCU PWB.

Procedure

1. Check the following parts circuits **+24VDC Wirenet (2 of 2)** for overcurrent and overvoltage, and then replace the faulty parts or repair the circuits.
   - Fuser Exhaust Fan (PL 4.1). Go to the 342-330 Fuser Exhaust Fan Fail RAP.
   - Exit Gate Solenoid (PL 17.4). Exit Gate Solenoid for failure: dC330 [077-004] (PL 17.4)
   - Registration Clutch (PL 15.2). dC330 [077-002] (Registration Clutch
2. Turn the power OFF and replace the MCU PWB (PL 18.1).

341-331 MCU PWB F8 Open

BSD-ON:BSD 1.9 - Power Interlock Switching (2 of 2)

BSD-ON:BSD 9.13 - Color Registration Control

BSD-ON:BSD 8.1 - Tray 1, 2, MSI Paper Transportation

BSD-ON:BSD 9.12 - ADC & Environment Sensing

BSD-ON:BSD 9.13 - Color Registration Control

Fuse 8 on the MCU PWB has blown.

NOTE: *Remove the cause of Fuse meltdown before replacing the MCU PWB.*

When turning the power OFF, turn OFF the power switch first and then the main power switch.

CAUTION

Chip fuses on the MCU PWB seldom fail because of an internal MCU problem. The cause is almost always a short circuit in the wiring or components fed by the fuse. You MUST determine the source of the short before replacing the MCU PWB.

Procedure

1. Check the following parts circuits **+24VDC Wirenet (2 of 2)** for overcurrent and overvoltage, and then replace the faulty parts or repair the circuits.
   - MOB ADC Shutter Solenoid (PL 18.2). MOB ADC Shutter Solenoid for failure: dC330 [092-003] (Open), dC330 [092-004] (Close) (PL 18.2).
   - Developer K Clutch (PL 3.3). dC330 [042-010] (Developer K Clutch).
   - Drum Clutch (PL 3.3). Drum Clutch for failure: dC330 [042-011] (PL 3.3).
   - Takeaway Clutch (PL 15.1). dC330 [077-001] (Takeaway Clutch).
2. Turn the power OFF and replace the MCU PWB (PL 18.1).

341-332 MCU PWB F9 Open

BSD-ON:BSD 1.9 - Power Interlock Switching (2 of 2)

BSD-ON:BSD 1.5 - DC Power Generation (2 of 2)

BSD-ON:BSD 1.7 - DC Power Distribution (Options)

Fuse 9 on the MCU PWB has blown.

NOTE: *Remove the cause of Fuse meltdown before replacing the MCU PWB.*

When turning the power OFF, turn OFF the power switch first and then the main power switch.

CAUTION

Chip fuses on the MCU PWB seldom fail because of an internal MCU problem. The cause is almost always a short circuit in the wiring or components fed by the fuse. You MUST determine the source of the short before replacing the MCU PWB.

Procedure

1. Go to RAP 347-310 Finisher Communication Fault.
2. Check the Finisher circuit **+24VDC Wirenet (1 of 2)** for overcurrent and overvoltage, and then replace the faulty parts or repair the circuits.

   NOTE: *For more information on the connection to the Finisher, refer to the Finisher Supplementary Service Manual.*

3. Turn the power OFF and replace the MCU PWB (PL 18.1).

341-334 MCU PWB F11 Open

BSD-ON:BSD 1.9 - Power Interlock Switching (2 of 2)

BSD-ON:BSD 7.6 - Tray 1 Paper Stacking

Fuse 11 on the MCU PWB has blown.

NOTE: *Remove the cause of Fuse meltdown before replacing the MCU PWB.*

When turning the power OFF, turn OFF the power switch first and then the main power switch.

CAUTION

Chip fuses on the MCU PWB seldom fail because of an internal MCU problem. The cause is almost always a short circuit in the wiring or components fed by the fuse. You MUST determine the source of the short before replacing the MCU PWB.

Procedure

1. Check the Tray 1 Feed/Lift Motor (PL 9.6) circuit for overcurrent and overvoltage, and then replace the faulty parts or repair the circuits. Tray 1 Feed/Lift Motor for revolution failure: dC330 [071-001] (PL 9.6)
2. Turn the power OFF and replace the MCU PWB (PL 18.1).

341-335 MCU PWB F12 Open

BSD-ON:BSD 1.9 - Power Interlock Switching (2 of 2)

BSD-ON:BSD 7.7 - Tray 2 Paper Stacking

Fuse 12 on the MCU PWB has blown.

NOTE: *Remove the cause of Fuse meltdown before replacing the MCU PWB.*

When turning the power OFF, turn OFF the power switch first and then the main power switch.

CAUTION

Chip fuses on the MCU PWB seldom fail because of an internal MCU problem. The cause is almost always a short circuit in the wiring or components fed by the fuse. You MUST determine the source of the short before replacing the MCU PWB.

Procedure

1. Check the Tray 2 Feed/Lift Motor (PL 9.6) circuit for overcurrent and overvoltage, and then replace the faulty parts or repair the circuits. dC330 [072-001] (Tray 2 Feed/Lift Motor).
2. Turn the power OFF and replace the MCU PWB (PL 18.1).

341-340 MCU NVM (EEPROM) Data Fail

BSD-ON:BSD 3.1 - SBC - MCU Communication

The specific values of the NVM (EEPROM) data are not in their specified addresses.

NOTE: *When turning the power OFF, turn OFF the power switch first and then the main power switch.*

Procedure

1. Turn the power OFF and ON.
2. Install the correct version of the IOT firmware.
3. Initialize the IOT NVM using dC301. If the problem persists, replace the MCU PWB (PL 18.1).

341-341 MCU NVM (EEPROM) Access Fail

BSD-ON:BSD 3.1 - SBC - MCU Communication

NVM (EEPROM) access error (The read values are different from those that were written, or there is I2C communication error).

NOTE: *When turning the power OFF, turn OFF the power switch first and then the main power switch.*

Procedure

1. Turn the power OFF and ON.
2. Turn the power OFF and check whether there is poor connection between the EEPROM and the MCU PWB.
3. If no problems are found, replace the MCU PWB (PL 18.1).

341-342 MCU NVM (EEPROM) Buffer Fail

BSD-ON:BSD 3.1 - SBC - MCU Communication

NVM (EEPROM) buffer fail (The write buffer has overflowed).

NOTE: *When turning the power OFF, turn OFF the power switch first and then the main power switch.*

Procedure

1. Turn the power OFF and ON.
2. Turn the power OFF and check whether there is poor connection between the EEPROM and the MCU PWB.
3. If no problems are found, replace the MCU PWB (PL 18.1).

341-347 Serial I/O Fail

BSD-ON:BSD 3.1 - SBC - MCU Communication

The Serial I/O control clock is not input from the MCU PWB FPGA (Field-Programmable Gate Array) to the CPLD (Complex Programmable Logic Device).

NOTE: *When turning the power OFF, turn OFF the power switch first and then the main power switch.*

CAUTION

Chip fuses on the MCU PWB seldom fail because of an internal MCU problem. The cause is almost always a short circuit in the wiring or components fed by the fuse. You MUST determine the source of the short before replacing the MCU PWB.

Procedure

1. Turn the power OFF and ON.
2. Turn the power OFF and check whether there is any foreign substances or improper soldering at the FPGA (Field-Programmable Gate Array) and CPLD (Complex Programmable Logic Device) pins on the MCU PWB.
3. If no problems are found, replace the MCU PWB (PL 18.1).

342-313 LV Rear Intake Fan Fail

BSD-ON:BSD 1.3 - LVPS Control

An abnormality was detected in the LV Rear Intake Fan.

NOTE: *When turning the power OFF, turn OFF the power switch first and then the main power switch.*

Procedure

Check dC122. **Has 041-328 MCU PWB F5 Open occurred?**

Y N

Turn ON dC330 [042-015] (LV Rear Intake Fan). **Can the operation noise of the LV Rear Intake Fan be heard?**

Y N

Remove the Rear Lower Cover. **When the Diag is turned ON, is the voltage between the MCU PWB P/J412-4 (+) and the GND (-) +24VDC?**

Y N

Turn the power OFF and replace the MCU PWB (PL 18.1).

Turn the power OFF and check the connection between the LV Rear Intake Fan P/J216 and the MCU PWB P/J412 for open circuit, short circuit, and poor contact.
If no problems are found, replace the following parts in sequence:

- LV Rear Intake Fan (PL 4.1)
- MCU PWB (PL 18.1)

Press the **Stop** button and turn the power OFF. Check the connection between the LV Rear Intake Fan P/J216-2 and the MCU PWB P/J412-5 for open circuit, short circuit, and poor contact.
If no problems are found, replace the MCU PWB (PL 18.1).

Turn the power OFF and check whether the F5 on the MCU PWB has melted down

342-323 Drum Motor Fail

BSD-ON:BSD 9.1 - Drum/IBT Drive Control

Drum/IBT Drive Motor revolution failure was detected.

NOTE: *When turning the power OFF, turn OFF the power switch first and then the main power switch.*

Procedure

Turn the power OFF and remove the Front Cover. Remove the Drum Cartridge Y,M,C,K) and the IBT Unit and cheat the Front Cover Interlock Switch.
Turn the power ON and enter the Diag mode. Turn ON dC330 [042-001] (Drum/IBT Drive Motor). **Does the Drum/IBT Drive Motor rotate?**

Y N

Turn the power OFF and remove the Rear Lower Cover. Turn the power ON. **Is the voltage between the MCU PWB P/J409-4 (+) and the GND (-) +24VDC?**

Y N

Go to the +24VDC Power RAP.

Is the voltage between the MCU PWB P/J404-8 (+) and the GND (-) +5VDC?

Y N

Go to the +5VDC Power RAP.

Turn the power OFF and check the connections between the MCU PWB P/J404 and the Drum/IBT Drive Motor P/J202, as well as between the MCU PWB P/J409 and the Drum/IBT Drive Motor P/J201 for open circuits, short circuits, and poor contacts.
If no problems are found, replace the following parts in sequence:

- Drum/IBT Drive Motor (PL 3.1)
- MCU PWB (PL 18.1)

Press the **Stop** button and turn the power OFF. Install the Drum Cartridge Y,M,C,K), the IBT Unit, and the Front Cover.
Turn the power ON and enter the Diag mode. Turn ON dC330 [042-001] (Drum/IBT Drive Motor). **Does the Drum/IBT Drive Motor rotate?**

Y N

Check the Drum Cartridge Y,M,C,K) and the IBT Drive for loading. Also, check the IBT for loading due to blockage in the IBT Waste Toner Collection Auger

Press the **Stop** button and turn the power OFF. Check the connection between the Drum/IBT Drive Motor P/J202-8 and the MCU PWB P/J404-1 for open circuit, short circuit, and poor contact.
If no problems are found, replace the MCU PWB (PL 18.1).

342-325 Main Motor Fail

BSD-ON:BSD 4.1 - Main Drive Control

BSD-ON:BSD 8.1 - Tray 1, 2, MSI Paper Transportation

BSD-ON:BSD 8.4 - Registration

BSD-ON:BSD 9.2 - Developer Drive Control

BSD-ON:BSD 9.14 - 1ST BTR Contact Retract Control

BSD-ON:BSD 10.8 - Duplex Transportation

The Main Drive Motor revolution failure was detected.

NOTE: *When turning the power OFF, turn OFF the power switch first and then the main power switch.*

Procedure

Turn the power ON and enter the Diag mode. Turn ON dC330 [042-006] (Main Drive Motor) **Is the Main Drive Motor heard operating?**

Y N

Turn the power OFF and remove the Rear Lower Cover. Turn the power ON. **Is the voltage between the MCU PWB P/J409-2 (+) and the GND (-) +24VDC?**

Y N

Go to the +24VDC Power RAP.

Is the voltage between the MCU PWB P/J407-B8 (+) and the GND (-) +5VDC?

Y N

Go to the +5VDC Power RAP.

Check the following:

- The connection between the MCU PWB P/J409 and the Main Drive Motor P/J208 as well as between the MCU PWB P/J407 and the Main Drive Motor P/J209 for open circuit, short circuit, and poor contact
- The MSI Feed Roll for loading and the Drive Gear for revolution failure or damage
- The Waste Toner Collection Path for loading and the Drive Gear for revolution failure or damage

If no problems are found, replace the following parts in sequence:

- Main Drive Motor (PL 3.3)
- MCU PWB (PL 18.1)

Press the **Stop** button. Turn ON dC330 [042-006] (Main Drive Motor), then turn ON dC330 [042-010] (Developer K Clutch) **Is the Main Drive Motor heard operating?**

Y N

Check the Developer (K) for loading and the Drive Gear for revolution failure or damage

Press the **Stop** button. Turn ON dC330 [094-003] (1st BTR YMC Contact) **Is the Main Drive Motor heard operating?**

Y N

Check the 1st BTR for any load, the Drive Gear for a revolution failure or damage, and the Drum Coupling Contact/Retract part for any load and binding.

Press the **Stop** button. Turn ON dC330 [042-006] (Main Drive Motor), then turn ON dC330 [077-001] (Takeaway Clutch) **Is the Main Drive Motor heard operating?**

Y N

Check the MSI Takeaway Roll and the Tray 1/2 Takeaway Roll for loading and the Drive Gear for revolution failure or damage

Press the **Stop** button. Turn ON dC330 [042-006] (Main Drive Motor), then turn ON dC330 [077-002] (Registration Clutch) **Is the Main Drive Motor heard operating?**

Y N

Check the Registration Roll for loading and the Drive Gear for revolution failure or damage

Press the **Stop** button. Turn ON dC330 [042-006] (Main Drive Motor), then turn ON dC330 [077-003] (Duplex Clutch) **Is the Main Drive Motor heard operating?**

Y N

Check the Duplex Roll for loading and the Drive Gear for revolution failure or damage

Press the **Stop** button and turn the power OFF. Check the connection between the Main Drive Motor P/J209-8 and the MCU PWB P/J407-B1 for open circuit, short circuit, and poor contact. If no problems are found, replace the MCU PWB (PL 18.1).

342-330 Fuser Exhaust Fan Fail

BSD-ON:BSD 10.5 - Fusing

The Fuser Exhaust Fan error was detected.

NOTE: *When turning the power OFF, turn OFF the power switch first and then the main power switch.*

Procedure

Turn the power ON and enter dC122. **Has 041-330 MCU PWB F7 Open occurred?**

Y **N**

Turn the power OFF. Remove the Rear Upper Cover and the Rear Lower Cover. Rotate the Fuser Exhaust Fan by hand to check for an excessive load.

Turn the power ON and enter the Diag mode. Turn ON dC330 [042-014] (Fuser Exhaust Fan). **Is the Fuser Exhaust Fan rotating?**

Y **N**

When the Diag is turned ON, is the voltage between the MCU PWB P/J408-A1 (+) and the GND (-) +24VDC?

Y **N**

Turn the power OFF and replace the MCU PWB (PL 18.1).

Turn the power OFF and check the connection between the Fuser Exhaust Fan P/J210 and the MCU PWB P/J408 for open circuit, short circuit, and poor contact.

If no problems are found, replace the following parts in sequence:

- Fuser Exhaust Fan (PL 4.1)
- MCU PWB (PL 18.1)

Press the **Stop** button and turn the power OFF. Check the connection between the Fuser Exhaust Fan P/J210-2 and the MCU PWB P/J408-A2 for open circuit, short circuit, and poor contact.

If no problems are found, replace the MCU PWB (PL 18.1).

Turn the power OFF and check whether the F7 on the MCU PWB has melted down.

342-337 NOHAD Logic Fail

BSD-ON:BSD 3.1 - SBC - MCU Communication

A fatal error was detected in NOHAD control.

NOTE: *When turning the power OFF, turn OFF the power switch first and then the main power switch.*

Procedure

1. Turn the power OFF and ON.
2. Install the correct version of the MCU software. If the problem persists, replace the MCU PWB (PL 18.1).

342-345 Drum Coupling Contact/Retract Fail

BSD-ON:BSD 9.14 - 1ST BTR Contact Retract Control

BSD-ON:BSD 4.1 - Main Drive Control

An abnormality was detected in the Drum Coupling Contact/Retract.

NOTE: *When turning the power OFF, turn OFF the power switch first and then the main power switch.*

Initial Actions

If the drum drive assembly was just replaced. Remove the xerographic modules and ensure that all the drum drive couplers are visible in the drum drive sockets. If they are not use a screwdriver to align the drum drive coupler in the socket.

Procedure

Check the following:

- The Transfer Belt Unit for mechanical loading or damage
- 1st BTR Contact/Retract operation: dC330 [094-003] (Contact), dC330 [094-004] (Retract)
- The Drum Coupling Contact/Retract for loading and drag.
- Check the wire between FC Drum Sensor P/J117 and MCU PWB P/J412 for an open wire, a short circuit or poor contact.
- Check the wire between K Drum Sensor P/J115 and MCU PWB P/J408 for an open wire, a short circuit or poor contact.
- FC Drum Sensor: dC330 [042-101] (PL 3.1)
- K Drum Sensor: dC330 [042-102] (PL 3.1)
- The Drum Clutch for failure: dC330 [042-011] (PL 3.3)
- The 1st BTR Contact/Retract Gear for wear, damage, and operation failure
- The Main Drive Motor for revolution failure: dC330 [042-006] (PL 3.3)

342-346 Drive Logic Fail

BSD-ON:BSD 3.1 - SBC - MCU Communication

A fatal error was detected in Drive control.

NOTE: *When turning the power OFF, turn OFF the power switch first and then the main power switch.*

Procedure

1. Turn the power OFF and ON.
2. Initialize the IOT NVM dC301. Install the correct version of the IOT firmware.
3. If the problem persists, replace the MCU PWB (PL 18.1).

345-310 Image Ready NG

BSD-ON:BSD 3.1 - SBC - MCU Communication

A Controller image preparation failure was detected.

NOTE: *When turning the power OFF, turn OFF the power switch first and then the main power switch.*

Procedure

1. Turn the power OFF and ON.
2. Turn the power OFF and check whether there is poor connection or foreign substances at the following connectors.
   - Between the SBC PWB P/J320 and the MCU PWB P/J402
   - Between the SBC PWB P/J1323 and the MCU PWB P/J403

   If no problems are found, replace the following parts in sequence:
   - Check the sw version of the controller sw - update if required
   - MCU PWB (PL 18.1)
   - Replace the Hard Drive ([PL 35.2])
   - SBC PWB (PL 35.2)

345-311 Controller Communication Fail

BSD-ON:BSD 3.1 - SBC - MCU Communication

Communication error between SBC PWB and MCU PWB was detected.

NOTE: *When turning the power OFF, turn OFF the power switch first and then the main power switch.*

Procedure

1. Turn the power OFF and ON.
2. Turn the power OFF and check whether there is poor connection or foreign substances at the following connectors.
   - Between the SBC PWB P/J320 and the MCU PWB P/J402
   - Between the SBC PWB P/J1323 and the MCU PWB P/J403

   If no problems are found, replace the following parts in sequence:
   - Check the sw version of the controller sw - update if required
   - MCU PWB (PL 18.1)
   - Replace the Hard Drive ([PL 35.2])
   - SBC PWB (PL 35.2)

345-313 ENG_LOGIC_FAIL

BSD-ON:BSD 3.1 - SBC - MCU Communication

ENGINE internal mismatch (control logic mismatch)

NOTE: *When turning the power OFF, turn OFF the power switch first and then the main power switch.*

Procedure

1. Turn the power OFF and ON.
2. Initialize the IOT NVM using dC301. Install the correct version of the IOT firmware GP 9.
3. If the problem persists, replace the MCU PWB (PL 18.1).

345-321 MK_Panel_NG

BSD-ON:BSD 3.1 - SBC - MCU Communication

Communication error between IM and MK sw functions (when receiving Pitch Check, the corresponding Panel Build is not received)

NOTE: *When turning the power OFF, turn OFF the power switch first and then the main power switch.*

Procedure

1. Turn the power OFF and ON.
2. Initialize the IOT NVM using dC301. Install the correct version of the IOT firmware GP 9.
3. If the problem persists, replace the MCU PWB (PL 18.1).

345-322 MK_Pitch_NG

BSD-ON:BSD 3.1 - SBC - MCU Communication

Communication error between IM and MK sw functions (when receiving Pitch Notify, the corresponding Pitch Check is not received)

NOTE: *When turning the power OFF, turn OFF the power switch first and then the main power switch.*

Procedure

1. Turn the power OFF and ON.
2. Initialize the IOT NVM dC301. Install the correct version of the IOT firmware GP 9.
3. If the problem persists, replace the MCU PWB (PL 18.1).

345-331 MK_MKIF_MSG_Reject

BSD-ON:BSD 3.1 - SBC - MCU Communication

Communication error between IM and MK sw functions (the received message was rejected)

NOTE: *When turning the power OFF, turn OFF the power switch first and then the main power switch.*

Procedure

1. Turn the power OFF and ON.
2. Initialize the IOT NVM using dC301. Install the correct version of the IOT firmware GP 9.
3. If the problem persists, replace the MCU PWB (PL 18.1).

345-332 MK_MMIF_MSG_Reject

BSD-ON:BSD 3.1 - SBC - MCU Communication

Communication error between MM and Sub Module (the received message was rejected)

NOTE: *When turning the power OFF, turn OFF the power switch first and then the main power switch.*

Procedure

1. Turn the power OFF and ON.
2. Initialize the IOT NVM using dC301. Install the correct version of the IOT firmware GP 9.
3. If the problem persists, replace the MCU PWB (PL 18.1).

345-350 MK_Emergency_Over_Wait

BSD-ON:BSD 3.1 - SBC - MCU Communication

MK internal mismatch (panel creation is obstructed continuously over the predetermined time)

NOTE: *When turning the power OFF, turn OFF the power switch first and then the main power switch.*

Procedure

1. Turn the power OFF and ON.
2. Initialize the IOT NVM using dC301. Install the correct version of the IOT firmware GP 9.
3. If the problem persists, replace the MCU PWB (PL 18.1).

345-351 MK_Emergency_No_Timer

BSD-ON:BSD 3.1 - SBC - MCU Communication

MK sw function internal mismatch (Call Back Timer has run out and can't be controlled)

NOTE: *When turning the power OFF, turn OFF the power switch first and then the main power switch.*

Procedure

1. Install the correct version of the IOT firmware GP 9.
2. Turn the power OFF and ON.
3. Initialize the IOT NVM using dC301. If the problem persists, replace the MCU PWB (PL 18.1).

345-352 MK_Emergency_Enforced_Stop

BSD-ON:BSD 3.1 - SBC - MCU Communication

MK sw function internal mismatch (the MM has performed a forced stop process)

NOTE: *When turning the power OFF, turn OFF the power switch first and then the main power switch.*

Procedure

1. Install the correct version of the IOT firmware GP 9.
2. Turn the power OFF and ON.
3. Initialize the IOT NVM using dC301. If the problem persists, replace the MCU PWB (PL 18.1).

347-211 Exit 1 OCT Home Fail

BSD-ON:BSD 10.6 - Fused Paper Exit 1 OCT Control

After the Exit 1 OCT Motor has run for the specified operation time, the Exit 1 OCT Home Position Sensor does not turn ON.

NOTE: *When turning the power OFF, turn OFF the power switch first and then the main power switch.*

Initial Actions

- Check the Exit 1 OCT Home Position Sensor for improper installation, contamination, and etc.
- Check the Shielding Board, which blocks the detection section of the Exit 1 OCT Home Position Sensor, for damage and check the OCT Chute for improper installation.

Procedure

Turn the power ON and enter the UI Diagnostic (CSE) Mode.
Turn ON dC330 [077-102] (Exit 1 OCT Home Position Sensor). Move the OCT Chute manually to block/clear the light path to the Exit 1 OCT Home Position Sensor. **Does the display change between High/Low?**

Y N

Use to check the Exit 1 OCT Home Position Sensor (PL 17.1).

Press the **Stop** button. Turn ON dC330 [077-010] and dC330 [077-011] alternately. **Does the OCT 1 Chute move forward and backward?**

Y N

Remove the Rear Lower Cover. **Is the voltage between the MCU PWB P/J415-17/18 (+) and the GND (-) +24VDC?**

Y N

Go to the +24VDC Power RAP.

Turn the power OFF and check the Exit 1 OCT Motor Gear for blockage and theOCT Chute for damage. Also, check the connection between the MCU PWB P/J415 and the Exit 1 OCT Motor P/J222 for open circuit, short circuit, and poor contact.
If no problems are found, replace the following parts in sequence:

- Exit 1 OCT Motor (PL 17.1)
- MCU PWB (PL 18.1)

Press the **Stop** button. Turn the power OFF and replace the MCU PWB (PL 18.1).

347-213 Finisher Type Mismatch

BSD-ON:BSD 3.6 - IOT - Finisher Communication

System detect incorrect finisher type.

NOTE: *When turning the power OFF, turn OFF the Power Switch first and then the Main Power Switch.*

Procedure

Turn the power OFF and connect a Finisher that is supported by this machine.

1. Power up the machine
2. Verify the fault has cleared
3. If the fault has not cleared, go to **BSD 3.6 - IOT - Finisher Communication** and troubleshoot the problem.

347-310 Finisher Communication Fault

BSD-ON:BSD 1.7 - DC Power Distribution (Options)

BSD-ON:BSD 3.6 - IOT - Finisher Communication

BSD-ON:BSD 12.1 Integrated Finisher DC Power and Interlock Switching

BSD-ON: BSD 12.2 Office Finisher LX DC Power Generation

Communication failure between the Finisher and the IOT was detected.

NOTE: *When turning the power OFF, turn OFF the Power Switch first and then the Main Power Switch.*

Procedure

1. Turn the power OFF and ON.
2. Turn the power OFF and check the connection between the MCU PWB and the Finisher PWB for open circuit, short circuit, and poor contact. Also, check the power supply at the Finisher.
3. If no problems are found, replace the MCU PWB (PL 18.1).

347-320 All Destination Tray Broken

All Trays connected to the IOT have become unusable.

Procedure

Enter dC122 Fault History. Go to the RAP of the affected Output Tray.

361-320 Polygon Motor Fail

BSD-ON:BSD 6.9 - ROS Laser Control (2 of 2)

SOS Fail does not change to Undetected within the specified time (10s).

NOTE: *When turning the power OFF, turn OFF the power switch first and then the main power switch.*

Procedure

1. Turn the power OFF and check the following connections for open circuit, short circuit, and poor connection. After the check is complete, turn the power OFF and ON.
   - Polygon Motor for Polygon Motor Ready Signal: dC330 [061-160] (PL 2.1)
   - Between the MCU PWB P/J401 and the LDD PWB LD_P/J401
2. If the problem persists, perform the following in sequence:
   a. Reload the machine software using GP 9.
   b. Replace the ROS (PL 2.1)
   c. Replace the MCU PWB (PL 18.1)

361-334 SOS Fail

BSD-ON:BSD 6.9 - ROS Laser Control (2 of 2)

SOS Fail was detected for the specified time (300ms).

NOTE: *When turning the power OFF, turn OFF the power switch first and then the main power switch.*

Procedure

1. Turn the power OFF and ON.
2. Turn the power OFF and check the following connections for open circuit, short circuit, and poor connection.
   - Between the MCU PWB P/J401 and the LDD PWB LD_P/J401

   If no problems are found, perform the following in sequence:
   - Reload the machine software using GP 9.
   - Replace the ROS (PL 2.1)
   - Replace the MCU PWB (PL 18.1)

361-340 LD Fail

BSD-ON:BSD 6.8 - ROS Laser Control (1 of 2)

LD Fail was detected 5ms after the start of initial APC.

NOTE: *When turning the power OFF, turn OFF the power switch first and then the main power switch.*

Procedure

1. Turn the power OFF and ON.
2. Turn the power OFF and check the connections between the MCU PWB P/J401 and the LDD PWB LD_P/J401, as well as between the MCU PWB P/J425 and the LDD PWB LD_P/J403 for open circuits, short circuits, and poor contacts.

   If no problems are found, perfrom the following in sequence:
   - Reload the machine software using GP 9.
   - Replace the ROS (PL 2.1)
   - Replace the MCU PWB (PL 18.1)

361-607 LD Warning

BSD-ON:BSD 6.8 - ROS Laser Control (1 of 2)

In BW mode, LD Fail was detected 5ms after the start of initial APC.

NOTE: *When turning the power OFF, turn OFF the power switch first and then the main power switch.*

Procedure

1. Turn the power OFF and ON.
2. Turn the power OFF and check the connections between the MCU PWB P/J401 and the LDD PWB LD_P/J401, as well as between the MCU PWB P/J425 and the LDD PWB LD_P/J403 for open circuits, short circuits, and poor contacts.

   If no problems are found, perform the following in sequence:
   - Reload the machine software using GP 9.
   - Replace the ROS (PL 2.1)
   - Replace the MCU PWB (PL 18.1)

362-396 CCD Cable Connection Fail

BSD-ON:BSD 3.3 - SBC - IIT Communication

A CCD Flat Cable connection error was detected.

NOTE: *When turning the power OFF, turn OFF the power switch first and then the main power switch.*

Procedure

1. Turn the power OFF and ON.
2. Turn the power OFF and check the following:
   - Check the Flat Cable between the CCD Lens Assembly P/J700 and the IIT PWB P/J710 for open circuits, short circuits, and poor contacts (especially, check whether the Flat Cable was inserted in a skewed manner).
   - The coaxial cable between the IIT PWB P/J7191 and the SBC PWB P/J336 for open circuit, short circuit, and poor contact

   If no problems are found, perform the following in order:
   - Reload the machine software (GP 9).
   - Replace the IIT PWB (Switch the EEPROM) (PL 1.6)
   - Replace the Hard Drive ([PL 35.2])
   - Replace the SBC PWB (PL 35.2)

362-397 IIT-SBC Video Cable Connection Fail

BSD-ON:BSD 3.3 - SBC - IIT Communication

An SBC Video Cable connection error was detected.

NOTE: *When turning the power OFF, turn OFF the power switch first and then the main power switch.*

Procedure

1. Turn the power OFF and ON.
2. Turn the power OFF and check the coaxial cable between the IIT PWB P/J7191 and the SBC PWB P/J336 for open circuit, short circuit, and poor contact.

   If no problems are found, perform the following in order:
   - Reload the machine software (GP 9).
   - Replace the Hard Drive ([PL 35.2])
   - Replace the SBC PWB (PL 35.2)
   - Replace the IIT PWB (Switch the EEPROM) (PL 1.6)

362-398 IIT-SBC I/O Cable Connection Fail

BSD-ON:BSD 3.3 - SBC - IIT Communication

An SBC I/O Cable connection error was detected.

NOTE: *When turning the power OFF, turn OFF the power switch first and then the main power switch.*

Procedure

1. Turn the power OFF and ON.
2. Turn the power OFF and check the connection between the SBC PWB P/J390 and the IIT PWB P/J7192 for open circuit, short circuit, or poor contact.
3. If no problems are found, perform the following in sequence:
   a. Reload the machine software (GP 9).
   b. Replace the Hard Drive ([PL 35.2])
   c. Replace the SBC PWB (PL 35.2)
   d. Replace the IIT PWB (Switch the EEPROM) (PL 1.6)

362-399 DADF Cable Fail

BSD-ON:BSD 3.5 - SBC - DADF Communication

Communication cannot be established between the SBC PWB and the DADF PWB.

NOTE: *When turning the power OFF, turn OFF the power switch first and then the main power switch.*

Procedure

1. Turn the power OFF and ON.
2. Turn the power OFF and check the following:
   - The connectors of the SBC PWB P/J390 and the IIT PWB P/J7192 for damage, foreign substances, bent connector pins, burns, and improper soldering on the PWB
   - The connection between the IIT PWB P/J7501 and the DADF PWB P/J751 as well as between the IIT PWB P/J7502 and the DADF PWB P/J752 for open circuit, short circuit, and poor contact
   - The connectors of the IIT PWB P/J7501, P/J7502 and the DADF PWB P/J751, P/J752 for damage, foreign substances, bent connector pins, burns, and improper soldering on the PWB
3. If no problems are found, perform the following in sequence:
   a. Reload the machine software (GP 9).
   b. Replace the DADF PWB (PL 51.2)
   c. Replace the Hard Drive ([PL 35.2])
   d. Replace the SBC PWB (PL 35.2)
   e. Replace the IIT PWB (Switch the EEPROM) (PL 1.6)

362-450 to 362-468 IIT Calibration Faults

BSD-ON:BSD 3.3 - SBC - IIT Communication

A fault has occurred during the calibration process. Any of the following fault codes may have appeared. Use this RAP to resolve the problem.

62-450 Dark range status bit is not clear prior to calibration.

62-451 Dark range status bit is not set after calibration.

62-452 Pixel offset status bit is not clear prior to calibration.

62-453 Pixel offset status bit is not set after calibration.

62-454 Gain range status bit is not clear prior to calibration.

62-455 Gain range status bit is not set after calibration.

62-457 Pixel gain status bit is not set after calibration.

62-458 Highest intensity image pixel value exceeds maximum tolerance.

62-459 Pixel offset error (Hi) exceeds maximum adjustment allowed during dark calibration.

62-460 Pixel offset error (Lo) exceeds maximum adjustment allowed during dark calibration.

62-461 Highest intensity image pixel value is lower than the minimum tolerance.

62-462 Pixel gain error (Hi) exceeds maximum adjustment allowed during white calibration.

62-463 Pixel gain error (L0) exceeds maximum adjustment allowed during white calibration.

62-466 Pixels out of range during black calibration.

62-467 Pixels out of range during white calibration.

62-468 Pixel clock error from the full width array.

Initial Actions

Switch off the machine, then switch on the machine.

Procedure

Perform dC609 Document Glass Registration. **The fault is still present.**

Y N

Go to Call Flow.

Check the ribbon cable and connectors P/J700 on the CCD Lens Assembly and P/J710 on the IIT PWB. **The ribbon cable and connectors are clean and undamaged.**

Y N

Clean or repair the ribbon cable or connectors, if necessary install new components (PL 1.2).

Reconnect the P/J700 to P/J710 ribbon cable. Check the data cable and connectors between P/J390 on the SBC PWB and P/J7192 on the IIT PWB. **The data cable and connectors are clean and undamaged.**

Y N

Clean or repair the cable or connectors. Install new components as necessary (PL 1.2)

- SBC PWB/IIT PWB data cable (PL 18.3).
- IIT PWB (Switch the EEPROM) (PL 1.6).

If the fault remains, replace the SBC PWB (PL 35.2).

If the problem continues, perform the following in order:

1. Reload the software using the AltBoot Procedure (GP 9)
2. Replace the IIT PWB (Switch the EEPROM) (PL 1.6)
3. Replace the SBC PWB/IIT Data cable (PL 18.3)
4. Replace the Hard Drive ([PL 35.2])
5. Replace the SBC PWB (PL 35.2).

362-476 Carriage Home Sensor

BSD-ON:BSD 6.1 - Document Illumination

Carriage home sensor is not cleared or made in time.

Initial Actions

Switch off, then switch on the machine.

Procedure

Visually check the scanner carriage alignment through the document glass. **Carriage alignment is good.**

Y N

Perform ADJ 6.2 Full/Half Rate Carriage Position Adjustment.

Enter dC330 [62-024] carriage move to document size position, then cancel the code. Enter dC330 [62-023] carriage to home position, then cancel the code. **The carriage moves to the document size position then returns to the home position.**

Y N

Check the condition and adjustment of the carriage drive cables, refer to REP 6.5 Front/Rear Carriage Cable. **The carriage drive cables are good.**

Y N

Install new carriage drive cables (PL 1.3).

Check the carriage motor. Refer to BSD 3.5 - SBC - DADF Communication

- Go to the OF 99-9 Mulitiple Wire Motor RAP

Install new components as necessary:

- Carriage motor assembly (PL 1.6).
- IIT PWB (Switch the EEPROM) (PL 1.6).

Enter dC330 [62-018] Carriage Home Sensor. Stack codes [62-024] Carriage Move to Document Size Position and [62-023] Carriage Move to Home Position and move the carriage into and out of the home position. **The display changes.**

Y N

Check the IIT Registration Sensor, refer to BSD 3.5 - SBC - DADF Communication:
Go to the OF 99-2 Transmissive Sensor RAP
Replace the following as necessary:

- IIT Registration Sensor (PL 1.6).
- IIT PWB (Switch the EEPROM) (PL 1.6).

Go to Call Flow.

362-481 DADF Client Time Out Fault

BSD-ON:BSD 3.5 - SBC - DADF Communication

Communication cannot be established between the SBC PWB and the DADF PWB.

NOTE: *When turning the power OFF, turn OFF the Power Switch first and then the Main Power Switch.*

Comms status not received from DADF

Procedure

Turn the power OFF and ON.
Enter dC122 and check the Fault History for additional faults. **Fault Code 362-399 is also present.**

Y N

Turn the power OFF and check the following:

- The connection between the IIT PWB P/J7501 and the DADF PWB P/J751 as well as between the IIT PWB P/J7502 and the DADF PWB P/J752 for open circuit, short circuit, and poor contact
- The connectors of the IIT PWB P/J7501, P/J7502 and the DADF PWB P/J751, P/J752 for damage, foreign substances, bent connector pins, burns, and improper soldering on the PWB

If no problems are found, perfrom the following in sequence:

1. Reload the machine software (GP 9).
2. Replace the DADF PWB (PL 51.2)
3. Replace the Hard Drive ([PL 35.2])
4. Replace the SBC PWB (PL 35.2)
5. Replace the IIT PWB (Switch the EEPROM) (PL 1.6)

Go to the 362-399 DADF Cable Fail RAP to troubleshoot.

362-486 Supply 24 Volt Error

BSD-ON:BSD 1.6 - IIT DC Power Distribution

24 volts not detected by the IIT

Procedure

Measure the voltage between P/J720-3 (+) and P/J720-1 (-) on the IIT PWB. **24 VDC is measured.**

Y N

Go to the +24VDC Power RAP and troubleshoot the problem.

Perform the following in sequence:

1. Reload the machine software (GP 9).
2. Replace the IIT PWB (Switch the EEPROM) (PL 1.6)
3. Replace the Hard Drive ([PL 35.2])
4. Replace the SBC PWB (PL 35.2)

362-490 Data Steerer Error

A data steerer error has been found during the transfer of data from the IIT PWB to the SBC PWB.

Procedure

Switch off the machine, then switch on the machine, GP 14. **The fault still remains.**

Y N

The faults returns after less than 1000 copies/prints have been made.

Y N

Go to Call Flow.

Replace the IIT PWB (Switch the EEPROM) (PL 1.6).

Replace the IIT (Switch the EEPROM) PWB (PL 1.6).

362-779 FPGA Not Loaded

FPGA has corrupted image or hasn't been loaded.

Procedure

1. Switch the power off, then on to clear fault.
2. Reload SW using a forced Altboot process (GP 9).
3. If the problem still exists, replace the following in order:
   a. IIT PWB (Switch the EEPROM) (PL 1.6)
   b. Replace the Hard Drive ([PL 35.2])
   c. SBC PWB (PL 35.2)

362-780 FPGA CRC Error

FPGA has corrupted image or hasn't been loaded.

Procedure

1. Switch the power off, then on to clear fault.
2. Reload SW using a forced Altboot process (GP 9).
3. If the problem still exists, replace the following in order:
   a. IIT PWB (Switch the EEPROM) (PL 1.6)
   b. Replace the Hard Drive ([PL 35.2])
   c. SBC PWB (PL 35.2)

366-450 Calibration Dark Range Not Clear

BSD-ON:BSD 3.5 - SBU - DADF Communication

Dark range status bit is not clear prior to calibration.

NOTE: *When turning the power OFF, turn OFF the power switch first and then the main power switch.*

Procedure

Turn the power OFF and ON.

366-451 Calibration Dark Range Not Done

BSD-ON:BSD 3.5 - SBU - DADF Communication

Dark range status bit is not set after calibration.

NOTE: *When turning the power OFF, turn OFF the power switch first and then the main power switch.*

Procedure

Turn the power OFF and ON.

366-452 Calibration Pixel Offset Not Clear

BSD-ON:BSD 3.5 - SBU - DADF Communication

Pixel offest status bit is not clear prior to calibration.

NOTE: *When turning the power OFF, turn OFF the power switch first and then the main power switch.*

Procedure

Turn the power OFF and ON.

366-453 Calibration Pixel Offset Not Done

BSD-ON:BSD 3.5 - SBU - DADF Communication

Pixel offset status bit is not set after calibration.

NOTE: *When turning the power OFF, turn OFF the power switch first and then the main power switch.*

Procedure

Turn the power OFF and ON.

366-454 Calibration Gain Range Not Clear

BSD-ON:BSD 3.5 - SBU - DADF Communication

Gain range status bit is not clear prior to calibration.

NOTE: *When turning the power OFF, turn OFF the power switch first and then the main power switch.*

Procedure

Turn the power OFF and ON.

366-455 Calibration Gain Range Not Done

BSD-ON:BSD 3.5 - SBU - DADF Communication

Gain range status bit is not set after calibration.

NOTE: *When turning the power OFF, turn OFF the power switch first and then the main power switch.*

Procedure

Turn the power OFF and ON.

366-457 Calibration Pixel Gain Not Done

BSD-ON:BSD 3.5 - SBU - DADF Communication

Pixel gain status bit is not set after calibration.

NOTE: *When turning the power OFF, turn OFF the power switch first and then the main power switch.*

Procedure

Turn the power OFF and ON.

366-458 Calibration Dark Range Errors

BSD-ON:BSD 3.5 - SBU - DADF Communication

Highest Intensity image pixel value exceeds maximum tolerance.

NOTE: *When turning the power OFF, turn OFF the power switch first and then the main power switch.*

Procedure

Turn the power OFF and ON.

366-459 Calibration Pixel Offset Hi Errors

BSD-ON:BSD 3.5 - SBU - DADF Communication

Pixel error exceeds maximum adjustment allowed during dark calibration.

NOTE: *When turning the power OFF, turn OFF the power switch first and then the main power switch.*

Procedure

Turn the power OFF and ON.

366-460 Calibration Pixel Offset Lo Errors

BSD-ON:BSD 3.5 - SBU - DADF Communication

Pixel error exceeds maximum adjustment allowed during dark calibration.

NOTE: *When turning the power OFF, turn OFF the power switch first and then the main power switch.*

Procedure

Turn the power OFF and ON.

366-461 Calibration Gain Range Errors

BSD-ON:BSD 3.5 - SBU - DADF Communication

Highest Intensity image pixel value is lower than the minimum tolerance.

NOTE: *When turning the power OFF, turn OFF the power switch first and then the main power switch.*

Procedure

Turn the power OFF and ON.

366-462 Calibration Pixel Gain Hi Errors

BSD-ON:BSD 3.5 - SBU - DADF Communication

Pixel error exceeds maximum adjustment allowed during white calibration.

NOTE: *When turning the power OFF, turn OFF the power switch first and then the main power switch.*

Procedure

Turn the power OFF and ON.

366-463 Calibration Pixel Gain Lo Errors

BSD-ON:BSD 3.5 - SBU - DADF Communication

Pixel error exceeds maximum adjustment allowed during white calibration.

NOTE: *When turning the power OFF, turn OFF the power switch first and then the main power switch.*

Procedure

Turn the power OFF and ON.

366-466 Dark Range Rail Error

BSD-ON:BSD 3.5 - SBU - DADF Communication

Pixels out range during black calibration.

NOTE: *When turning the power OFF, turn OFF the power switch first and then the main power switch.*

Procedure

Turn the power OFF and ON.

366-467 Gain Range Rail Error

BSD-ON:BSD 3.5 - SBU - DADF Communication

Pixels out range during white calibration.

NOTE: *When turning the power OFF, turn OFF the power switch first and then the main power switch.*

Procedure

Turn the power OFF and ON.

366-468 Color State Errors

BSD-ON:BSD 3.5 - SBU - DADF Communication

Pixel clock error from the full width array.

NOTE: *When turning the power OFF, turn OFF the power switch first and then the main power switch.*

Procedure

Turn the power OFF and ON.

366-490 Data Steerer Error - Taurus 2

BSD-ON:BSD 3.5 - SBU - DADF Communication

Data Steerer Error - Taurus 2.

NOTE: *When turning the power OFF, turn OFF the power switch first and then the main power switch.*

Procedure

Turn the power OFF and ON.

366-779 FPGA not loaded (Side 2)

BSD-ON:BSD 3.5 - SBU - DADF Communication

FPGA has corrupted image or hasn't been loaded.

NOTE: *When turning the power OFF, turn OFF the power switch first and then the main power switch.*

Procedure

Reload the FPGA by reloading the IIT SW, by reloading the SBC SW using a forced altboot to force reload (GP 9)

366-780 FPGA CRC Error (Side 2)

BSD-ON:BSD 3.5 - SBU - DADF Communication

FPGA has corrupted image or hasn't been loaded.

NOTE: *When turning the power OFF, turn OFF the power switch first and then the main power switch.*

Procedure

Reload the FPGA by reloading the IIT SW, by reloading the SBC SW using a forced altboot to force reload (GP 9)

371-105 Registration Sensor On Jam (Tray 1)

BSD-ON:BSD 4.1 - Main Drive Control

BSD-ON:BSD 7.6 - Tray 1 Paper Stacking

BSD-ON:BSD 8.1 - Tray 1, 2, MSI Paper Transportation

BSD-ON:BSD 8.4 - Registration

The Registration Sensor does not turn ON within the specified time after the Registration Clutch On after the Feed from Tray 1 has started.

NOTE: *When turning the power OFF, turn OFF the power switch first and then the main power switch.*

Initial Actions

- A paper transportation failure due to a foreign substance/burr on the paper path
- The Tray 1 Feed Roll, Retard Roll, and Nudger Roll for contamination, wear, and revolution failure (when the jam has occurred during Feed from Tray 1)
- The Takeaway Roll and Pinch Roll for contamination, wear, and revolution failure
- The Takeaway Roll Drive Gear for wear and damage
- Use of paper out of spec
- The Registration Sensor for contamination, improper installation, and Actuator operation failure

Procedure

Check the following:

- The Registration Sensor for failure: dC330 [077-104] (PL 15.2)
- The connection between the Registration Sensor P/J105 and the MCU PWB P/J407 for open circuit, short circuit, and poor contact
- The Main Drive Motor for revolution failure: dC330 [042-006] (PL 3.3)
- The Tray 1 Feed/Lift Motor for revolution failure: dC330 [071-001] (PL 9.6) (when the jam has occurred during Feed from Tray 1)
- The Takeaway Clutch for failure: dC330 [077-001] (PL 15.1) (when the jam has occurred during Feed from Tray 1)
- The Registration Transport Assy (PL 15.1) for installation failure

Reload the machine software (GP 9). If no problems are found, replace the MCU PWB (PL 18.1).

371-210 Tray 1 Lift Fail

BSD-ON:BSD 7.6 - Tray 1 Paper Stacking

Tray 1 Lift NG has occurred 3 times in a row.

NOTE: *When turning the power OFF, turn OFF the power switch first and then the main power switch.*

Procedure

Remove Tray 1. Turn the power ON and enter the Diag mode. Turn ON dC330 [071-001] (Tray 1 Feed/Lift Motor). **Does the Tray 1 Feed/Lift Motor rotate?**

Y **N**

Is the voltage between the MCU PWB P/J400-2 (+) and the GND (-) +24VDC?

Y **N**

Go to +24VDC Power.

Turn the power OFF, then measure the Tray 1 Feed/Lift Motor wire wound resistance. Remove the Rear Lower Cover, then measure the following resistances.

- Between the MCU PWB P/J416-1 and P/J416-2
- Between the MCU PWB P/J416-3 and P/J416-4

Is the resistance approx. 4Ohm for each? (When the temperature is 25 °C)

Y **N**

Check the connection between the MCU PWB P/J416 and the Tray 1 Feed/Lift Motor P/J223 for open circuit, short circuit, and poor contact. Measure the resistance between the MCU PWB P/J416-1/2/3/4 and the Frame. **Is the resistance infinite for all?**

Y **N**

Check the wires of the pins with non-infinite resistance for peeled-off coatings and short circuits due to pinching.

Replace the Tray 1 Feed/Lift Motor (PL 9.6).

Replace the MCU PWB (PL 18.1).

Press the **Stop** button. Turn ON dC330 [071-102] (Tray 1 Nudger Level Sensor). Use a sheet of paper, etc. to block/clear the light path to the Tray 1 Nudger Level Sensor. **Does the display change between High/Low?**

Y **N**

Use OF 99-2 RAP to check the Tray 1 Nudger Level Sensor (PL 9.4).

Press the **Stop** button and turn the power OFF.

Perform the following in order;

1. Reload the machine software (GP 9).
2. Check the Tray Lift Gear for damage or the Tray Lift mechanism for mechanical load.
3. If no problems are found, replace the MCU PWB (PL 18.1).

.

371-212 Tray 1 Paper Size Sensor Broken

BSD-ON:BSD 7.1 - Tray 1 Paper Size Sensing

Abnormal output AD value from Tray 1 Size Sensor was detected.

NOTE: *When turning the power OFF, turn OFF the power switch first and then the main power switch.*

Procedure

Check the following:

- Broken link and breakage at the bottom of the tray
- The Actuator at the rear of the Tray for operation failure
- The Tray 1 Paper Size Sensor for failure: dC140 [071-200], dC330 [071-104] (PL 9.1)
- The connection between the Tray 1 Paper Size Sensor P/J118 and the MCU PWB P/J412 for open circuit, short circuit, and poor contact

Reload the machine software (GP 9). If no problems are found, replace the MCU PWB (PL 18.1).

372-101 Tray 2 Misfeed

BSD-ON:BSD 1.9 - Power Interlock Switching (2 of 2)

BSD-ON:BSD 7.7 - Tray 2 Paper Stacking

BSD-ON:BSD 8.1 - Tray 1, 2, MSI Paper Transportation

BSD-ON:BSD 8.3 - Tray Module Paper Transportation (2 of 2)

The Tray 2 Feed Out Sensor does not turn ON within the specified time after the Feed from Tray 2 has started.

NOTE: *When turning the power OFF, turn OFF the power switch first and then the main power switch.*

Procedure

Remove Tray 2. Turn the power ON and enter the Diag mode. Turn ON dC330 [072-001] (Tray 2 Feed/Lift Motor). **Does the Tray 2 Feed/Lift Motor rotate?**

Y N

Is the voltage between the MCU PWB P/J400-2 (+) and the GND (-) +24VDC?

Y N

Go to +24VDC Power.

Turn the power OFF, then measure the Tray 2 Feed/Lift Motor wire wound resistance. Remove the Rear Lower Cover, then measure the following resistances.

- Between the MCU PWB P/J416-5 and P/J416-6
- Between the MCU PWB P/J416-7 and P/J416-8

Is the resistance approx. 4Ohm for each? (When the temperature is 25 °C)

Y N

Check the connection between the MCU PWB P/J416 and the Tray 2 Feed/Lift Motor P/J224 for open circuit, short circuit, and poor contact. If there are no problems, replace the Tray 2 Feed/Lift Motor (PL 9.6).

Measure the resistance between the MCU PWB P/J416-5/6/7/8 and the Frame. **Is the resistance infinite for all?**

Y N

Check the wires of the pins with non-infinite resistance for peeled-off coatings and short circuits due to pinching.

Replace the MCU PWB (PL 18.1).

Press the **Stop** button. Turn ON dC330 [077-001] (Takeaway Clutch) and dC330 [042-006] (Main Drive Motor). **Does the Takeaway Roll 2 rotate?**

Y N

Is the voltage between the MCU PWB P/J213-1 (+) and the GND (-) +24VDC?

Y N

Go to +24VDC Power.

Turn the power OFF and check the connection between the MCU PWB P/J213 and the Takeaway Clutch for open circuit, short circuit, and poor contact. If no problems are found, replace the Takeaway Clutch (PL 15.1).

A

Press the **Stop** button and open the L/H Cover. Turn ON dC330 [072-103] (Tray 2 Feed Out Sensor). Move the Actuator manually to block/clear the light path to the Tray 2 Feed Out Sensor. **Does the display change between High/Low?**

Y N

Use OF 99-2 RAP to check the Tray 2 Feed Out Sensor (PL 15.3).

Press the **Stop** button and turn the power OFF. Check the following:

- A paper transportation failure due to a foreign substance/burr on the paper path
- The Feed Roll, Retard Roll, and Nudger Roll for contamination, wear, and revolution failure
- The Takeaway Roll 2 and Pinch Roll for contamination, wear, and revolution failure
- The Feed Roll, Retard Roll, and Nudger Roll Drive Gears for wear and damage
- The Takeaway Roll 2 Drive Gear for wear and damage
- Use of paper out of spec

Reload the machine software (GP 9). If reloading the sofware does not resolve the problem, replace the MCU PWB (PL 18.1).

A

372-102 Feed Out Sensor 2 On Jam (Tray 1/2)

BSD-ON:BSD 8.1 - Tray 1, 2, MSI Paper Transportation

BSD-ON:BSD 8.3 - Tray Module Paper Transportation (2 of 2)

The Tray 2 Feed Out Sensor does not turn ON within the specified time after the Feed from Tray 3 or Tray 4 has started.

NOTE: *When turning the power OFF, turn OFF the power switch first and then the main power switch.*

Initial Actions

Check the following:

- A paper transportation failure due to a foreign substance/burr on the paper path
- The Take Away Roll 2, 3 or 4 and the Pinch Roll for contamination, wear and a revolution failure
- The Drive Gear of the Take Away Roll 2, 3 or 4 for wear and damage
- Use of paper out of spec
- The Tray 2 Feed Out Sensor for contamination, improper installation, and Actuator operation failure

Procedure

Check the following:

- The Tray 2 Feed Out Sensor for failure: dC330 [072-103] (PL 15.3)
- The connection between the Tray 2 Feed Out Sensor P/J113 and the MCU PWB P/J405 for open circuit, short circuit, and poor contact
- The TM Takeaway Motor for revolution failure: dC330 [077-033] (PL 10.7)
- The Takeaway Clutch for failure: dC330 [077-001] (PL 15.1)
- Go to **+5VDC Wirenet (1 of 4)** and **+5VDC Wirenet (4 of 4)**. Check the connection between the MCU PWB P423 and the Tray Module PWB P/J541 for open circuit, short circuit, and poor contact

If no problems are found, perform the following in sequence:

- Reload the machine software (GP 9).
- Tray Module PWB (PL 10.7)
- MCU PWB (PL 18.1)

372-105 Registration Sensor On Jam (Tray 2)

BSD-ON:BSD 4.1 - Main Drive Control

BSD-ON:, BSD 8.1 - Tray 1, 2, MSI Paper Transportation

BSD-ON:BSD 8.4 - Registration

The Registration Sensor does not turn ON within the specified time after the Registration Clutch On after the Feed from Tray 2 has started.

NOTE: *When turning the power OFF, turn OFF the power switch first and then the main power switch.*

Initial Actions

Check the following:

- A paper transportation failure due to a foreign substance/burr on the paper path
- The Tray 2 Feed Roll, Retard Roll, and Nudger Roll for contamination, wear, and revolution failure (when the jam has occurred during Feed from Tray 2)
- The Takeaway Roll 2 and Pinch Roll for contamination, wear, and revolution failure
- The Takeaway Roll 2 Drive Gear for wear and damage
- The Takeaway Roll and Pinch Roll for contamination, wear, and revolution failure
- The Takeaway Roll Drive Gear for wear and damage
- Use of paper out of spec
- The Registration Sensor for contamination, improper installation, and Actuator operation failure

Procedure

Check the following:

- The Registration Sensor for failure: dC330 [077-104] (PL 15.2)
- The connection between the Registration Sensor P/J105 and the MCU PWB P/J407 for open circuit, short circuit, and poor contact
- The Main Drive Motor for revolution failure: dC330 [042-006] (PL 3.3)
- The Tray 2 Feed/Lift Motor for revolution failure: dC330 [072-001] (PL 9.6) (when the jam has occurred during Feed from Tray 2)
- The Takeaway Clutch for failure: dC330 [077-001] (PL 15.1) (when the jam has occurred during Feed from Tray 2)
- The Registration Transport Assy (PL 15.1) for installation failure

Reload the machine software (GP 9). If no problems are found, replace the MCU PWB (PL 18.1).

372-210 Lift Fail (Tray 2)

BSD-ON:BSD 7.7 - Tray 2 Paper Stacking

Tray 2 Lift NG has occurred 3 times in a row.

NOTE: *When turning the power OFF, turn OFF the power switch first and then the main power switch.*

Procedure

Remove Tray 2. Turn the power ON and enter the Diag mode. Turn ON dC330 [072-001] (Tray 2 Feed/Lift Motor). **Does the Tray 2 Feed/Lift Motor rotate?**

Y N

Is the voltage between the MCU PWB P/J400-2 (+) and the GND (-) +24VDC?

Y N

Go to +24VDC Power.

Turn the power OFF, then measure the Tray 2 Feed/Lift Motor wire wound resistance. Remove the Rear Lower Cover, then measure the following resistances.

- Between the MCU PWB P/J416-5 and P/J416-6
- Between the MCU PWB P/J416-7 and P/J416-8

Is the resistance approx. 4Ohm for each? (When the temperature is 25 °C)

Y N

Check the connection between the MCU PWB P/J416 and the Tray 2 Feed/Lift Motor P/J224 for open circuit, short circuit, and poor contact. If there are no problems, replace the Tray 2 Feed/Lift Motor (PL 9.6).

Measure the resistance between the MCU PWB P/J416-5/6/7/8 and the Frame. **Is the resistance infinite for all?**

Y N

Check the wires of the pins with non-infinite resistance for peeled-off coatings and short circuits due to pinching.

Replace the MCU PWB (PL 18.1).

Press the **Stop** button. Turn ON dC330 [072-102] (Tray 2 Nudger Level Sensor). Use a sheet of paper, etc. to block/clear the light path to the Tray 2 Nudger Level Sensor. **Does the display change between High/Low?**

Y N

Use OF 99-2 RAP to check the Tray 2 Nudger Level Sensor (PL 9.4).

Press the **Stop** button and turn the power OFF. Check the Tray Lift Gear for damage or the Tray Lift mechanism for mechanical load. Reload the machine software (GP 9). If no problems are found, replace the MCU PWB (PL 18.1).

372-212 Paper Size Sensor Broken (Tray 2)

BSD-ON:BSD 7.2 - Tray 2 Paper Size Sensing

Abnormal output AD value from Tray 2 Size Sensor was detected.

NOTE: *When turning the power OFF, turn OFF the power switch first and then the main power switch.*

Procedure

Check the following:

- Broken link and breakage at the bottom of the tray
- The Actuator at the rear of the Tray for operation failure
- The Tray 2 Paper Size Sensor for failure: dC140 [072-200], dC330 [072-104] (PL 9.1)
- The connection between the Tray 2 Paper Size Sensor P/J119 and the MCU PWB P/J412 for open circuit, short circuit, and poor contact

Reload the machine software (GP 9). If no problems are found, replace the MCU PWB (PL 18.1).

372-900 Feed Out Sensor Static Jam (Tray 2)

BSD-ON:BSD 8.1 - Tray 1, 2, MSI Paper Transportation

When the power was turned ON, the M/C was stopped (Cycle Down/ Shut Down), or when the interlocks were closed (all interlocks including options), the Tray 2 Feed Out Sensor detected paper.

NOTE: *When turning the power OFF, turn OFF the power switch first and then the main power switch.*

Procedure

Check the following:

- The Tray 2 Feed Out Sensor for remaining paper, contamination, Actuator return failure, or improper installation
- The Tray 2 Feed Out Sensor for failure: dC330 [072-103] (PL 15.3)
- The connection between the Tray 2 Feed Out Sensor P/J113-2 and the MCU PWB P/J405-2 for short circuit

Reload the machine software (GP 9).If no problems are found, replace the MCU PWB (PL 18.1).

373-101 Misfeed (Tray 3)

BSD-ON:BSD 7.8 - Tray 3 Paper Stacking

BSD-ON:BSD 8.2 - Tray Module Paper Transportation (1 of 2)

BSD-ON:BSD 8.3 - Tray Module Paper Transportation (2 of 2)

The Tray 3 Feed Out Sensor does not turn ON within the specified time after the Feed from Tray 3 has started.

NOTE: *When turning the power OFF, turn OFF the power switch first and then the main power switch.*

Initial Actions

Remove the Rear Lower Cover and the Rear Cover. Go to the **+24VDC-2 Wirenet (2 of 2)**. Check the connection between the MCU PWB P423 and the Tray Module PWB P/J541 for open circuit, short circuit, and poor contact.

Procedure

Remove Tray 3. Turn the power ON and enter the Diag mode. Turn ON dC330 [073-001] (Tray 3 Feed/Lift Motor). **Does the Tray 3 Feed/Lift Motor rotate?**

Y N

Go to the **+24VDC-2 Wirenet (2 of 2)**. **Is the voltage between the Tray Module PWB P/J541-8 (+) and the GND (-) +24VDC?**

Y N

Go to +24VDC Power.

Turn the power OFF, then measure the Tray 3 Feed/Lift Motor wire wound resistance. Check the resistance of the following.

- Between the Tray Module PWB P/J555-1 and P/J555-2
- Between the Tray Module PWB P/J555-3 and P/J555-4

Is the resistance approx. 4Ohm for each? (When the temperature is 25 °C)

Y N

Check the connection between the Tray Module PWB P/J555 and the Tray 3 Feed/Lift Motor P/J222 for open circuit, short circuit, and poor contact. If there are no problems, replace the Tray 3 Feed/Lift Motor (PL 10.6).

Measure the resistance between the Tray Module PWB P/J555-1/2/3/4 and the Frame. **Is the resistance infinite for all?**

Y N

Check the wires of the pins with non-infinite resistance for peeled-off coatings and short circuits due to pinching.

Replace the following parts in sequence:

- Tray Module PWB (PL 10.7)
- MCU PWB (PL 18.1)

Press the **Stop** button. Turn ON dC330 [077-033] (TM Takeaway Motor). **Does the TM Takeaway Motor rotate?**

Y N

Is the voltage between the TM Takeaway Motor P/J224-2/5 (+) and the GND (-) +24VDC?

Y N

Go to +24VDC Power.

Turn the power OFF, disconnect the TM Takeaway Motor connector P/J224. Measure the TM Takeaway Motor wire wound resistance.

- Between the TM Takeaway Motor P/J224-2 and P/J224-1
- Between the TM Takeaway Motor P/J224-2 and P/J224-3
- Between the TM Takeaway Motor P/J224-5 and P/J224-4
- Between the TM Takeaway Motor P/J224-5 and P/J224-6

Is the resistance approx. 0.85 Ohm for each? (When the temperature is 25 °C)

Y N

Replace the TM Takeaway Motor (PL 10.7)

Measure the resistance between the disconnected TM Takeaway Motor connectors P/J224-1/3/4/6 and the Frame. **Is the resistance infinite for all?**

Y N

Check the wires of the pins with non-infinite resistance for peeled-off coatings and short circuits due to pinching.

Check the connection between the Tray Module PWB P/J554 and the TM Takeaway Motor P/J224 for open circuit, short circuit, and poor contact. If no problems are found, replace the following parts in sequence:

- Tray Module PWB (PL 10.7)
- MCU PWB (PL 18.1)

Press the **Stop** button and open the L/H Cover. Turn ON dC330 [073-103] (Tray 3 Feed Out Sensor). Move the Actuator manually to block/clear the light path to the Tray 3 Feed Out Sensor. **Does the display change between High/Low?**

Y N

Use to check the Tray 3 Feed Out Sensor (PL 10.3).

Press the **Stop** button and turn the power OFF. Check the following:

- A paper transportation failure due to a foreign substance/burr on the paper path
- The Feed Roll, Retard Roll, and Nudger Roll for contamination, wear, and revolution failure
- The Takeaway Roll 3 and Pinch Roll for contamination, wear, and revolution failure
- The Feed Roll, Retard Roll, and Nudger Roll Drive Gears for wear and damage
- The Takeaway Roll 3 Drive Gear for wear and damage
- Use of paper out of spec

If no problems are found, perform the following in sequence:

- Reload the machine software (GP 9).
- Tray Module PWB (PL 10.7)
- MCU PWB (PL 18.1)

373-102 Feed Out Sensor 3 On Jam (Tray 4)

BSD-ON:BSD 8.2 - Tray Module Paper Transportation (1 of 2)

BSD-ON:BSD 8.3 - Tray Module Paper Transportation (2 of 2)

The Tray 3 Feed Out Sensor does not turn ON within the specified time after the Feed from Tray 4 has started.

NOTE: *When turning the power OFF, turn OFF the power switch first and then the main power switch.*

Initial Actions

Check the following:

- A paper transportation failure due to a foreign substance/burr on the paper path
- The Take Away Roll 3 or 4 and the Pinch Roll for contamination, wear and a revolution failure
- The Drive Gear of the Take Away Roll 3 or 4 for wear and damage
- Use of paper out of spec
- The Tray 3 Feed Out Sensor for contamination, improper installation, and Actuator operation failure

Procedure

Check the following:

- The Tray 3 Feed Out Sensor for failure: dC330 [073-103] (PL 10.3)
- The connection between the Tray 3 Feed Out Sensor P/J108 and the Tray Module PWB P/J548 for open circuit, short circuit, and poor contact
- The TM Takeaway Motor for revolution failure: dC330 [077-033] (PL 10.7)
- Go to **+5VDC Wirenet (1 of 4)** and **+5VDC Wirenet (4 of 4)**. Check the connection between the MCU PWB P423 and the Tray Module PWB P/J541 for open circuit, short circuit, and poor contact

If no problems are found, perform the following in sequence:

- Reload the machine software (GP 9).
- Tray Module PWB (PL 10.7)
- MCU PWB (PL 18.1)

373-105 Registration Sensor On Jam (Tray 3)

BSD-ON:BSD 4.1 - Main Drive Control

BSD-ON: BSD 7.8 - Tray 3 Paper Stacking

BSD-ON:BSD 8.1 - Tray 1, 2, MSI Paper Transportation

BSD-ON:BSD 8.3 - Tray Module Paper Transportation (2 of 2)

BSD-ON:BSD 8.4 - Registration

The Registration Sensor does not turn ON within the specified time after the Registration Clutch On after the Feed from Tray 3 has started.

NOTE: *When turning the power OFF, turn OFF the power switch first and then the main power switch.*

Initial Actions

Check the following:

- A paper transportation failure due to a foreign substance/burr on the paper path
- The Tray 3 Feed Roll, Retard Roll, and Nudger Roll for contamination, wear, and revolution failure (when the jam has occurred during Feed from Tray 3)
- The TM Takeaway Roll and Pinch Roll for contamination, wear, and revolution failure
- The TM Takeaway Roll Drive Gear for wear and damage
- The Take Away Roll 2 or 3 and the Pinch Roll for contamination, wear and a revolution failure
- The Drive Gear of the Take Away Roll 2 or 3 for wear and damage
- Use of paper out of spec
- The Registration Sensor for contamination, improper installation, and Actuator operation failure

Procedure

Check the following:

- The Registration Sensor for failure: dC330 [077-104] (PL 15.2)
- The connection between the Registration Sensor P/J105 and the MCU PWB P/J407 for open circuit, short circuit, and poor contact
- The Main Drive Motor for revolution failure: dC330 [042-006] (PL 3.3)
- The Takeaway Clutch for failure: dC330 [077-001] (PL 15.1)
- The Tray 3 Feed/Lift Motor for revolution failure: dC330 [073-001] (PL 10.6) (when the jam has occurred during Feed from Tray 3)
- The TM Takeaway Motor for failure: dC330 [077-033] (PL 10.7) (when the jam has occurred during Feed from Tray 3)
- The Registration Transport Assy (PL 15.1) for installation failure

If no problems are found, perform the following in sequence:

- Reload the machine software (GP 9).

- Tray Module PWB (PL 10.7)
- MCU PWB (PL 18.1)

373-210 Lift Fail (Tray 3)

BSD-ON:BSD 7.8 - Tray 3 Paper Stacking

Tray 3 Lift NG has occurred 3 times in a row.

NOTE: *When turning the power OFF, turn OFF the power switch first and then the main power switch.*

Procedure

Remove Tray 3. Turn the power ON and enter the Diag mode. Turn ON dC330 [073-001] (Tray 3 Feed/Lift Motor). **Does the Tray 3 Feed/Lift Motor rotate?**

Y N

Go to the **+24VDC-2 Wirenet (2 of 2)**. **Is the voltage between the Tray Module PWB P/J541-8 (+) and the GND (-) +24VDC?**

Y N

Go to +24VDC Power.

Turn the power OFF, then measure the Tray 3 Feed/Lift Motor wire wound resistance. Remove the Rear Cover, then measure the following resistances.

- Between the Tray Module PWB P/J555-1 and P/J555-2
- Between the Tray Module PWB P/J555-3 and P/J555-4

Is the resistance approx. 4Ohm for each? (When the temperature is 25 degree)

Y N

Check the connection between the Tray Module PWB P/J555 and the Tray 3 Feed/Lift Motor P/J222 for open circuit, short circuit, and poor contact. If there are no problems, replace the Tray 3 Feed/Lift Motor (PL 10.6).

Measure the resistance between the Tray Module PWB P/J555-1/2/3/4 and the Frame. **Is the resistance infinite for all?**

Y N

Check the wires of the pins with non-infinite resistance for peeled-off coatings and short circuits due to pinching.

Replace the following parts in sequence:

- Tray Module PWB (PL 10.7)
- MCU PWB (PL 18.1)

Press the **Stop** button. Turn ON dC330 [073-102] (Tray 3 Nudger Level Sensor). Use a sheet of paper, etc. to block/clear the light path to the Tray 3 Nudger Level Sensor. **Does the display change between High/Low?**

Y N

Use to check the Tray 3 Nudger Level Sensor (PL 10.4).

Press the **Stop** button and turn the power OFF.

Check the Tray Lift Gear for damage or the Tray Lift mechanism for mechanical load. If no problems are found, replace the following parts in sequence:

- Reload the machine software (GP 9).
- Tray Module PWB (PL 10.7)
- MCU PWB (PL 18.1)

373-212 Paper Size Sensor Broken (Tray 3)

BSD-ON:BSD 7-3 - Tray 3 Paper Size Sensing

Abnormal output AD value from Tray 3 Size Sensor was detected.

NOTE: *When turning the power OFF, turn OFF the power switch first and then the main power switch.*

Procedure

Check the following:

- Broken link and breakage at the bottom of the tray
- The Actuator at the rear of the Tray for operation failure
- The Tray 3 Paper Size Sensor for failure: dC140 [073-200], dC330 [073-104] (PL 10.1)
- The connection between the Tray 3 Paper Size Sensor P/J102 and the Tray Module PWB P/J548 for open circuit, short circuit, and poor contact

If no problems are found, replace the following parts in sequence:

- Reload the machine software (GP 9).
- Tray Module PWB (PL 10.7)
- MCU PWB (PL 18.1)

373-900 Feed Out Sensor Static Jam (Tray 3)

BSD-ON:BSD 8.2 - Tray Module Paper Transportation (1 of 2)

When the power was turned ON, the M/C was stopped (Cycle Down/ Shut Down), or when the interlocks were closed (all interlocks including options), the Tray 3 Feed Out Sensor detected paper.

NOTE: *When turning the power OFF, turn OFF the power switch first and then the main power switch.*

Procedure

Check the following:

- The Tray 3 Feed Out Sensor for remaining paper, contamination, Actuator return failure, or improper installation
- The Tray 3 Feed Out Sensor for failure: dC330 [073-103] (PL 10.3)
- The connection between the Tray 3 Feed Out Sensor P/J108-1 and the Tray Module PWB P/J548-B3 for short circuit
- Go to the Wirenets. The connection between the MCU PWB P423-A5 and the Tray Module PWB P/J541-5 for short circuit

If no problems are found, replace the following parts in sequence:

- Reload the machine software (GP 9).
- Tray Module PWB (PL 10.7)
- MCU PWB (PL 18.1)

374-101 Miss Feed (Tray 4)

BSD-ON:BSD 7.9 - Tray 4 Paper Stacking

BSD-ON:BSD 8.2 - Tray Module Paper Transportation (1 of 2)

BSD-ON:BSD 8.3 - Tray Module Paper Transportation (2 of 2)

The Tray 4 Feed Out Sensor does not turn ON within the specified time after the Feed from Tray 4 has started.

NOTE: *When turning the power OFF, turn OFF the power switch first and then the main power switch.*

Initial Actions

Remove the Rear Lower Cover and the Rear Cover. Go to the Wirenets. Check the connection between the MCU PWB P423 and the Tray Module PWB P/J541 for open circuit, short circuit, and poor contact.

Procedure

Remove Tray 4. Turn the power ON and enter the Diag mode. Turn ON dC330 [074-001] (Tray 4 Feed/Lift Motor). **Does the Tray 4 Feed/Lift Motor rotate?**

Y N

Go to the +24VDC-2 Wirenet. **Is the voltage between the Tray Module PWB P/J541-8 (+) and the GND (-) +24VDC?**

Y N

Go to +24VDC Power.

Turn the power OFF, then measure the Tray 4 Feed/Lift Motor wire wound resistance. Check the resistance of the following.

- Between the Tray Module PWB P/J555-5 and P/J555-6
- Between the Tray Module PWB P/J555-7 and P/J555-8

Is the resistance approx. 4Ohm for each? (When the temperature is 25 degree)

Y N

Check the connection between the Tray Module PWB P/J555 and the Tray 4 Feed/Lift Motor P/J223 for open circuit, short circuit, and poor contact. If there are no problems, replace the Tray 4 Feed/Lift Motor (PL 10.6).

Measure the resistance between the Tray Module PWB P/J555-5/6/7/8 and the Frame. **Is the resistance infinite for all?**

Y N

Check the wires of the pins with non-infinite resistance for peeled-off coatings and short circuits due to pinching.

Replace the following parts in sequence:

- Tray Module PWB (PL 10.7)
- MCU PWB (PL 18.1)

Press the **Stop** button. Turn ON dC330 [077-033] (TM Takeaway Motor). **Does the TM Takeaway Motor rotate?**

Y N

Is the voltage between the TM Takeaway Motor P/J224-2/5 (+) and the GND (-) +24VDC?

Y N

Go to +24VDC Power.

Turn the power OFF, disconnect the TM Takeaway Motor connector P/J224. Measure the TM Takeaway Motor wire wound resistance.

- Between the TM Takeaway Motor P/J224-2 and P/J224-1
- Between the TM Takeaway Motor P/J224-2 and P/J224-3
- Between the TM Takeaway Motor P/J224-5 and P/J224-4
- Between the TM Takeaway Motor P/J224-5 and P/J224-6

Is the resistance approx. 0.85Ohm for each? (When the temperature is 25 degree)

Y N

Replace the TM Takeaway Motor (PL 10.7)

Measure the resistance between the disconnected TM Takeaway Motor connectors P/J224-1/3/4/6 and the Frame. **Is the resistance infinite for all?**

Y N

Check the wires of the pins with non-infinite resistance for peeled-off coatings and short circuits due to pinching.

Check the connection between the Tray Module PWB P/J554 and the TM Takeaway Motor P/J224 for open circuit, short circuit, and poor contact. If no problems are found, replace the following parts in sequence:

- Tray Module PWB (PL 10.7)
- MCU PWB (PL 18.1)

Press the **Stop** button and open the L/H Cover. Turn ON dC330 [074-103] (Tray 4 Feed Out Sensor). Move the Actuator manually to block/clear the light path to the Tray 4 Feed Out Sensor. **Does the display change between High/Low?**

Y N

Use to check the Tray 4 Feed Out Sensor (PL 10.3).

Press the **Stop** button and turn the power OFF. Check the following:

- A paper transportation failure due to a foreign substance/burr on the paper path
- The Feed Roll, Retard Roll, and Nudger Roll for contamination, wear, and revolution failure
- The Takeaway Roll 4 and Pinch Roll for contamination, wear, and revolution failure
- The Feed Roll, Retard Roll, and Nudger Roll Drive Gears for wear and damage
- The Takeaway Roll 4 Drive Gear for wear and damage
- Use of paper out of spec

If no problems are found, replace the following parts in sequence:

- Reload the machine software (GP 9).
- Tray Module PWB (PL 10.7)
- MCU PWB (PL 18.1)

374-105 Registration Sensor On Jam (Tray 4)

BSD-ON:BSD 4.1 - Main Drive Control

BSD-ON:BSD 7.9 - Tray 4 Paper Stacking

BSD-ON:BSD 8.1 - Tray 1, 2, MSI Paper Transportation

BSD-ON:BSD 8.3 - Tray Module Paper Transportation (2 of 2)

BSD-ON:BSD 8.4 - Registration

The Registration Sensor does not turn ON within the specified time after the Registration Clutch On after the Feed from Tray 4 has started.

NOTE: *When turning the power OFF, turn OFF the power switch first and then the main power switch.*

Initial Actions

Check the following:

- A paper transportation failure due to a foreign substance/burr on the paper path
- The Tray 4 Feed Roll, Retard Roll, and Nudger Roll for contamination, wear, and revolution failure (when the jam has occurred during Feed from Tray 4)
- The TM Takeaway Roll and Pinch Roll for contamination, wear, and revolution failure
- The TM Takeaway Roll Drive Gear for wear and damage
- The Take Away Roll 2, 3 or 4 and the Pinch Roll for contamination, wear and a revolution failure
- The Drive Gear of the Take Away Roll 2, 3 or 4 for wear and damage
- Use of paper out of spec
- The Registration Sensor for contamination, improper installation, and Actuator operation failure

Procedure

Check the following:

- The Registration Sensor for failure: dC330 [077-104] (PL 15.2)
- The connection between the Registration Sensor P/J105 and the MCU PWB P/J407 for open circuit, short circuit, and poor contact
- The Main Drive Motor for revolution failure: dC330 [042-006] (PL 3.3)
- The Takeaway Clutch for failure: dC330 [077-001] (PL 15.1)
- The Tray 4 Feed/Lift Motor for revolution failure: dC330 [074-001] (PL 10.6) (when the jam has occurred during Feed from Tray 4)
- The TM Takeaway Motor for failure: dC330 [077-033] (PL 10.7) (when the jam has occurred during Feed from Tray 4)
- The Registration Transport Assy (PL 15.1) for installation failure

If no problems are found, replace the following parts in sequence:

- Reload the machine software (GP 9).
- Tray Module PWB (PL 10.7)
- MCU PWB (PL 18.1)

374-210 Lift Fail (Tray 4)

BSD-ON:BSD 7.9 - Tray 4 Paper Stacking

Tray 4 Lift NG has occurred 3 times in a row.

NOTE: *When turning the power OFF, turn OFF the power switch first and then the main power switch.*

Procedure

Remove Tray 4. Turn the power ON and enter the Diag mode. Turn ON dC330 [074-001] (Tray 4 Feed/Lift Motor). **Does the Tray 4 Feed/Lift Motor rotate?**

Y N

Go to the +24VDC-2 Wirenet. **Is the voltage between the Tray Module PWB P/J541-8 (+) and the GND (-) +24VDC?**

Y N

Go to +24VDC Power.

Turn the power OFF, then measure the Tray 4 Feed/Lift Motor wire wound resistance. Remove the Rear Cover, then measure the following resistances.

- Between the Tray Module PWB P/J555-5 and P/J555-6
- Between the Tray Module PWB P/J555-7 and P/J555-8

Is the resistance approx. 4Ohm for each? (When the temperature is 25 degree)

Y N

Check the connection between the Tray Module PWB P/J555 and the Tray 4 Feed/Lift Motor P/J223 for open circuit, short circuit, and poor contact. If there are no problems, replace the Tray 4 Feed/Lift Motor (PL 10.6).

Measure the resistance between the Tray Module PWB P/J555-5/6/7/8 and the Frame. **Is the resistance infinite for all?**

Y N

Check the wires of the pins with non-infinite resistance for peeled-off coatings and short circuits due to pinching.

Replace the following parts in sequence:

- Tray Module PWB (PL 10.7)
- MCU PWB (PL 18.1)

Press the **Stop** button. Turn ON dC330 [074-102] (Tray 4 Nudger Level Sensor). Use a sheet of paper, etc. to block/clear the light path to the Tray 4 Nudger Level Sensor. **Does the display change between High/Low?**

Y N

Use to check the Tray 4 Nudger Level Sensor (PL 10.4).

Press the **Stop** button and turn the power OFF. Check the Tray Lift Gear for damage or the Tray Lift mechanism for mechanical load. If no problems are found, replace the following parts in sequence:

- Reload the machine software (GP 9).
- Tray Module PWB (PL 10.7)
- MCU PWB (PL 18.1)

374-212 Paper Size Sensor Broken (Tray 4)

BSD-ON:BSD 7.4 - Tray 4 Paper Size Sensing

Abnormal output AD value from Tray 4 Size Sensor was detected.

NOTE: *When turning the power OFF, turn OFF the power switch first and then the main power switch.*

Procedure

Check the following:

- Broken link and breakage at the bottom of the tray
- The Actuator at the rear of the Tray for operation failure
- The Tray 4 Paper Size Sensor for failure: dC140 [074-200], dC330 [074-104] (PL 10.1)
- The connection between the Tray 4 Paper Size Sensor P/J103 and the Tray Module PWB P/J548 for open circuit, short circuit, and poor contact

If no problems are found, replace the following parts in sequence:

- Reload the machine software (GP 9).
- Tray Module PWB (PL 10.7)
- MCU PWB (PL 18.1)

374-900 Feed Out Sensor Static Jam (Tray 4)

BSD-ON:BSD 8.2 - Tray Module Paper Transportation (1 of 2)

When the power was turned ON, the M/C was stopped (Cycle Down/ Shut Down), or when the interlocks were closed (all interlocks including options), the Tray 4 Feed Out Sensor detected paper.

NOTE: *When turning the power OFF, turn OFF the power switch first and then the main power switch.*

Procedure

Check the following:

- The Tray 4 Feed Out Sensor for remaining paper, contamination, Actuator return failure, or improper installation
- The Tray 4 Feed Out Sensor for failure: dC330 [074-103] (PL 10.3)
- The connection between the Tray 4 Feed Out Sensor P/J116-2 and the Tray Module PWB P/J548-A2 for short circuit
- Go to **+5VDC Wirenet (1 of 4)** and **+5VDC Wirenet (4 of 4)**. Check the connection between the MCU PWB P423-A5 and the Tray Module PWB P/J541-5 for short circuit

If no problems are found, replace the following parts in sequence:

- Reload the machine software (GP 9).
- Tray Module PWB (PL 10.7)
- MCU PWB (PL 18.1)

375-135 Registration Sensor On Jam (MSI)

BSD-ON:BSD 4.1 - Main Drive Control

BSD-ON:BSD 8.1 - Tray 1, 2, MSI Paper Transportation

BSD-ON:BSD 8.4 - Registration

The Registration Sensor does not turn ON within the specified time after the Registration Clutch On after the Feed from the MSI has started.

NOTE: *When turning the power OFF, turn OFF the power switch first and then the main power switch.*

Initial Actions

Check the following:

- A paper transportation failure due to a foreign substance/burr on the paper path
- The Takeaway Roll and Pinch Roll for contamination, wear, and revolution failure
- The Takeaway Roll Drive Gear for wear and damage
- Use of paper out of spec
- The Registration Sensor for contamination, improper installation, and Actuator operation failure

Procedure

Check the following:

- The Registration Sensor for failure: dC330 [077-104] (PL 15.2)
- The connection between the Registration Sensor P/J105 and the MCU PWB P/J407 for open circuit, short circuit, and poor contact
- The Main Drive Motor for revolution failure: dC330 [042-006] (PL 3.3)
- The MSI Feed Solenoid for failure: dC330 [075-001] (PL 13.2)
- The Takeaway Clutch for failure: dC330 [077-001] (PL 15.1)
- The Registration Transport Assy (PL 15.1) for installation failure

Reload the machine software (GP 9). If no problems are found, replace the MCU PWB (PL 18.1).

377-101 Registration Sensor Off Jam

BSD-ON:BSD 4.1 - Main Drive Control

BSD-ON:BSD 8.1 - Tray 1, 2, MSI Paper Transportation

BSD-ON:BSD 8.4 - Registration

BSD-ON:BSD 9.1 - Drum/IBT Drive Control

BSD-ON:BSD 10.1 - Fuser Drive Control

The Registration Sensor does not turn OFF within the specified time after the Registration Clutch On.

NOTE: *When turning the power OFF, turn OFF the power switch first and then the main power switch.*

Initial Actions

Check the following:

- A paper transportation failure due to a foreign substance/burr on the paper path
- Each Takeaway Roll and Pinch Roll for contamination, wear, and revolution failure
- The Registration Roll and Pinch Roll for contamination, wear, and revolution failure
- The 2nd BTR for contamination, wear, and revolution failure
- Each Exit Roll and Pinch Roll for contamination, wear, and revolution failure
- Each Takeaway Roll Drive Gear for wear and damage
- The Registration Roll Drive Gear for wear and damage
- The Fuser Drive Gear for wear and damage
- Each Exit Roll Drive Gear for wear and damage
- Use of paper out of spec
- The Registration Sensor for contamination, improper installation, and Actuator operation failure

Procedure

Check the following:

- The Registration Sensor for failure: dC330 [077-104] (PL 15.2)
- The connection between the Registration Sensor P/J105 and the MCU PWB P/J407 for open circuit, short circuit, and poor contact
- The Main Drive Motor for revolution failure: dC330 [042-006] (PL 3.3)
- The Fuser Drive Motor for revolution failure: dC330 [010-001] (PL 3.1)
- The Takeaway Clutch for failure: dC330 [077-001] (PL 15.1)
- The Registration Clutch for failure: dC330 [077-002] (PL 15.2)
- The Registration Transport Assy (PL 15.1) for installation failure

Reload the machine software (GP 9). If no problems are found, replace the MCU PWB (PL 18.1).

377-103 Exit Sensor 1 Off Jam

BSD-ON:BSD 10.1 - Fuser Drive Control

BSD-ON:BSD 10.5 - Fusing

BSD-ON:BSD 10.7 - Fused Paper Exit 2

After the Fuser Exit Sensor turned ON, the Fuser Exit Sensor did not turn OFF within the specified time.

NOTE: *When turning the power OFF, turn OFF the power switch first and then the main power switch.*

Initial Actions

Check the following:

- A paper transportation failure due to a foreign substance/burr on the paper path
- The Fuser for wound up, stuck paper
- Each Exit Roll and Pinch Roll for contamination, wear, and revolution failure
- Each Exit Roll Drive Gear for wear and damage
- The Exit 1 Gate for operation failure
- Use of paper out of spec
- The Fuser Exit Sensor for contamination, improper installation, and Actuator operation failure

Procedure

Check the following:

- The Fuser Exit Sensor for failure: dC330 [077-101] (PL 7.1)
- Go to the Wirenets. The connection between the Fuser Assembly DP/DJ612 and the MCU PWB P/J408 for open circuit, short circuit, and poor contact
- The Fuser Drive Motor for revolution failure: dC330 [010-001] (PL 3.1)
- The Exit 2 Motor for revolution failure: dC330 [077-015] (PL 17.3)
- The Exit Gate Solenoid for failure: dC330 [077-004] (PL 17.4)

Reload the machine software (GP 9). If no problems are found, replace the MCU PWB (PL 18.1).

377-104 Exit Sensor 1 Off Jam (Short)

BSD-ON:BSD 10.1 - Fuser Drive Control

BSD-ON:BSD 10.5 - Fusing

BSD-ON:BSD 10.7 - Fusing Paper Exit 2

The time between the Fusing Unit Exit Sensor On and the Sensor Off is shorter than the specified time.

NOTE: *When turning the power OFF, turn OFF the power switch first and then the main power switch.*

Procedure

Check the following:

- Use of paper out of spec
- The Fusing Unit Exit Sensor for failure: dC330 [077-101] (PL 7.1)
- The connection between the Fusing Unit DJ612 and the MCU PWB J408 for open circuit, short circuit, and poor contact
- The Fusing Unit Drive Motor for revolution failure: dC330 [010-001] (PL 3.1)
- The Exit 2 Motor for revolution failure: dC330 [077-015] (PL 17.3)
- Reload the machine software (GP 9)
- If no problems are found, replace the MCU PWB (PL 18.1)

..

377-105 Exit Sensor 2 Off Jam

BSD-ON:BSD 10.7 - Fused Paper Exit 2

After the Exit 2 Sensor turned ON, the Exit 2 Sensor did not turn OFF within the specified time.

NOTE: *When turning the power OFF, turn OFF the power switch first and then the main power switch.*

Procedure

Check the following:

- A paper transportation failure due to a foreign substance/burr on the paper path
- The Exit 2 Roll and Pinch Roll for contamination, wear, and revolution failure
- The Exit 2 Roll Drive Gear for wear and damage
- Use of paper out of spec
- The Exit 2 Sensor for contamination, improper installation, and Actuator operation failure
- The Exit 2 Sensor for failure: dC330 [077-100] (PL 17.4)
- The connection between the Exit 2 Sensor P/J111 and the MCU PWB P/J407 for open circuit, short circuit, and poor contact
- The Exit 2 Motor for revolution failure: dC330 [077-015] (PL 17.3)

Reload the machine software (GP 9). If no problems are found, replace the MCU PWB (PL 18.1).

377-106 Exit Sensor 1 On Jam

BSD-ON:BSD 4.1 - Main Drive Control

BSD-ON:BSD 8.1 - Tray 1, 2, MSI Paper Transportation

BSD-ON:BSD 10.1 - Fuser Drive Control

BSD-ON:BSD 10.5 - Fusing

The Fuser Exit Sensor does not turn ON within the specified time after the Registration Clutch On.

NOTE: *When turning the power OFF, turn OFF the power switch first and then the main power switch.*

Initial Actions

Check the following:

- A paper transportation failure due to a foreign substance/burr on the paper path
- Each Takeaway Roll and Pinch Roll for contamination, wear, and revolution failure
- The Registration Roll and Pinch Roll for contamination, wear, and revolution failure
- The 2nd BTR for contamination, wear, and revolution failure
- The Fuser for wound up, stuck paper
- Each Takeaway Roll Drive Gear for wear and damage
- The Registration Roll Drive Gear for wear and damage
- The Fuser Drive Gear for wear and damage
- Use of paper out of spec
- The Fuser Exit Sensor for contamination, improper installation, and Actuator operation failure

Procedure

Check the following:

- A paper transportation failure due to a foreign substance/burr on the paper path
- Each Takeaway Roll and Pinch Roll for contamination, wear, and revolution failure
- The Registration Roll and Pinch Roll for contamination, wear, and revolution failure
- The 2nd BTR for contamination, wear, and revolution failure
- The Fuser for wound up, stuck paper
- Each Takeaway Roll Drive Gear for wear and damage
- The Registration Roll Drive Gear for wear and damage
- The Fuser Drive Gear for wear and damage
- Use of paper out of spec
- The Fuser Exit Sensor for contamination, improper installation, and Actuator operation failure

Reload the machine software (GP 9). If no problems are found, replace the MCU PWB (PL 18.1).

377-109 Exit Sensor 2 On Jam

BSD-ON:BSD 10.1 - Fuser Drive Control

BSD-ON:BSD 10.7 - Fused Paper Exit 2

After the Fuser Exit Sensor turned ON, the Exit 2 Sensor did not turn ON within the specified time.

NOTE: *When turning the power OFF, turn OFF the power switch first and then the main power switch.*

Initial Actions

Check the following:

- A paper transportation failure due to a foreign substance/burr on the paper path
- Each Exit Roll and Pinch Roll for contamination, wear, and revolution failure
- The Fuser for wound up, stuck paper
- Each Exit Roll Drive Gear for wear and damage
- The Exit 1 Gate for operation failure
- Use of paper out of spec
- The Exit 2 Sensor for contamination, improper installation, and Actuator operation failure

Procedure

Check the following:

- The Exit 2 Sensor for failure: dC330 [077-100] (PL 17.4)
- The connection between the Exit 2 Sensor P/J111 and the MCU PWB P/J407 for open circuit, short circuit, and poor contact
- The Fuser Drive Motor for revolution failure: dC330 [010-001] (PL 3.1)
- The Exit 2 Motor for revolution failure: dC330 [077-015] (PL 17.3)
- The Exit Gate Solenoid for failure: dC330 [077-004] (PL 17.4)

Reload the machine software (GP 9). If no problems are found, replace the MCU PWB (PL 18.1).

377-110 POB Sensor On Jam

BSD-ON:BSD 4.1 - Main Drive Control

BSD-ON:BSD 8.1 - Tray 1, 2, MSI Paper Transportation

BSD-ON:BSD 8.4 - Registration

BSD-ON:BSD 9.15 - Image Transfer to Transfer Belt

BSD-ON:BSD 9.16 - Image Transfer to Paper

BSD-ON:BSD 9.17 - Stripping

The POB Sensor does not turn ON within the specified time after the Registration Clutch On.

NOTE: *When turning the power OFF, turn OFF the power switch first and then the main power switch.*

Initial Actions

Check the following:

- A paper transportation failure due to a foreign substance/burr on the paper path
- Each Takeaway Roll and Pinch Roll for contamination, wear, and revolution failure
- The Registration Roll and Pinch Roll for contamination, wear, and revolution failure
- The 2nd BTR for contamination, wear, and revolution failure
- The Transfer Belt for wound up, stuck paper
- Each Takeaway Roll Drive Gear for wear and damage
- The Registration Roll Drive Gear for wear and damage
- Use of paper out of spec
- The POB Sensor for contamination and improper installation

Procedure

Check the following:

- The POB Sensor for failure: dC330 [077-103] (PL 14.3)
- The connection between the POB Sensor P/J100 and the MCU PWB P/J406 for open circuit, short circuit, and poor contact
- The Main Drive Motor for revolution failure: dC330 [042-006] (PL 3.3)
- The Takeaway Clutch for failure: dC330 [077-001] (PL 15.1)
- The Registration Clutch for failure: dC330 [077-002] (PL 15.2)
- The Registration Transport Assy (PL 15.1) for installation failure

Reload the machine software (GP 9). If no problems are found, replace the MCU PWB (PL 18.1).

377-123 Registration Sensor On Jam (Duplex Wait)

BSD-ON:BSD 4.1 - Main Drive Control

BSD-ON:BSD 8.4 - Registration

BSD-ON:BSD 10.8 - Duplex Transportation

The Registration Sensor does not turn ON within the specified time after the Registration Clutch On after the Feed has started in Duplex Direct mode.

NOTE: *When turning the power OFF, turn OFF the power switch first and then the main power switch.*

Initial Actions

Check the following:

- A paper transportation failure due to a foreign substance/burr on the paper path
- Each Duplex Roll and Pinch Roll for contamination, wear, and revolution failure
- Each Duplex Roll Drive Gear for wear and damage
- Use of paper out of spec
- The Registration Sensor for contamination, improper installation, and Actuator operation failure

Procedure

Check the following:

- The Registration Sensor for failure: dC330 [077-104] (PL 15.2)
- The connection between the Registration Sensor P/J105 and the MCU PWB P/J407 for open circuit, short circuit, and poor contact
- The Main Drive Motor for revolution failure: dC330 [042-006] (PL 3.3)
- The Duplex Clutch for failure: dC330 [077-003] (PL 14.5)

Reload the machine software (GP 9). If no problems are found, replace the MCU PWB (PL 18.1).

377-130 Registration Sensor On Jam (Duplex Direct)

BSD-ON:BSD 4.1 - Main Drive Control

BSD-ON:BSD 8.4 - Registration

BSD-ON:BSD 10.8 - Duplex Transportation

The Registration Sensor does not turn ON within the specified time after the Registration Clutch On after the Feed has started in Duplex Direct mode.

NOTE: *When turning the power OFF, turn OFF the power switch first and then the main power switch.*

Procedure

Check the following:

- A paper transportation failure due to a foreign substance/burr on the paper path
- Each Duplex Roll and Pinch Roll for contamination, wear, and revolution failure
- Each Duplex Roll Drive Gear for wear and damage
- Use of paper out of spec
- The Registration Sensor for contamination, improper installation, and Actuator operation failure

Reload the machine software (GP 9). If no problems are found, replace the MCU PWB (PL 18.1).

377-131 Duplex Wait Sensor On Jam

BSD-ON:BSD 4.1 - Main Drive Control

BSD-ON:BSD 10.7 - Fused Paper Exit 2

BSD-ON:BSD 10.8 - Duplex Transportation

The Duplex Wait Sensor does not turn ON within the specified time after the Exit 2 Motor has started rotating in the Duplex intake direction.

NOTE: *When turning the power OFF, turn OFF the power switch first and then the main power switch.*

Initial Actions

Check the following:

- A paper transportation failure due to a foreign substance/burr on the paper path
- Each Duplex Roll and Pinch Roll for contamination, wear, and revolution failure
- Each Exit Roll and Pinch Roll for contamination, wear, and revolution failure
- Each Duplex Roll Drive Gear for wear and damage
- Each Exit Roll Drive Gear for wear and damage
- Use of paper out of spec
- The Duplex Wait Sensor for contamination, improper installation, and Actuator operation failure

Procedure

Check the following:

- The Duplex Wait Sensor for failure: dC330 [077-105] (PL 14.5)
- The connection between the Duplex Wait Sensor P/J101 and the MCU PWB P/J406 for open circuit, short circuit, and poor contact
- The Main Drive Motor for revolution failure: dC330 [042-006] (PL 3.3)
- The Duplex Clutch for failure: dC330 [077-003] (PL 14.5)
- The Exit 2 Motor for revolution failure: dC330 [077-015] (PL 17.3)
- The Exit Gate Solenoid for failure: dC330 [077-004] (PL 17.4)

Reload the machine software (GP 9). If no problems are found, replace the MCU PWB (PL 18.1).

377-211 Tray Module Kind Mismatch

BSD-ON:BSD 3.2 - MCU - Tray Module Communication

A different type of Tray Module is connected.

NOTE: *When turning the power OFF, turn OFF the power switch first and then the main power switch.*

Procedure

1. Turn the power OFF and ON.
2. Turn the power OFF and check the following:
   - The DIP Switch settings on the Tray Module PWB
   - Go to the Wirenets. The connection between the MCU PWB P423 and the Tray Module PWB P/J541 for open circuit, short circuit, and poor contact

   If no problems are found, replace the following parts in sequence:
   - Reload the machine software (GP 9).
   - Tray Module PWB (PL 10.7)
   - MCU PWB (PL 18.1)

377-212 Tray Module Reset Fail

BSD-ON:BSD 1.7 - DC Power Distribution (Options)

BSD-ON:BSD 3.2 - MCU - Tray Module Communication

The Tray Module reset was detected.

NOTE: *When turning the power OFF, turn OFF the power switch first and then the main power switch.*

Procedure

1. Turn the power OFF and ON.
2. Go to the Wirenets. Check whether the voltage between the Tray Module PWB P/J541-5 (+) and the GND (-) is +5VDC and whether the voltage between the Tray Module PWB P/J541-8 (+) and the GND (-) is +24VDC.
3. Turn the power OFF and check the connection between the MCU PWB P423 and the Tray Module PWB P/J541 for open circuit, short circuit, and poor contact.

   If no problems are found, replace the following parts in sequence:
   - Reload the machine software (GP 9).
   - Tray Module PWB (PL 10.7)
   - MCU PWB (PL 18.1)

377-214 Tray Module Logic Fail

BSD-ON:BSD 3.2 - MCU - Tray Module Communication

I/F mismatch between the IOT and the Tray Module was detected.

NOTE: *When turning the power OFF, turn OFF the power switch first and then the main power switch.*

Procedure

1. Turn the power OFF and ON.
2. Turn the power OFF. Go to the Wirenets. Check the connection between the MCU PWB P423 and the Tray Module PWB P/J541 for open circuit, short circuit, and poor contact.

   If no problems are found, replace the following parts in sequence:
   - Reload the machine software (GP 9).
   - Tray Module PWB (PL 10.7)
   - MCU PWB (PL 18.1)

377-215 Tray Module Communication Fail

BSD-ON:BSD 3.2 - MCU - Tray Module Communication

Communication error between Tray Module PWB and MCU PWB was detected.

NOTE: *When turning the power OFF, turn OFF the power switch first and then the main power switch.*

Procedure

1. Turn the power OFF and ON.
2. Turn the power OFF. Go to the Wirenets. Check the connection between the MCU PWB P423 and the Tray Module PWB P/J541 for open circuit, short circuit, and poor contact.

   If no problems are found, replace the following parts in sequence:
   - Reload the machine software (GP 9).
   - Tray Module PWB (PL 10.7)
   - MCU PWB (PL 18.1)

377-300 Front Cover Interlock Open

BSD-ON:BSD 1.8 - Power Interlock Switching (1 of 2)

NOTE: *The chain/link fault code for this RAP is an internal machine code and is never displayed or logged in Fault Code History. Use this RAP to troubleshoot persistent machine status conditions that cannot be cleared by performing the indicated process (e.g., loading paper, closing a cover, replacing a CRU, etc). Entry to this RAP is usually via the Machine Status Faults RAP located in the Other Faults section, or a chain/link listing on a BSD.*

The Front Cover is open.

NOTE: *When turning the power OFF, turn OFF the power switch first and then the main power switch.*

Procedure

Check the following:

- The Front Cover for damage or mismatch.
- The Front Cover Interlock Switch 1/2 for failure: dC330 [077-303] (PL 18.2)
- The connection between the L/H Cover Interlock Switch 2 P/J161-1 and the MCU PWB P/J414-3 for open circuit, short circuit, and poor contact

Reload the machine software (GP 9). If no problems are found, replace the MCU PWB (PL 18.1).

377-301 L/H Cover Interlock Open

BSD-ON:BSD 1.8 - Power Interlock Switching (1 of 2)

NOTE: *The chain/link fault code for this RAP is an internal machine code and is never displayed or logged in Fault Code History. Use this RAP to troubleshoot persistent machine status conditions that cannot be cleared by performing the indicated process (e.g., loading paper, closing a cover, replacing a CRU, etc). Entry to this RAP is usually via the Machine Status Faults RAP located in the Other Faults section, or a chain/link listing on a BSD.*

The L/H Cover is open.

NOTE: *When turning the power OFF, turn OFF the power switch first and then the main power switch.*

Procedure

Check the following:

- The L/H Cover Unit for damage or mismatch
- The L/H Cover Interlock Switch 1/2 for failure: dC330 [077-300] (PL 14.1)
- The connection between the MCU PWB P/J409-1 and the MCU PWB P/J409-8 for open circuit, short circuit, and poor contact

Reload the machine software (GP 9). If no problems are found, replace the MCU PWB (PL 18.1).

377-305 Tray Module L/H Cover Open

BSD-ON:BSD 8.2 - Tray Module Paper Transportation (1 of 2)

NOTE: *The chain/link fault code for this RAP is an internal machine code and is never displayed or logged in Fault Code History. Use this RAP to troubleshoot persistent machine status conditions that cannot be cleared by performing the indicated process (e.g., loading paper, closing a cover, replacing a CRU, etc). Entry to this RAP is usually via the Machine Status Faults RAP located in the Other Faults section, or a chain/link listing on a BSD.*

The Tray Module L/H Cover is open.

NOTE: *When turning the power OFF, turn OFF the power switch first and then the main power switch.*

Procedure

1. Turn the power OFF and ON.
2. Check the following:
   - The Tray Module L/H Cover for damage or mismatch
   - The Tray Module L/H Cover Switch for failure: dC330 [077-306] (PL 10.3)
   - The connection between the Tray Module L/H Cover Switch P/J104 and the Tray Module PWB P/J548 for open circuit, short circuit, and poor contact

   Reload the machine software (GP 9). If no problems are found, replace the MCU PWB (PL 18.1).

377-307 Duplex Cover Open

BSD-ON:BSD 10.8 - Duplex Transportation

NOTE: *The chain/link fault code for this RAP is an internal machine code and is never displayed or logged in Fault Code History. Use this RAP to troubleshoot persistent machine status conditions that cannot be cleared by performing the indicated process (e.g., loading paper, closing a cover, replacing a CRU, etc). Entry to this RAP is usually via the Machine Status Faults RAP located in the Other Faults section, or a chain/link listing on a BSD.*

The Duplex Cover is open.

NOTE: *When turning the power OFF, turn OFF the power switch first and then the main power switch.*

Procedure

Check the following:

- The Duplex Cover for damage or mismatch.
- The Duplex Cover Switch for failure: dC330 [077-305] (PL 14.1)
- The connection between the Duplex Cover Switch P/J102 and the MCU PWB P/J406 for open circuit, short circuit, and poor contact

Reload the machine software (GP 9). If no problems are found, replace the MCU PWB (PL 18.1).

377-308 L/H High Cover Open

BSD-ON:BSD 10.7 - Fused Paper Exit 2

NOTE: *The chain/link fault code for this RAP is an internal machine code and is never displayed or logged in Fault Code History. Use this RAP to troubleshoot persistent machine status conditions that cannot be cleared by performing the indicated process (e.g., loading paper, closing a cover, replacing a CRU, etc). Entry to this RAP is usually via the Machine Status Faults RAP located in the Other Faults section, or a chain/link listing on a BSD.*

The L/H High Cover is open.

NOTE: *When turning the power OFF, turn OFF the power switch first and then the main power switch.*

Procedure

Check the following:

- The L/H High Cover Assembly for damage or mismatch
- The L/H High Cover Switch for failure: dC330 [077-302] (PL 17.4)
- Turn the power OFF. Check the connection between the L/H High Cover Switch P/J112 and the MCU PWB P/J407 for open circuit, short circuit, and poor contact

Reload the machine software (GP 9). If no problems are found, replace the MCU PWB (PL 18.1).

377-309 L/H Low Cover Open

BSD-ON:BSD 1.8 - Power Interlock Switching (1 of 2)

NOTE: *The chain/link fault code for this RAP is an internal machine code and is never displayed or logged in Fault Code History. Use this RAP to troubleshoot persistent machine status conditions that cannot be cleared by performing the indicated process (e.g., loading paper, closing a cover, replacing a CRU, etc). Entry to this RAP is usually via the Machine Status Faults RAP located in the Other Faults section, or a chain/link listing on a BSD.*

The L/H Low Cover is open.

NOTE: *When turning the power OFF, turn OFF the power switch first and then the main power switch.*

Procedure

Check the following:

- The L/H Low Cover Assembly for damage or mismatch
- The L/H Low Cover Switch for failure: dC330 [077-301] (PL 15.1)
- The connection between the L/H Low Cover Switch P/J114 and the MCU PWB P/J405 for open circuit, short circuit, and poor contact

Reload the machine software (GP 9). If no problems are found, replace the MCU PWB (PL 18.1).

377-314 P/H Module Logic Fail

BSD-ON:BSD 3.2 - MCU - Tray Module Communication

A fatal error was detected in the Tray Module.

NOTE: *When turning the power OFF, turn OFF the power switch first and then the main power switch.*

Procedure

1. Turn the power OFF and ON.
2. Turn the power OFF and check the connection between the MCU PWB P423 and the Tray Module PWB P/J541 for open circuit, short circuit, and poor contact.

   If no problems are found, replace the following parts in sequence:
   - Reload the machine software (GP 9).
   - Tray Module PWB (PL 10.7)
   - MCU PWB (PL 18.1)

377-900 Registration Sensor Static Jam

BSD-ON:BSD 8.4 - Registration

When the power was turned ON, the M/C was stopped (Cycle Down/ Shut Down), or when the interlocks were closed (all interlocks including options), the Registration Sensor detected paper.

NOTE: *When turning the power OFF, turn OFF the power switch first and then the main power switch.*

Procedure

Check the following:

- The Registration Sensor for remaining paper, contamination, Actuator return failure, or improper installation
- The Registration Sensor for failure: dC330 [077-104] (PL 15.2)
- The connection between the Registration Sensor P/J105 and the MCU PWB P/J407 for short circuit

Reload the machine software (GP 9). If no problems are found, replace the MCU PWB (PL 18.1).

377-901 Exit Sensor 1 Static Jam

BSD-ON:BSD 10.5 - Fusing

When the power was turned ON, the M/C was stopped (Cycle Down/ Shut Down), or when the interlocks were closed (all interlocks including options), the Fuser Exit Sensor detected paper.

NOTE: *When turning the power OFF, turn OFF the power switch first and then the main power switch.*

Procedure

Check the following:

- The Fuser Exit Sensor for remaining paper, contamination, Actuator return failure, or improper installation
- The Fuser Exit Sensor for failure: dC330 [077-101] (PL 7.1)
- Turn the power OFF. Go to the Wirenets. Check the connection between the Fuser Assembly DP/DJ612 and the MCU PWB P/J408 for short circuit

Reload the machine software (GP 9). If no problems are found, replace the MCU PWB (PL 18.1).

377-902 Exit Sensor 2 Static Jam

BSD-ON:BSD 10.7 - Fused Paper Exit 2

When the power was turned ON, the M/C was stopped (Cycle Down/ Shut Down), or when the interlocks were closed (all interlocks including options), the Exit 2 Sensor detected paper.

NOTE: *When turning the power OFF, turn OFF the power switch first and then the main power switch.*

Procedure

Check the following:

- The Exit 2 Sensor for remaining paper, contamination, Actuator return failure, or improper installation
- The Exit 2 Sensor for failure: dC330 [077-100] (PL 17.4)
- The connection between the Exit 2 Sensor P/J111 and the MCU PWB P/J407 for short circuit
- The L/H High Cover Assembly for damage or mismatch

Reload the machine software (GP 9). If no problems are found, replace the MCU PWB (PL 18.1).

377-903 POB Sensor Static Jam

BSD-ON:BSD 9.16 - Image Transfer to Paper

BSD-ON:BSD 9.17 - Stripping

When the power was turned ON, the M/C was stopped (Cycle Down/ Shut Down), or when the interlocks were closed (all interlocks including options), the POB Sensor detected paper.

NOTE: *When turning the power OFF, turn OFF the power switch first and then the main power switch.*

Procedure

Check the following:

- The POB Sensor for remaining paper, contamination, or improper installation
- The POB Sensor for failure: dC330 [077-103] (PL 14.3)
- The connection between the POB Sensor P/J100 and the MCU PWB P/J406 for short circuit

Reload the machine software (GP 9). If no problems are found, replace the MCU PWB (PL 18.1).

377-907 Duplex Wait Sensor Static Jam

BSD-ON:BSD 10.8 - Duplex Transportation

When the power was turned ON, the M/C was stopped (Cycle Down/ Shut Down), or when the interlocks were closed (all interlocks including options), the Duplex Wait Sensor detected paper.

NOTE: *When turning the power OFF, turn OFF the power switch first and then the main power switch.*

Procedure

Check the following:

- The Duplex Wait Sensor for remaining paper, contamination, Actuator return failure, or improper installation
- The Duplex Wait Sensor for failure: dC330 [077-105] (PL 14.5)
- The connection between the Duplex Wait Sensor P/J101 and the MCU PWB P/J406 for short circuit

Reload the machine software (GP 9). If no problems are found, replace the MCU PWB (PL 18.1).

389-600 RC Sample Lateral Fault-A1

BSD-ON:BSD 9.13 - Color Registration Control

There is an error with the Black fast scan position that is used as a reference during A1 (fine adjustment pattern) and C patch detection. (This is a hidden failure. The Color Registration Spec cannot be guaranteed and Data is only recorded in history.)

NOTE: *When turning the power OFF, turn off the Power Switch first and then the Main Power Switch.*

Initial Actions

When multiple failures with Chain 389 occur, take action according to the priority order in the following table. Solving a higher priority failure may sometimes also repair the other failures. (Chain 389 Fault is detected during the execution of Registration Control or Toner Mass/Area (TMA) Gain Correction.)

Table 1 Fault Priority

Priority	Chain Link	Fault Item
1 (High)	389-616	RC Data Over Flow Fault
2	389-604, 389-606, 389-607, 389-609, 389-610, 389-612, 389-654, 389-656	RC Sample Block Fault-B
3	389-601, 389-603	RC Sample Block Fault-A1
4	389-600	RC Sample Lateral Fault-A1
5	389-660,389-662,389-663,389-665	RC Sample Count Fault
6	389-666,389-667	TMA LED Fault
7	389-668,389-669	TMA Threshold Fault
8 (Low)	389-623,389-629	Vsout Stability Fault

Procedure

Check the installation status of the Transfer Belt Unit. **Is the Transfer Belt Unit installed properly?**

Y N

Install the Transfer Belt Unit properly.

Replace the Transfer Belt Unit (PL 6.1). If the problem is not solved, replace the MCU PWB (PL 18.1) and perform ADJ 9.9 Registration Control Setup Cycle.

389-601 RC Sample Block Fault-A1-In

BSD-ON:BSD 9.13 - Color Registration Control

During the A1 (fine adjustment pattern) and C patch detection, the patch at the MOB ADC in Sensor side did not satisfy the defined number of valid sample blocks. (This is a hidden failure. The Color Registration Spec cannot be guaranteed and Data is only recorded in history.)

NOTE:

- *When this Fault occurs, select test pattern no. 003 in dC612 and check the printout of the fine adjustment pattern to estimate the color and position (In/Out).*
- *When turning the power OFF, turn off the Power Switch first and then the Main Power Switch.*

Initial Actions

When multiple failures with Chain 389 occur, take action according to the priority order in the following table. Solving a higher priority failure may sometimes also repair the other failures. (Chain 389 Fault is detected during the execution of Registration Control or Toner Mass/Area (TMA) Gain Correction.)

Table 1 Fault Priority

Priority	Chain Link	Fault Item
1 (High)	389-616	RC Data Over Flow Fault
2	389-604, 389-606, 389-607, 389-609, 389-610, 389-612, 389-613, 389-615	RC Sample Block Fault-B
3	389-601, 389-603	RC Sample Block Fault-A1
4	389-600	RC Sample Lateral Fault-A1
5	389-660,389-662,389-663,389-665	RC Sample Count Fault
6	389-666,389-667	TMA LED Fault
7	389-668,389-669	TMA Threshold Fault
8 (Low)	389-623,389-629	Vsout Stability Fault

Procedure

Check the density of all the colors.

NOTE: *Check for defects such as deletions from the area close to the Sensor.*

Is the density of all the colors normal?

Y N

Adjust the density of all the colors properly.

Check the Transfer Belt close to the Sensor that is exhibiting the Fault for cracks/scratches and distortion. **Is the Transfer Belt normal?**

Y N

Replace the Transfer Belt (PL 6.1).

A

A

Check the Drum Cartridge (Y, M, C, K) for cracks/scratches and deformation. **Is the Drum Cartridge (Y, M, C, K) normal?**

Y N

Replace any Drum Cartridge) that has any of the problems (PL 8.1).

Is the ROS Assembly secured properly?

Y N

Secure the ROS Assembly properly.

Is the detection part of the MOB ADC in Sensor free from contamination?

Y N

Clean the detection part of the MOB ADC in Sensor.

NOTE: *During cleaning, take care not to bend the Shutter.*

Replace the following parts in sequence. Besides, after replacing the MCU PWB, perform ADJ 9.9 Registration Control Setup Cycle.

- MOB ADC Assembly (PL 18.2) (After replacement, rewrite the value in NVM [760-202] to "1".)
- Transfer Belt Unit (PL 6.1)
- ROS Assembly (PL 2.1)
- MCU PWB (PL 18.1)

389-603 RC Sample Block Fault-A1-Out

BSD-ON:BSD 9.13 - Color Registration Control

During the A1 (fine adjustment pattern) and C patch detection, the patch at the MOB ADC Out Sensor side did not satisfy the defined number of valid sample blocks. (This is a hidden failure. The Color Registration Spec cannot be guaranteed and Data is only recorded in history.)

NOTE:

- *When this Fault occurs, select test pattern no. 003 in dC612 and check the printout of the fine adjustment pattern to estimate the color and position (In/Out).*
- *When turning the power OFF, turn off the Power Switch first and then the Main Power Switch.*

Initial Actions

When multiple failures with Chain 389 occur, take action according to the priority order in the following table. Solving a higher priority failure may sometimes also repair the other failures. (Chain 389 Fault is detected during the execution of Registration Control or Toner Mass/Area (TMA) Gain Correction.)

Table 1 Fault Priority

Priority	Chain Link	Fault Item
1 (High)	389-616	RC Data Over Flow Fault
2	389-604, 389-606, 389-607, 389-609, 389-610, 389-612, 389-613, 389-615,	RC Sample Block Fault-B
3	389-601, 389-603	RC Sample Block Fault-A1
4	389-600	RC Sample Lateral Fault-A1
5	389-660,389-662,389-663,389-665	RC Sample Count Fault
6	389-666,389-667	TMA LED Fault
7	389-668,389-669	TMA Threshold Fault
8 (Low)	389-623,389-629	Vsout Stability Fault

Procedure

Check the density of all the colors.

NOTE: *Check for defects such as deletions from the area close to the Sensor.*

Is the density of all the colors normal?

Y N

Adjust the density of all the colors properly.

Check the Transfer Belt close to the Sensor that is exhibiting the Fault for cracks/scratches and distortion. **Is the Transfer Belt normal?**

Y N

Replace the Transfer Belt (PL 6.1).

Check the Drum Cartridge (Y, M, C, K) for cracks/scratches and deformation. **Is the Drum Cartridge (Y, M, C, K) normal?**

Y N

Replace any Drum Cartridge) that has any of the problems (PL 8.1).

Is the ROS Assembly secured properly?

Y N

Secure the ROS Assembly properly.

Is the detection part of the MOB ADC in Sensor free from contamination?

Y N

Clean the detection part of the MOB ADC in Sensor.

NOTE: *During cleaning, take care not to bend the Shutter.*

Replace the following parts in sequence. Besides, after replacing the MCU PWB, perform ADJ 9.9 Registration Control Setup Cycle.

- MOB ADC Assembly (PL 18.2) (After replacement, rewrite the value in NVM [760-202] to "1".)
- Transfer Belt Unit (PL 6.1)
- ROS Assembly (PL 2.1)
- MCU PWB (PL 18.1)

389-604 RC Sample Block Fault-B-#1-In

BSD-ON:BSD 9.13 - Color Registration Control

During the B (rough adjustment pattern) patch detection, the #1 (Magenta) patch at the MOB ADC in Sensor side did not satisfy the defined number of valid sample blocks. (This is a hidden failure. The Color Registration Spec cannot be guaranteed and Data is only recorded in history.)

NOTE:

- *When this Fault occurs, select test pattern no. 004 in dC612 and check the printout of the rough adjustment pattern to estimate the color and position (In/Out).*
- *When turning the power OFF, turn off the Power Switch first and then the Main Power Switch.*

Initial Actions

When multiple failures with Chain 389 occur, take action according to the priority order in the following table. Solving a higher priority failure may sometimes also repair the other failures. (Chain 389 Fault is detected during the execution of Registration Control or Toner Mass/Area (TMA) Gain Correction.)

Table 1 Fault Priority

Priority	Chain Link	Fault Item
1 (High)	389-616	RC Data Over Flow Fault
2	389-604, 389-606, 389-607, 389-609, 389-610, 389-612, 389-613, 389-615,	RC Sample Block Fault-B
3	389-601, 389-603	RC Sample Block Fault-A1
4	389-600	RC Sample Lateral Fault-A1
5	389-660,389-662,389-663,389-665	RC Sample Count Fault
6	389-666,389-667	TMA LED Fault
7	389-668,389-669	TMA Threshold Fault
8 (Low)	389-623,389-629	Vsout Stability Fault

Procedure

Check the density of M color.

NOTE: *Check for defects such as deletions from the area close to the Sensor.*

Is the density of M color normal?

Y N

Adjust to correct the density of M color.

Check the connection between the MOB ADC in Sensor P/J130 and the MCU PWB P/J417 for connector disconnection, open circuit, short circuit, and poor contact. **Is the connection normal?**

Y N

Connect the MOB ADC in Sensor P/J130 to the MCU PWB P/J417 properly.

A

A

Check the Transfer Belt close to the Sensor that is exhibiting the Fault for cracks/scratches and distortion. **Is the Transfer Belt normal?**

Y N

Replace the Transfer Belt (PL 6.1).

Is the Drum Cartridge (M) for cracks/scratches and deformation. **Is the Drum Cartridge (M) normal?**

Y N

Replace the Drum Cartridge (M) (PL 8.1).

Is the ROS Assembly secured properly?

Y N

Secure the ROS Assembly properly.

Is the detection part of the MOB ADC in Sensor free from contamination?

Y N

Clean the detection part of the MOB ADC in Sensor.

NOTE: *During cleaning, take care not to bend the Shutter.*

Replace the following parts in sequence. Besides, after replacing the MCU PWB, perform ADJ 9.9 Registration Control Setup Cycle.

- MOB ADC Assembly (PL 18.2) (After replacement, rewrite the value in NVM [760-202] to "1".
- Transfer Belt Unit (PL 6.1)
- ROS Assembly (PL 2.1)
- MCU PWB (PL 18.1)

389-606 RC Sample Block Fault-B-#1-Out

BSD-ON:BSD 9.13 - Color Registration Control

During the B (rough adjustment pattern) patch detection, the #1 (Magenta) patch at the MOB ADC Out Sensor side did not satisfy the defined number of valid sample blocks. (This is a hidden failure. The Color Registration Spec cannot be guaranteed and Data is only recorded in history.)

NOTE:

- *When this Fault occurs, select test pattern no. 004 in dC612 and check the printout of the rough adjustment pattern to estimate the color and position (In/Out).*
- *When turning the power OFF, turn off the Power Switch first and then the Main Power Switch.*

Initial Actions

When multiple failures with Chain 389 occur, take action according to the priority order in the following table. Solving a higher priority failure may sometimes also repair the other failures. (Chain 389 Fault is detected during the execution of Registration Control or Toner Mass/Area (TMA) Gain Correction.)

Table 1 Fault Priority

Priority	Chain Link	Fault Item
1 (High)	389-616	RC Data Over Flow Fault
2	389-604, 389-606, 389-607, 389-609, 389-610, 389-612, 389-613, 389-615,	RC Sample Block Fault-B
3	389-601, 389-603	RC Sample Block Fault-A1
4	389-600	RC Sample Lateral Fault-A1
5	389-660,389-662,389-663,389-665	RC Sample Count Fault
6	389-666,389-667	TMA LED Fault
7	389-668,389-669	TMA Threshold Fault
8 (Low)	389-623,389-629	Vsout Stability Fault

Procedure

Check the density of M color.

NOTE: *Check for defects such as deletions from the area close to the Sensor.*

Is the density of M color normal?

Y N

Adjust to correct the density of M color.

Check the connection between the MOB ADC in Sensor P/J130 and the MCU PWB P/J417 for connector disconnection, open circuit, short circuit, and poor contact. **Is the connection normal?**

Y N

Connect the MOB ADC in Sensor P/J130 to the MCU PWB P/J417 properly.

A

A

Check the Transfer Belt close to the Sensor that is exhibiting the Fault for cracks/scratches and distortion. **Is the Transfer Belt normal?**

Y N

Replace the Transfer Belt (PL 6.1).

Is the Drum Cartridge (M) for cracks/scratches and deformation. **Is the Drum Cartridge (M) normal?**

Y N

Replace the Drum Cartridge (M) (PL 8.1).

Is the ROS Assembly secured properly?

Y N

Secure the ROS Assembly properly.

Is the detection part of the MOB ADC in Sensor free from contamination?

Y N

Clean the detection part of the MOB ADC in Sensor.

NOTE: *During cleaning, take care not to bend the Shutter.*

Replace the following parts in sequence. Besides, after replacing the MCU PWB, ADJ 9.9 Registration Control Setup Cycle.

- MOB ADC Assembly (PL 18.2) (After replacement, rewrite the value in NVM [760-202] to "1".
- Transfer Belt Unit (PL 6.1)
- ROS Assembly (PL 2.1)
- MCU PWB (PL 18.1)

389-607 RC Sample Block Fault-B-#2-In

BSD-ON:BSD 9.13 - Color Registration Control

During the B (rough adjustment pattern) patch detection, the #2 (Cyan) patch at the MOB ADC in Sensor side did not satisfy the defined number of valid sample blocks. (This is a hidden failure. The Color Registration Spec cannot be guaranteed and Data is only recorded in history.)

NOTE:

- *When this Fault occurs, select test pattern no. 004 in dC612 and check the printout of the rough adjustment pattern to estimate the color and position (In/Out).*
- *When turning the power OFF, turn off the Power Switch first and then the Main Power Switch.*

Initial Actions

When multiple failures with Chain 389 occur, take action according to the priority order in the following table. Solving a higher priority failure may sometimes also repair the other failures. (Chain 389 Fault is detected during the execution of Registration Control or Toner Mass/Area (TMA) Gain Correction.)

Table 1 Fault Priority

Priority	Chain Link	Fault Item
1 (High)	389-616	RC Data Over Flow Fault
2	389-604, 389-606, 389-607, 389-609, 389-610, 389-612, 389-613, 389-615,	RC Sample Block Fault-B
3	389-601, 389-603	RC Sample Block Fault-A1
4	389-600	RC Sample Lateral Fault-A1
5	389-660,389-662,389-663,389-665	RC Sample Count Fault
6	389-666,389-667	TMA LED Fault
7	389-668,389-669	TMA Threshold Fault
8 (Low)	389-623,389-629	Vsout Stability Fault

Procedure

Check the density of C color.

NOTE: *Check for defects such as deletions from the area close to the Sensor.*

Is the density of C color normal?

Y N

Adjust to correct the density of C color.

Check the connection between the MOB ADC in Sensor P/J130 and the MCU PWB P/J417 for connector disconnection, open circuit, short circuit, and poor contact. **Is the connection normal?**

Y N

Connect the MOB ADC in Sensor P/J130 to the MCU PWB P/J417 properly.

Check the Transfer Belt close to the Sensor that is exhibiting the Fault for cracks/scratches and distortion. **Is the Transfer Belt normal?**

Y N

Replace the Transfer Belt (PL 6.1).

Is the Drum Cartridge (C) for cracks/scratches and deformation. **Is the Drum Cartridge (C) normal?**

Y N

Replace the Drum Cartridge (C) (PL 8.1).

Is the ROS Assembly secured properly?

Y N

Secure the ROS Assembly properly.

Is the detection part of the MOB ADC In Sensor free from contamination?

Y N

Clean the detection part of the MOB ADC in Sensor.

NOTE: *During cleaning, take care not to bend the Shutter.*

Replace the following parts in sequence. Besides, after replacing the MCU PWB, perform ADJ 9.9 Registration Control Setup Cycle.

- MOB ADC Assembly (PL 18.2) (After replacement, rewrite the value in NVM [760-202] to "1".
- Transfer Belt Unit (PL 6.1)
- ROS Assembly (PL 2.1)
- MCU PWB (PL 18.1)

389-609 RC Sample Block Fault-B-#2-Out

BSD-ON:BSD 9.13 - Color Registration Control

During the B (rough adjustment pattern) patch detection, the #2 (Cyan) patch at the MOB ADC Out Sensor side did not satisfy the defined number of valid sample blocks. (This is a hidden failure. The Color Registration Spec cannot be guaranteed and Data is only recorded in history.)

NOTE:

- *When this Fault occurs, select test pattern no. 004 in dC612 and check the printout of the rough adjustment pattern to estimate the color and position (In/Out).*
- *When turning the power OFF, turn off the Power Switch first and then the Main Power Switch.*

Initial Actions

When multiple failures with Chain 389 occur, take action according to the priority order in the following table. Solving a higher priority failure may sometimes also repair the other failures. (Chain 389 Fault is detected during the execution of Registration Control or Toner Mass/Area (TMA) Gain Correction.)

Table 1 Fault Priority

Priority	Chain Link	Fault Item
1 (High)	389-616	RC Data Over Flow Fault
2	389-604, 389-606, 389-607, 389-609, 389-610, 389-612, 389-613, 389-615,	RC Sample Block Fault-B
3	389-601, 389-603	RC Sample Block Fault-A1
4	389-600	RC Sample Lateral Fault-A1
5	389-660,389-662,389-663,389-665	RC Sample Count Fault
6	389-666,389-667	TMA LED Fault
7	389-668,389-669	TMA Threshold Fault
8 (Low)	389-623,389-629	Vsout Stability Fault

Procedure

Check the density of C color.

NOTE: *Check for defects such as deletions from the area close to the Sensor.*

Is the density of C color normal?

Y N

Adjust to correct the density of C color.

Check the connection between the MOB ADC Out Sensor P/J132 and the MCU PWB P/J417 for connector disconnection, open circuit, short circuit, and poor contact. **Is the connection normal?**

Y N

Connect the MOB ADC Out Sensor P/J132 to the MCU PWB P/J417 properly.

A

A

Check the Transfer Belt close to the Sensor that is exhibiting the Fault for cracks/scratches and distortion. **Is the Transfer Belt normal?**

Y N

Replace the Transfer Belt (PL 6.1).

Is the Drum Cartridge (C) for cracks/scratches and deformation. **Is the Drum Cartridge (C) normal?**

Y N

Replace the Drum Cartridge (C) (PL 8.1).

Is the ROS Assembly secured properly?

Y N

Secure the ROS Assembly properly.

Is the detection part of the MOB ADC in Sensor free from contamination?

Y N

Clean the detection part of the MOB ADC in Sensor.

NOTE: *During cleaning, take care not to bend the Shutter.*

Replace the following parts in sequence. Besides, after replacing the MCU PWB, perform ADJ 9.9 Registration Control Setup Cycle.

- MOB ADC Assembly (PL 18.2) (After replacement, rewrite the value in NVM [760-202] to "1".
- Transfer Belt Unit (PL 6.1)
- ROS Assembly (PL 2.1)
- MCU PWB (PL 18.1)

389-610 RC Sample Block Fault-B-#3-In

BSD-ON:BSD 9.13 - Color Registration Control

During the B (rough adjustment pattern) patch detection, the #3 (Black) patch at the MOB ADC in Sensor side did not satisfy the defined number of valid sample blocks. (This is a hidden failure. The Color Registration Spec cannot be guaranteed and Data is only recorded in history.)

NOTE:

- *When this Fault occurs, select test pattern no. 004 in dC612 and check the printout of the rough adjustment pattern to estimate the color and position (In/Out).*
- *When turning the power OFF, turn off the Power Switch first and then the Main Power Switch.*

Initial Actions

When multiple failures with Chain 389 occur, take action according to the priority order in the following table. Solving a higher priority failure may sometimes also repair the other failures. (Chain 389 Fault is detected during the execution of Registration Control or Toner Mass/Area (TMA) Gain Correction.)

Table 1 Fault Priority

Priority	Chain Link	Fault Item
1 (High)	389-616	RC Data Over Flow Fault
2	389-604, 389-606, 389-607, 389-609, 389-610, 389-612, 389-613, 389-615,	RC Sample Block Fault-B
3	389-601, 389-603	RC Sample Block Fault-A1
4	389-600	RC Sample Lateral Fault-A1
5	389-660,389-662,389-663,389-665	RC Sample Count Fault
6	389-666,389-667	TMA LED Fault
7	389-668,389-669	TMA Threshold Fault
8 (Low)	389-623,389-629	Vsout Stability Fault

Procedure

Check the density of K color.

NOTE: *Check for defects such as deletions from the area close to the Sensor.*

Is the density of K color normal?

Y N

Adjust to correct the density of K color.

Check the connection between the MOB ADC in Sensor P/J130 and the MCU PWB P/J417 for connector disconnection, open circuit, short circuit, and poor contact. **Is the connection normal?**

Y N

Connect the MOB ADC in Sensor P/J130 to the MCU PWB P/J417 properly.

Check the Transfer Belt close to the Sensor that is exhibiting the Fault for cracks/scratches and distortion. **Is the Transfer Belt normal?**

Y N

Replace the Transfer Belt (PL 6.1).

Is the Drum Cartridge (K) for cracks/scratches and deformation. **Is the Drum Cartridge (K) normal?**

Y N

Replace the Drum Cartridge (K) (PL 8.1).

Is the ROS Assembly secured properly?

Y N

Secure the ROS Assembly properly.

Is the detection part of the MOB ADC in Sensor free from contamination?

Y N

Clean the detection part of the MOB ADC in Sensor.

NOTE: *During cleaning, take care not to bend the Shutter.*

Replace the following parts in sequence. Besides, after replacing the MCU PWB, perform ADJ 9.9 Registration Control Setup Cycle.

- MOB ADC Assembly (PL 18.2) (After replacement, rewrite the value in NVM [760-202] to "1".
- Transfer Belt Unit (PL 6.1)
- ROS Assembly (PL 2.1)
- MCU PWB (PL 18.1)

389-612 RC Sample Block Fault-B-#3-Out

BSD-ON:BSD 9.13 - Color Registration Control

During the B (rough adjustment pattern) patch detection, the #3 (Black) patch at the MOB ADC Out Sensor side did not satisfy the defined number of valid sample blocks. (This is a hidden failure. The Color Registration Spec cannot be guaranteed and Data is only recorded in history.)

NOTE:

- *When this Fault occurs, select test pattern no. 004 in dC612 and check the printout of the rough adjustment pattern to estimate the color and position (In/Out).*
- *When turning the power OFF, turn off the Power Switch first and then the Main Power Switch.*

Initial Actions

When multiple failures with Chain 389 occur, take action according to the priority order in the following table. Solving a higher priority failure may sometimes also repair the other failures. (Chain 389 Fault is detected during the execution of Registration Control or Toner Mass/Area (TMA) Gain Correction.)

Table 1 Fault Priority

Priority	Chain Link	Fault Item
1 (High)	389-616	RC Data Over Flow Fault
2	389-604, 389-606, 389-607, 389-609, 389-610, 389-612, 389-613, 389-615,	RC Sample Block Fault-B
3	389-601, 389-603	RC Sample Block Fault-A1
4	389-600	RC Sample Lateral Fault-A1
5	389-660,389-662,389-663,389-665	RC Sample Count Fault
6	389-666,389-667	TMA LED Fault
7	389-668,389-669	TMA Threshold Fault
8 (Low)	389-623,389-629	Vsout Stability Fault

Procedure

Check the density of K color.

NOTE: *Check for defects such as deletions from the area close to the Sensor.*

Is the density of K color normal?

Y N

Adjust to correct the density of K color.

Check the connection between the MOB ADC Out Sensor P/J132 and the MCU PWB P/J417 for connector disconnection, open circuit, short circuit, and poor contact. **Is the connection normal?**

Y N

Connect the MOB ADC Out Sensor P/J132 to the MCU PWB P/J417 properly.

A

A

Check the Transfer Belt close to the Sensor that is exhibiting the Fault for cracks/scratches and distortion. **Is the Transfer Belt normal?**

Y N

Replace the Transfer Belt (PL 6.1).

Is the Drum Cartridge (K) for cracks/scratches and deformation. **Is the Drum Cartridge (K) normal?**

Y N

Replace the Drum Cartridge (K) (PL 8.1).

Is the ROS Assembly secured properly?

Y N

Secure the ROS Assembly properly.

Is the detection part of the MOB ADC in Sensor free from contamination?

Y N

Clean the detection part of the MOB ADC in Sensor.

NOTE: *During cleaning, take care not to bend the Shutter.*

Replace the following parts in sequence. Besides, after replacing the MCU PWB, perform ADJ 9.9 Registration Control Setup Cycle.

- MOB ADC Assembly (PL 18.2) (After replacement, rewrite the value in NVM [760-202] to “1”.
- Transfer Belt Unit (PL 6.1)
- ROS Assembly (PL 2.1)
- MCU PWB (PL 18.1)

389-616 RC Data Over Flow Fault

BSD-ON:BSD 9.13 - Color Registration Control

The correction setting value of calculation result has exceeded the settable range. (This is a hidden failure. The Color Registration Spec cannot be guaranteed and Data is only recorded in history.)

NOTE: *When turning the power OFF, turn off the Power Switch first and then the Main Power Switch.*

Initial Actions

When multiple failures with Chain 389 occur, take action according to the priority order in the following table. Solving a higher priority failure may sometimes also repair the other failures. (Chain 389 Fault is detected during the execution of Registration Control or Toner Mass/Area (TMA) Gain Correction.)

Table 1 Fault Priority

Priority	Chain Link	Fault Item
1 (High)	389-616	RC Data Over Flow Fault
2	389-604, 389-606, 389-607, 389-609, 389-610, 389-612, 389-613, 389-615,	RC Sample Block Fault-B
3	389-601, 389-603	RC Sample Block Fault-A1
4	389-600	RC Sample Lateral Fault-A1
5	389-660,389-662,389-663,389-665	RC Sample Count Fault
6	389-666,389-667	TMA LED Fault
7	389-668,389-669	TMA Threshold Fault
8 (Low)	389-623,389-629	Vsout Stability Fault

Procedure

Display the adjustment amount in ADJ 9.9 Registration Control Setup Cycle. Check which item has reached the maximum adjustment amount shown in the following table.

Table 2 Registration Control Setup Cycle

Correction item	Adjustment Range	
	MIN	MAX
Fast Scan Margin (XSO Margin)	-128	+127
Slow Scan Margin (Y Margin)	-100	+100
Fast Scan Overall Magnification	-653	0*1

The correction amount of Fast Scan Overall Magnification for one color is always “0” (max). If the result of the calculation of the correction amount for any other color is less than "-653”, this Fault occurs. **Is the item that has reached the adjustment range (MIN or MAX), "Fast Scan Margin" or "Slow Scan Margin"?**

Y N

Is the ROS Assembly secured properly?

A

A

Y N

Secure the ROS Assembly properly.

Replace the following parts in sequence.

- ROS Assembly (PL 2.1)
- Replace the Hard Drive ([PL 35.2])
- SBC PWB (PL 35.2)

Is the item that has reached the adjustment range (MIN or MAX) "Slow Scan Margin"?

Y N

Is the ROS Assembly secured properly?

Y N

Secure the ROS Assembly properly.

Replace the following parts in sequence.

- ROS Assembly (PL 2.1)
- Transfer Belt Unit (PL 6.1)
- Replace the Hard Drive ([PL 35.2])
- SBC PWB (PL 35.2)

Replace the MCU PWB (PL 18.1) and perform ADJ 9.9 Registration Control Setup Cycle

389-623 Vsout Stability Fault-In

BSD-ON:BSD 9.13 - Color Registration Control

Reflected light amount was not stabilized during MOB ADC Sensor LED light amount correction at In side. (This is a hidden failure. The Color Registration Spec cannot be guaranteed and Data is only recorded in history.)

NOTE: *When turning the power OFF, turn off the Power Switch first and then the Main Power Switch.*

Initial Actions

When multiple failures with Chain 389 occur, take action according to the priority order in the following table. Solving a higher priority failure may sometimes also repair the other failures. (Chain 389 Fault is detected during the execution of Registration Control or Toner Mass/Area (TMA) Gain Correction.)

Table 1 Fault Priority

Priority	Chain Link	Fault Item
1 (High)	389-616	RC Data Over Flow Fault
2	389-604, 389-606, 389-607, 389-609, 389-610, 389-612, 389-613, 389-615,	RC Sample Block Fault-B
3	389-601, 389-603	RC Sample Block Fault-A1
4	389-600	RC Sample Lateral Fault-A1
5	389-660,389-662,389-663,389-665	RC Sample Count Fault
6	389-666,389-667	TMA LED Fault
7	389-668,389-669	TMA Threshold Fault
8 (Low)	389-623,389-629	Vsout Stability Fault

Procedure

Check the Transfer Belt close to the Sensor that is exhibiting the Fault for cracks/scratches and distortion. **Is the Transfer Belt normal?**

Y N

Replace the Transfer Belt (PL 6.1).

Is the detection part of the MOB ADC in Sensor free from contamination?

Y N

Clean the detection part of the MOB ADC in Sensor.

NOTE: *During cleaning, take care not to bend the Shutter.*

Replace the following parts in sequence.

- MOB ADC Assembly (PL 18.2) (After replacement, rewrite the value in NVM [760-202] to “1”.)
- Transfer Belt Unit (PL 6.1)
- MCU PWB (PL 18.1)

389-629 Vsout Stability Fault-Out

BSD-ON:BSD 9.13 - Color Registration Control

Reflected light amount was not stabilized during MOB ADC Sensor LED light amount correction at Out side. (This is a hidden failure. The Color Registration Spec cannot be guaranteed and Data is only recorded in history.)

NOTE: *When turning the power OFF, turn off the Power Switch first and then the Main Power Switch.*

Initial Actions

When multiple failures with Chain 389 occur, take action according to the priority order in the following table. Solving a higher priority failure may sometimes also repair the other failures. (Chain 389 Fault is detected during the execution of Registration Control or Toner Mass/Area (TMA) Gain Correction.)

Table 1 Fault Priority

Priority	Chain Link	Fault Item
1 (High)	389-616	RC Data Over Flow Fault
2	389-604, 389-606, 389-607, 389-609, 389-610, 389-612, 389-613, 389-615,	RC Sample Block Fault-B
3	389-601, 389-603	RC Sample Block Fault-A1
4	389-600	RC Sample Lateral Fault-A1
5	389-660,389-662,389-663,389-665	RC Sample Count Fault
6	389-666,389-667	TMA LED Fault
7	389-668,389-669	TMA Threshold Fault
8 (Low)	389-623,389-629	Vsout Stability Fault

Procedure

Check the Transfer Belt close to the Sensor that is exhibiting the Fault for cracks/scratches and distortion. **Is the Transfer Belt normal?**

Y N

Replace the Transfer Belt (PL 6.1).

Is the detection part of the MOB ADC in Sensor free from contamination?

Y N

Clean the detection part of the MOB ADC in Sensor.

NOTE: *During cleaning, take care not to bend the Shutter.*

Replace the following parts in sequence.

- MOB ADC Assembly (PL 18.2) (After replacement, rewrite the value in NVM [760-202] to “1”.)
- Transfer Belt Unit (PL 6.1)
- MCU PWB (PL 18.1)

389-654 RC Sample Block Fault-B-#0-In

BSD-ON:BSD 9.13 - Color Registration Control

During the B (rough adjustment pattern) patch detection, the #0 (Yellow) patch at the MOB ADC in Sensor side did not satisfy the defined number of valid sample blocks. (This is a hidden failure. The Color Registration Spec cannot be guaranteed and Data is only recorded in history.)

NOTE:

- *When this Fault occurs, select test pattern no. 004 in dC612 and check the printout of the rough adjustment pattern to estimate the color and position (In/Out).*
- *When turning the power OFF, turn off the Power Switch first and then the Main Power Switch.*

Initial Actions

When multiple failures with Chain 389 occur, take action according to the priority order in the following table. Solving a higher priority failure may sometimes also repair the other failures. (Chain 389 Fault is detected during the execution of Registration Control or Toner Mass/Area (TMA) Gain Correction.)

Table 1 Fault Priority

Priority	Chain Link	Fault Item
1 (High)	389-616	RC Data Over Flow Fault
2	389-604, 389-606, 389-607, 389-609, 389-610, 389-612, 389-613, 389-615,	RC Sample Block Fault-B
3	389-601, 389-603	RC Sample Block Fault-A1
4	389-600	RC Sample Lateral Fault-A1
5	389-660,389-662,389-663,389-665	RC Sample Count Fault
6	389-666,389-667	TMA LED Fault
7	389-668,389-669	TMA Threshold Fault
8 (Low)	389-623,389-629	Vsout Stability Fault

Procedure

Check the density of Y color.

NOTE: *Check for defects such as deletions from the area close to the Sensor.*

Is the density of Y color normal?

Y N

Adjust to correct the density of Y color.

Check the connection between the MOB ADC in Sensor P/J130 and the MCU PWB P/J417 for connector disconnection, open circuit, short circuit, and poor contact. **Is the connection normal?**

Y N

Connect the MOB ADC in Sensor P/J130 to the MCU PWB P/J417 properly.

A

A

Check the Transfer Belt close to the Sensor that is exhibiting the Fault for cracks/scratches and distortion. **Is the Transfer Belt normal?**

Y N

Replace the Transfer Belt (PL 6.1).

Is the Drum Cartridge (Y) for cracks/scratches and deformation. **Is the Drum Cartridge (Y) normal?**

Y N

Replace the Drum Cartridge (Y) (PL 8.1).

Is the ROS Assembly secured properly?

Y N

Secure the ROS Assembly properly.

Is the detection part of the MOB ADC in Sensor free from contamination?

Y N

Clean the detection part of the MOB ADC in Sensor.

NOTE: *During cleaning, take care not to bend the Shutter.*

Replace the following parts in sequence. Besides, after replacing the MCU PWB, perform ADJ 9.9 Registration Control Setup Cycle.

- MOB ADC Assembly (PL 18.2) (After replacement, rewrite the value in NVM [760-202] to "1".
- Transfer Belt Unit (PL 6.1)
- ROS Assembly (PL 2.1)
- MCU PWB (PL 18.1)

389-656 RC Sample Block Fault-B-#0-Out

BSD-ON:BSD 9.13 - Color Registration Control

During the B (rough adjustment pattern) patch detection, the #0 (Yellow) patch at the MOB ADC Out Sensor side did not satisfy the defined number of valid sample blocks. (This is a hidden failure. The Color Registration Spec cannot be guaranteed and Data is only recorded in history.)

NOTE:

- *When this Fault occurs, select test pattern no. 004 in dC612 and check the printout of the rough adjustment pattern to estimate the color and position (In/Out).*
- *When turning the power OFF, turn off the Power Switch first and then the Main Power Switch.*

Initial Actions

When multiple failures with Chain 389 occur, take action according to the priority order in the following table. Solving a higher priority failure may sometimes also repair the other failures. (Chain 389 Fault is detected during the execution of Registration Control or Toner Mass/Area (TMA) Gain Correction.)

Table 1 Fault Priority

Priority	Chain Link	Fault Item
1 (High)	389-616	RC Data Over Flow Fault
2	389-604, 389-606, 389-607, 389-609, 389-610, 389-612, 389-613, 389-615,	RC Sample Block Fault-B
3	389-601, 389-603	RC Sample Block Fault-A1
4	389-600	RC Sample Lateral Fault-A1
5	389-660,389-662,389-663,389-665	RC Sample Count Fault
6	389-666,389-667	TMA LED Fault
7	389-668,389-669	TMA Threshold Fault
8 (Low)	389-623,389-629	Vsout Stability Fault

Procedure

Check the density of Y color.

NOTE: *Check for defects such as deletions from the area close to the Sensor.*

Is the density of Y color normal?

Y N

Adjust to correct the density of Y color.

Check the connection between the MOB ADC Out Sensor P/J132 and the MCU PWB P/J417 for connector disconnection, open circuit, short circuit, and poor contact. **Is the connection normal?**

Y N

Connect the MOB ADC Out Sensor P/J132 to the MCU PWB P/J417 properly.

A

A

Check the Transfer Belt close to the Sensor that is exhibiting the Fault for cracks/scratches and distortion. **Is the Transfer Belt normal?**

Y N

Replace the Transfer Belt (PL 6.1).

Is the Drum Cartridge (Y) for cracks/scratches and deformation. **Is the Drum Cartridge (Y) normal?**

Y N

Replace the Drum Cartridge (Y) (PL 8.1).

Is the ROS Assembly secured properly?

Y N

Secure the ROS Assembly properly.

Is the detection part of the MOB ADC in Sensor free from contamination?

Y N

Clean the detection part of the MOB ADC in Sensor.

NOTE: *During cleaning, take care not to bend the Shutter.*

Replace the following parts in sequence. Besides, after replacing the MCU PWB, perform ADJ 9.9 Registration Control Setup Cycle.

- MOB ADC Assembly (PL 18.2) (After replacement, rewrite the value in NVM [760-202] to "1".
- Transfer Belt Unit (PL 6.1)
- ROS Assembly (PL 2.1)
- MCU PWB (PL 18.1)

389-660 RC Sample Count Fault-B-In

BSD-ON:BSD 9.13 - Color Registration Control

During the B (rough adjustment pattern) patch detection, the counter at the MOB ADC in Sensor side overflowed. (This is a hidden failure. The Color Registration Spec cannot be guaranteed and Data is only recorded in history.)

NOTE:

- *When this Fault occurs, select test pattern no. 004 in dC612 and check the printout of the rough adjustment pattern to estimate the color and position (In/Out).*
- *When turning the power OFF, turn off the Power Switch first and then the Main Power Switch.*

Initial Actions

When multiple failures with Chain 389 occur, take action according to the priority order in the following table. Solving a higher priority failure may sometimes also repair the other failures. (Chain 389 Fault is detected during the execution of Registration Control or Toner Mass/Area (TMA) Gain Correction.)

Table 1 Fault Priority

Priority	Chain Link	Fault Item
1 (High)	389-616	RC Data Over Flow Fault
2	389-604, 389-606, 389-607, 389-609, 389-610, 389-612, 389-613, 389-615,	RC Sample Block Fault-B
3	389-601, 389-603	RC Sample Block Fault-A1
4	389-600	RC Sample Lateral Fault-A1
5	389-660,389-662,389-663,389-665	RC Sample Count Fault
6	389-666,389-667	TMA LED Fault
7	389-668,389-669	TMA Threshold Fault
8 (Low)	389-623,389-629	Vsout Stability Fault

Procedure

Check the density of all the colors.

NOTE: *Check for defects such as deletions from the area close to the Sensor.*

Is the density of all the colors normal?

Y N

Adjust the density of all the colors properly.

Check for a disconnected connector, an open wire, a short circuit or poor contact between MOB ADC in Sensor P/J130 and MCU PWB P/J417. **Is the connection normal?**

Y N

Make the proper connection between MOB ADC in Sensor P/J130 and MCU PWB P/J417.

Check the Drum Cartridge (Y, M, C, K) for cracks/scratches and deformation. **Is the Drum Cartridge (Y, M, C, K) normal?**

Y N

Replace any Drum Cartridge) that has any of the problems (PL 8.1).

Is the ROS Assembly secured properly?

Y N

Secure the ROS Assembly properly.

Is the detection part of the MOB ADC in Sensor free from contamination?

Y N

Clean the detection part of the MOB ADC in Sensor.

NOTE: *During cleaning, take care not to bend the Shutter.*

Replace the following parts in sequence. Besides, after replacing the MCU PWB, perform ADJ 9.9 Registration Control Setup Cycle

- MOB ADC Assembly (PL 18.2) (After replacement, rewrite the value in NVM [760-202] to "1".)
- Transfer Belt Unit (PL 6.1)
- ROS Assembly (PL 2.1)
- MCU PWB (PL 18.1)

389-662 RC Sample Count Fault-B-Out

BSD-ON:BSD 9.13 - Color Registration Control

During the B (rough adjustment pattern) patch detection, the counter at the MOB ADC Out Sensor side overflowed. (This is a hidden failure. The Color Registration Spec cannot be guaranteed and Data is only recorded in history.)

NOTE:

- *When this Fault occurs, select test pattern no. 004 in dC612 and check the printout of the rough adjustment pattern to estimate the color and position (In/Out).*
- *When turning the power OFF, turn off the Power Switch first and then the Main Power Switch.*

Initial Actions

When multiple failures with Chain 389 occur, take action according to the priority order in the following table. Solving a higher priority failure may sometimes also repair the other failures. (Chain 389 Fault is detected during the execution of Registration Control or Toner Mass/Area (TMA) Gain Correction.)

Table 1 Fault Priority

Priority	Chain Link	Fault Item
1 (High)	389-616	RC Data Over Flow Fault
2	389-604, 389-606, 389-607, 389-609, 389-610, 389-612, 389-613, 389-615,	RC Sample Block Fault-B
3	389-601, 389-603	RC Sample Block Fault-A1
4	389-600	RC Sample Lateral Fault-A1
5	389-660,389-662,389-663,389-665	RC Sample Count Fault
6	389-666,389-667	TMA LED Fault
7	389-668,389-669	TMA Threshold Fault
8 (Low)	389-623,389-629	Vsout Stability Fault

Procedure

Check the density of all the colors.

NOTE: *Check for defects such as deletions from the area close to the Sensor.*

Is the density of all the colors normal?

Y N

Adjust the density of all the colors properly.

Check for a disconnected connector, an open wire, a short circuit or poor contact between MOB ADC Out Sensor P/J132 and MCU PWB P/J417. **Is the connection normal?**

Y N

Make the proper connection between MOB ADC Out Sensor P/J132 and MCU PWB P/J417.

Check the Drum Cartridge (Y, M, C, K) for cracks/scratches and deformation. **Is the Drum Cartridge (Y, M, C, K) normal?**

Y N

Replace any Drum Cartridge) that has any of the problems (PL 8.1).

Is the ROS Assembly secured properly?

Y N

Secure the ROS Assembly properly.

Is the detection part of the MOB ADC Out Sensor free from contamination?

Y N

Clean the detection part of the MOB ADC Out Sensor.

NOTE: *During cleaning, take care not to bend the Shutter.*

Replace the following parts in sequence. Besides, after replacing the MCU PWB, perform ADJ 9.9 Registration Control Setup Cycle

- MOB ADC Assembly (PL 18.2) (After replacement, rewrite the value in NVM [760-202] to "1".)
- Transfer Belt Unit (PL 6.1)
- ROS Assembly (PL 2.1)
- MCU PWB (PL 18.1)

389-663 RC Sample Count Fault-A1-In

BSD-ON:BSD 9.13 - Color Registration Control

During the A1 (rough adjustment pattern) and C patch detection, the counter at the MOB ADC in Sensor side overflowed. (This is a hidden failure. The Color Registration Spec cannot be guaranteed and Data is only recorded in history.)

NOTE:

- *When this Fault occurs, select test pattern no. 003 in dC612 and check the printout of the fine adjustment pattern to estimate the color and position (In/Out).*
- *When turning the power OFF, turn off the Power Switch first and then the Main Power Switch.*

Initial Actions

When multiple failures with Chain 389 occur, take action according to the priority order in the following table. Solving a higher priority failure may sometimes also repair the other failures. (Chain 389 Fault is detected during the execution of Registration Control or Toner Mass/Area (TMA) Gain Correction.)

Table 1 Fault Priority

Priority	Chain Link	Fault Item
1 (High)	389-616	RC Data Over Flow Fault
2	389-604, 389-606, 389-607, 389-609, 389-610, 389-612, 389-613, 389-615,	RC Sample Block Fault-B
3	389-601, 389-603	RC Sample Block Fault-A1
4	389-600	RC Sample Lateral Fault-A1
5	389-660,389-662,389-663,389-665	RC Sample Count Fault
6	389-666,389-667	TMA LED Fault
7	389-668,389-669	TMA Threshold Fault
8 (Low)	389-623,389-629	Vsout Stability Fault

Procedure

Check the density of all the colors.

NOTE: *Check for defects such as deletions from the area close to the Sensor.*

Is the density of all the colors normal?

Y N

Adjust the density of all the colors properly.

Check for a disconnected connector, an open wire, a short circuit or poor contact between MOB ADC in Sensor P/J130 and MCU PWB P/J417. **Is the connection normal?**

Y N

Make the proper connection between MOB ADC in Sensor P/J130 and MCU PWB P/J417.

Check the Drum Cartridge (Y, M, C, K) for cracks/scratches and deformation. **Are the Drum Cartridges OK?**

Y N

Replace any Drum Cartridge that has any of the problems (PL 8.1).

Is the ROS Assembly secured properly?

Y N

Secure the ROS Assembly properly.

Is the detection part of the MOB ADC In Sensor free from contamination?

Y N

Clean the detection part of the MOB ADC In Sensor.

NOTE: *During cleaning, take care not to bend the Shutter.*

Replace the following parts in sequence. Besides, after replacing the MCU PWB, perform ADJ 9.9 Registration Control Setup Cycle

- MOB ADC Assembly (PL 18.2) (After replacement, rewrite the value in NVM [760-202] to "1".)
- Transfer Belt Unit (PL 6.1)
- ROS Assembly (PL 2.1)
- MCU PWB (PL 18.1)

389-665 RC Sample Count Fault-A1-Out

BSD-ON:BSD 9.13 - Color Registration Control

During the A1 (rough adjustment pattern) and C patch detection, the counter at the MOB ADC Out Sensor side overflowed. (This is a hidden failure. The Color Registration Spec cannot be guaranteed and Data is only recorded in history.)

NOTE:

- *When this Fault occurs, select test pattern no. 003 in dC612 and check the printout of the fine adjustment pattern to estimate the color and position (In/Out).*
- *When turning the power OFF, turn off the Power Switch first and then the Main Power Switch.*

Initial Actions

When multiple failures with Chain 389 occur, take action according to the priority order in the following table. Solving a higher priority failure may sometimes also repair the other failures. (Chain 389 Fault is detected during the execution of Registration Control or Toner Mass/Area (TMA) Gain Correction.)

Table 1 Fault Priority

Priority	Chain Link	Fault Item
1 (High)	389-616	RC Data Over Flow Fault
2	389-604, 389-606, 389-607, 389-609, 389-610, 389-612, 389-613, 389-615,	RC Sample Block Fault-B
3	389-601, 389-603	RC Sample Block Fault-A1
4	389-600	RC Sample Lateral Fault-A1
5	389-660,389-662,389-663,389-665	RC Sample Count Fault
6	389-666,389-667	TMA LED Fault
7	389-668,389-669	TMA Threshold Fault
8 (Low)	389-623,389-629	Vsout Stability Fault

Procedure

Check the density of all the colors.

NOTE: *Check for defects such as deletions from the area close to the Sensor.*

Is the density of all the colors normal?

Y N

Adjust the density of all the colors properly.

Check for a disconnected connector, an open wire, a short circuit or poor contact between MOB ADC Out Sensor P/J132 and MCU PWB P/J417. **Is the connection normal?**

Y N

Make the proper connection between MOB ADC Out Sensor P/J132 and MCU PWB P/J417.

Check the Drum Cartridge (Y, M, C, K) for cracks/scratches and deformation. **Is the Drum Cartridge (Y, M, C, K) normal?**

Y N

Replace any Drum Cartridge) that has any of the problems (PL 8.1).

Is the ROS Assembly secured properly?

Y N

Secure the ROS Assembly properly.

Is the detection part of the MOB ADC Out Sensor free from contamination?

Y N

Clean the detection part of the MOB ADC Out Sensor.

NOTE: *During cleaning, take care not to bend the Shutter.*

Replace the following parts in sequence. Besides, after replacing the MCU PWB, perform ADJ 9.9 Registration Control Setup Cycle

- MOB ADC Assembly (PL 18.2) (After replacement, rewrite the value in NVM [760-202] to "1".)
- Transfer Belt Unit (PL 6.1)
- ROS Assembly (PL 2.1)
- MCU PWB (PL 18.1)

389-666 TMA LED Fault-In

BSD-ON:BSD 9.13 - Color Registration Control

MOB ADC In Sensor LED light amount correction at In side did not complete successfully. (This is a hidden failure. The Color Registration Spec cannot be guaranteed and Data is only recorded in history.)

NOTE: *When turning the power OFF, turn off the Power Switch first and then the Main Power Switch.*

Initial Actions

When multiple failures with Chain 389 occur, take action according to the priority order in the following table. Solving a higher priority failure may sometimes also repair the other failures. (Chain 389 Fault is detected during the execution of Registration Control or Toner Mass/Area (TMA) Gain Correction.)

Table 1 Fault Priority

Priority	Chain Link	Fault Item
1 (High)	389-616	RC Data Over Flow Fault
2	389-604, 389-606, 389-607, 389-609, 389-610, 389-612, 389-613, 389-615,	RC Sample Block Fault-B
3	389-601, 389-603	RC Sample Block Fault-A1
4	389-600	RC Sample Lateral Fault-A1
5	389-660,389-662,389-663,389-665	RC Sample Count Fault
6	389-666,389-667	TMA LED Fault
7	389-668,389-669	TMA Threshold Fault
8 (Low)	389-623,389-629	Vsout Stability Fault

Procedure

Check for a disconnected connector, an open wire, a short circuit or poor contact between MOB ADC in Sensor P/J130 and MCU PWB P/J417. **Is the connection normal?**

Y N

Make the proper connection between MOB ADC in Sensor P/J130 and MCU PWB P/J417.

Check the Transfer Belt close to the Sensor that is exhibiting the Fault for cracks/scratches and distortion. **Is the Transfer Belt normal?**

Y N

Replace the Transfer Belt (PL 6.1).

Is the detection part of the MOB ADC in Sensor free from contamination?

Y N

Clean the detection part of the MOB ADC in Sensor.

NOTE: *During cleaning, take care not to bend the Shutter.*

Replace the following parts in sequence.

- MOB ADC Assembly (PL 18.2) (After replacement, rewrite the value in NVM [760-202] to "1".)

- Transfer Belt Unit (PL 6.1)
- MCU PWB (PL 18.1)

389-667 TMA LED Fault-Out

BSD-ON:BSD 9.13 - Color Registration Control

MOB ADC Out Sensor LED light amount correction at Out side did not complete successfully. (This is a hidden failure. The Color Registration Spec cannot be guaranteed and Data is only recorded in history.)

NOTE: *When turning the power OFF, turn off the Power Switch first and then the Main Power Switch.*

Initial Actions

When multiple failures with Chain 389 occur, take action according to the priority order in the following table. Solving a higher priority failure may sometimes also repair the other failures. (Chain 389 Fault is detected during the execution of Registration Control or Toner Mass/Area (TMA) Gain Correction.)

Table 1 Fault Priority

Priority	Chain Link	Fault Item
1 (High)	389-616	RC Data Over Flow Fault
2	389-604, 389-606, 389-607, 389-609, 389-610, 389-612, 389-613, 389-615,	RC Sample Block Fault-B
3	389-601, 389-603	RC Sample Block Fault-A1
4	389-600	RC Sample Lateral Fault-A1
5	389-660,389-662,389-663,389-665	RC Sample Count Fault
6	389-666,389-667	TMA LED Fault
7	389-668,389-669	TMA Threshold Fault
8 (Low)	389-623,389-629	Vsout Stability Fault

Procedure

Check for a disconnected connector, an open wire, a short circuit or poor contact between MOB ADC Out Sensor P/J132 and MCU PWB P/J417. **Is the connection normal?**

Y **N**

Make the proper connection between MOB ADC Out Sensor P/J132 and MCU PWB P/J417.

Check the Transfer Belt close to the Sensor that is exhibiting the Fault for cracks/scratches and distortion. **Is the Transfer Belt normal?**

Y **N**

Replace the Transfer Belt (PL 6.1).

Is the detection part of the MOB ADC Out Sensor free from contamination?

Y **N**

Clean the detection part of the MOB ADC Out Sensor.

NOTE: *During cleaning, take care not to bend the Shutter.*

Replace the following parts in sequence.

- MOB ADC Assembly (PL 18.2) (After replacement, rewrite the value in NVM [760-202] to “1”.)

- Transfer Belt Unit (PL 6.1)
- MCU PWB (PL 18.1)

389-668 TMA Threshold Fault-In

BSD-ON:BSD 9.13 - Color Registration Control

MOB ADC Sensor threshold level settings at In side did not complete successfully. (This is a hidden failure. The Color Registration Spec cannot be guaranteed and Data is only recorded in history.)

NOTE: *When turning the power OFF, turn off the Power Switch first and then the Main Power Switch.*

Initial Actions

When multiple failures with Chain 389 occur, take action according to the priority order in the following table. Solving a higher priority failure may sometimes also repair the other failures. (Chain 389 Fault is detected during the execution of Registration Control or Toner Mass/Area (TMA) Gain Correction.)

Table 1 Fault Priority

Priority	Chain Link	Fault Item
1 (High)	389-616	RC Data Over Flow Fault
2	389-604, 389-606, 389-607, 389-609, 389-610, 389-612, 389-613, 389-615,	RC Sample Block Fault-B
3	389-601, 389-603	RC Sample Block Fault-A1
4	389-600	RC Sample Lateral Fault-A1
5	389-660,389-662,389-663,389-665	RC Sample Count Fault
6	389-666,389-667	TMA LED Fault
7	389-668,389-669	TMA Threshold Fault
8 (Low)	389-623,389-629	Vsout Stability Fault

Procedure

Check the density of K color.

NOTE: *Check for defects such as deletions from the area close to the Sensor.*

Is the density of K color normal?

Y **N**

Adjust the density of K color properly.

Check for a disconnected connector, an open wire, a short circuit or poor contact between MOB ADC in Sensor P/J130 and MCU PWB P/J417. **Is the connection normal?**

Y **N**

Make the proper connection between MOB ADC in Sensor P/J130 and MCU PWB P/J417.

Check the Transfer Belt close to the Sensor that is exhibiting the fault for cracks/scratches and distortion. **Is the Transfer Belt normal?**

Y **N**

Replace the Transfer Belt (PL 6.1).

A

A

Is the detection part of the MOB ADC in Sensor free from contamination?

Y **N**

Clean the detection part of the MOB ADC in Sensor.

NOTE: *During cleaning, take care not to bend the Shutter.*

Replace the following parts in sequence.

- MOB ADC Assembly (PL 18.2) (After replacement, rewrite the value in NVM [760-202] to "1".)
- Transfer Belt Unit (PL 6.1)
- MCU PWB (PL 18.1)

389-669 TMA Threshold Fault-Out

BSD-ON:BSD 9.13 - Color Registration Control

MOB ADC Sensor threshold level settings at Out side did not complete successfully. (This is a hidden failure. The Color Registration Spec cannot be guaranteed and Data is only recorded in history.)

NOTE: *When turning the power OFF, turn off the Power Switch first and then the Main Power Switch.*

Initial Actions

When multiple failures with Chain 389 occur, take action according to the priority order in the following table. Solving a higher priority failure may sometimes also repair the other failures. (Chain 389 Fault is detected during the execution of Registration Control or Toner Mass/Area (TMA) Gain Correction.)

Table 1 Fault Priority

Priority	Chain Link	Fault Item
1 (High)	389-616	RC Data Over Flow Fault
2	389-604, 389-606, 389-607, 389-609, 389-610, 389-612, 389-613, 389-615,	RC Sample Block Fault-B
3	389-601, 389-603	RC Sample Block Fault-A1
4	389-600	RC Sample Lateral Fault-A1
5	389-660,389-662,389-663,389-665	RC Sample Count Fault
6	389-666,389-667	TMA LED Fault
7	389-668,389-669	TMA Threshold Fault
8 (Low)	389-623,389-629	Vsout Stability Fault

Procedure

Check the density of K color.

NOTE: *Check for defects such as deletions from the area close to the Sensor.*

Is the density of K color normal?

Y **N**

Adjust the density of K color properly.

Check for a disconnected connector, an open wire, a short circuit or poor contact between MOB ADC Out Sensor P/J132 and MCU PWB P/J417. **Is the connection normal?**

Y **N**

Make the proper connection between MOB ADC Out Sensor P/J132 and MCU PWB P/J417.

Check the Transfer Belt close to the Sensor that is exhibiting the fault for cracks/scratches and distortion. **Is the Transfer Belt normal?**

Y **N**

Replace the Transfer Belt (PL 6.1).

Is the detection part of the MOB ADC Out Sensor free from contamination?

Y **N**

Clean the detection part of the MOB ADC Out Sensor.

NOTE: *During cleaning, take care not to bend the Shutter.*

Replace the following parts in sequence.

- MOB ADC Assembly (PL 18.2) (After replacement, rewrite the value in NVM [760-202] to “1”.)
- Transfer Belt Unit (PL 6.1)
- MCU PWB (PL 18.1)

391-312 CC HVPS Broken

CC Wire Fail is monitored at every 10ms interval. CC HVPS failure has been detected..

NOTE: *When turning the power OFF, turn OFF the power switch first and then the main power switch.*

Procedure

1. Turn the power OFF and ON.
2. If the fault persists, replace the MCU PWB (PL 18.1).

391-313 CRUM ASIC Communication Fail

Communication error between CPU of the MCU PWB and ASIC was detected.

NOTE: *When turning the power OFF, turn OFF the power switch first and then the main power switch.*

Procedure

1. Turn the power OFF and ON.
2. If the fault persists, replace the MCU PWB (PL 18.1).

391-400 Waste Toner Bottle Near Full

BSD-ON:BSD 9.20 - Waste Toner Disposal

NOTE: *The chain/link fault code for this RAP is an internal machine code and is never displayed or logged in Fault Code History. Use this RAP to troubleshoot persistent machine status conditions that cannot be cleared by performing the indicated process (e.g., loading paper, closing a cover, replacing a CRU, etc). Entry to this RAP is usually via the Machine Status Faults RAP located in the Other Faults section, or a chain/link listing on a BSD.*

The Waste Toner Bottle Full Sensor Near Full state is detected.

Procedure

Replace the Waste Toner Bottle (PL 8.1). If the problem persists, use OF 99-2 RAP and BSD 9.20 - Waste Toner Disposal to check the Waste Toner Bottle Full Sensor and associated circuits.

Repair the wiring, replace the Waste Tone Bottle Sensor (PL 8.1) or replace the MCU PWB (PL 18.1) as required.

391-401 Drum Cartridge K Near Life

BSD-ON:BSD 9.4 - Xero Life Control (C, K)

NOTE: *The chain/link fault code for this RAP is an internal machine code and is never displayed or logged in Fault Code History. Use this RAP to troubleshoot persistent machine status conditions that cannot be cleared by performing the indicated process (e.g., loading paper, closing a cover, replacing a CRU, etc). Entry to this RAP is usually via the Machine Status Faults RAP located in the Other Faults section, or a chain/link listing on a BSD.*

It was detected that the replacement timing for Drum (K) is closer than Pre Near.

Procedure

Replace the following in order:

1. Replace the Drum Cartridge (K) (PL 8.1) (CRUs and Consumables) if it has not already been relaced
2. Reload firmware using GP 9
3. Replace the Drum CRUM Reader (K) (PL 8.2)
4. Replace the MCU PWB (PL 18.1)

391-402 Drum Cartridge K Life Over

BSD-ON:BSD 9.4 - Xero Life Control (C, K)

NOTE: *The chain/link fault code for this RAP is an internal machine code and is never displayed or logged in Fault Code History. Use this RAP to troubleshoot persistent machine status conditions that cannot be cleared by performing the indicated process (e.g., loading paper, closing a cover, replacing a CRU, etc). Entry to this RAP is usually via the Machine Status Faults RAP located in the Other Faults section, or a chain/link listing on a BSD.*

Drum (K) has reached the end of its life span.

Procedure

Replace the following in order:

1. Replace the Drum Cartridge (K) (PL 8.1) (CRUs and Consumables) if it has not already been relaced
2. Reload firmware using GP 9
3. Replace the Drum CRUM Reader (K) (PL 8.2)
4. Replace the MCU PWB (PL 18.1)

391-411 Drum Cartridge Y Near Life

BSD-ON:BSD 9.3 - Xero Life Control (Y, M)

NOTE: *The chain/link fault code for this RAP is an internal machine code and is never displayed or logged in Fault Code History. Use this RAP to troubleshoot persistent machine status conditions that cannot be cleared by performing the indicated process (e.g., loading paper, closing a cover, replacing a CRU, etc). Entry to this RAP is usually via the Machine Status Faults RAP located in the Other Faults section, or a chain/link listing on a BSD.*

It was detected that the replacement timing for Drum (Y) is closer than Pre Near.

Procedure

Replace the following in order:

1. Replace the Drum Cartridge (Y) (PL 8.1) (CRUs and Consumables) if it has not already been relaced
2. Reload firmware using GP 9
3. Replace the Drum CRUM Reader (Y) (PL 8.2)
4. Replace the MCU PWB (PL 18.1)

391-421 Drum Cartridge M Near Life

BSD-ON:BSD 9.3 - Xero Life Control (Y, M)

NOTE: *The chain/link fault code for this RAP is an internal machine code and is never displayed or logged in Fault Code History. Use this RAP to troubleshoot persistent machine status conditions that cannot be cleared by performing the indicated process (e.g., loading paper, closing a cover, replacing a CRU, etc). Entry to this RAP is usually via the Machine Status Faults RAP located in the Other Faults section, or a chain/link listing on a BSD.*

It was detected that the replacement timing for Drum (M) is closer than Pre Near.

Procedure

Replace the following in order:

1. Replace the Drum Cartridge (M) (PL 8.1) (CRUs and Consumables) if it has not already been relaced
2. Reload firmware using GP 9
3. Replace the Drum CRUM Reader (M) (PL 8.2)
4. Replace the MCU PWB (PL 18.1)

391-431 Drum Cartridge C Near Life

BSD-ON:BSD 9.4 - Xero Life Control (C, K)

NOTE: *The chain/link fault code for this RAP is an internal machine code and is never displayed or logged in Fault Code History. Use this RAP to troubleshoot persistent machine status conditions that cannot be cleared by performing the indicated process (e.g., loading paper, closing a cover, replacing a CRU, etc). Entry to this RAP is usually via the Machine Status Faults RAP located in the Other Faults section, or a chain/link listing on a BSD.*

It was detected that the replacement timing for Drum (C) is closer than Pre Near.

Procedure

Replace the following in order:

1. Replace the Drum Cartridge (C) (PL 8.1) (CRUs and Consumables) if it has not already been relaced
2. Reload firmware using GP 9
3. Replace the Drum CRUM Reader (C) (PL 8.2)
4. Replace the MCU PWB (PL 18.1)

391-480 Drum Cartridge Y Life Over

BSD-ON:BSD 9.3 - Xero Life Control (Y, M)

NOTE: *The chain/link fault code for this RAP is an internal machine code and is never displayed or logged in Fault Code History. Use this RAP to troubleshoot persistent machine status conditions that cannot be cleared by performing the indicated process (e.g., loading paper, closing a cover, replacing a CRU, etc). Entry to this RAP is usually via the Machine Status Faults RAP located in the Other Faults section, or a chain/link listing on a BSD.*

It was detected that the life for Drum (Y) is over.

Procedure

Replace the following in order:

1. Replace the Drum Cartridge (Y) (PL 8.1) (CRUs and Consumables) if it has not already been relaced
2. Reload firmware using GP 9
3. Replace the Drum CRUM Reader (Y) (PL 8.2)
4. Replace the MCU PWB (PL 18.1)

391-481 Drum Cartridge M Life Over

BSD-ON:BSD 9.3 - Xero Life Control (Y, M)

NOTE: *The chain/link fault code for this RAP is an internal machine code and is never displayed or logged in Fault Code History. Use this RAP to troubleshoot persistent machine status conditions that cannot be cleared by performing the indicated process (e.g., loading paper, closing a cover, replacing a CRU, etc). Entry to this RAP is usually via the Machine Status Faults RAP located in the Other Faults section, or a chain/link listing on a BSD.*

It was detected that the life for Drum (M) is over.

Procedure

Replace the following in order:

1. Replace the Drum Cartridge (M) (PL 8.1) (CRUs and Consumables) if it has not already been relaced
2. Reload firmware using GP 9
3. Replace the Drum CRUM Reader (M) (PL 8.2)
4. Replace the MCU PWB (PL 18.1)

391-482 Drum Cartridge C Life Over

BSD-ON:BSD 9.4 - Xero Life Control (C, K)

NOTE: *The chain/link fault code for this RAP is an internal machine code and is never displayed or logged in Fault Code History. Use this RAP to troubleshoot persistent machine status conditions that cannot be cleared by performing the indicated process (e.g., loading paper, closing a cover, replacing a CRU, etc). Entry to this RAP is usually via the Machine Status Faults RAP located in the Other Faults section, or a chain/link listing on a BSD.*

It was detected that the life for Drum (C) is over.

Procedure

Replace the following in order:

1. Replace the Drum Cartridge (C) (PL 8.1) (CRUs and Consumables) if it has not already been relaced
2. Reload firmware using GP 9
3. Replace the Drum CRUM Reader (C) (PL 8.2)
4. Replace the MCU PWB (PL 18.1)

391-910 Waste Toner Bottle Not In Position

BSD-ON:BSD 9.20 - Waste Toner Disposal

NOTE: *The chain/link fault code for this RAP is an internal machine code and is never displayed or logged in Fault Code History. Use this RAP to troubleshoot persistent machine status conditions that cannot be cleared by performing the indicated process (e.g., loading paper, closing a cover, replacing a CRU, etc). Entry to this RAP is usually via the Machine Status Faults RAP located in the Other Faults section, or a chain/link listing on a BSD.*

The Waste Toner Bottle is not in the proper position.

Procedure

Check that the Bottle Guide Assembly at the machine side and the Waste Toner Bottle does not have any deformation or foreign substances, and that they are installed properly. **Is the Waste Toner Bottle installed properly?**

Y N

Install the Waste Toner Bottle properly. If there is any deformation, replace the Waste Toner Bottle (PL 8.1) and Bottle Guide Assembly (PL 8.1).

Check the Waste Toner Bottle Position Sensor. Enter dC330 [091-100]. Use a sheet of paper, etc. to block/clear the light path to the Waste Toner Bottle Position Sensor. **Does the display of dC330 [091-100] change between High/Low?**

Y N

Us OF 99-2 RAP and BSD 9.20 - Waste Toner Disposal to check the Waste Toner Bottle Position Sensor.

Replace the MCU PWB (PL 18.1).

391-911 Waste Toner Bottle Full

BSD-ON:BSD 9.20 - Waste Toner Disposal

NOTE: *The chain/link fault code for this RAP is an internal machine code and is never displayed or logged in Fault Code History. Use this RAP to troubleshoot persistent machine status conditions that cannot be cleared by performing the indicated process (e.g., loading paper, closing a cover, replacing a CRU, etc). Entry to this RAP is usually via the Machine Status Faults RAP located in the Other Faults section, or a chain/link listing on a BSD.*

After the Waste Toner Bottle Near Full has occurred, the PV exceeds the threshold value.

Procedure

Replace the Waste Toner Bottle (PL 8.1). If the problem persists, use OF 99-2 RAP and BSD 9.20 - Waste Toner Disposal to check the Waste Toner Bottle Full Sensor and associated circuits.

Repair the wiring, replace the Waste Tone Bottle Sensor (PL 8.2) or replace the MCU PWB (PL 18.1) as required.

391-913 Drum Cartridge K Life End

BSD-ON:BSD 9.4 - Xero Life Control (C, K)

NOTE: *The chain/link fault code for this RAP is an internal machine code and is never displayed or logged in Fault Code History. Use this RAP to troubleshoot persistent machine status conditions that cannot be cleared by performing the indicated process (e.g., loading paper, closing a cover, replacing a CRU, etc). Entry to this RAP is usually via the Machine Status Faults RAP located in the Other Faults section, or a chain/link listing on a BSD.*

Drum (K) has reached the end of its life span.

Procedure

Replace the following in order:

1. Replace the Drum Cartridge (K) (PL 8.1) (CRUs and Consumables) if it has not already been relaced
2. Reload firmware using GP 9
3. Replace the Drum CRUM Reader (K) (PL 8.2)
4. Replace the MCU PWB (PL 18.1)

391-914 Drum CRUM K Communication Fail

BSD-ON:BSD 9.4 - Xero Life Control (C, K)

Communication failure with Drum (K) was detected.

Procedure

1. Turn the power OFF and ON.
2. Check the following:
   - The connection between the MCU PWB P/J411 and the Drum CRUM Reader (K) P/J123 for an open circuit and poor contact.
   - The connection terminals between the Drum (K) CRUM PWB and the Drum CRUM Reader (K) for damage and foreign substances
   - The Drum (K) CRUM PWB for contamination or disengagement
   - The Drum (K) for improper installation
3. If no problems are found, replace the following parts in sequence:
   a. Drum (K) (PL 8.1) CRUs and Consumables
   b. Drum CRUM Reader (K) (PL 8.2)
   c. MCU PWB (PL 18.1)

391-915 Drum CRUM K Data Broken

BSD-ON: BSD 9.4 - Xero Life Control (C, K)

The system detected that the data written to the Drum (K) and the data read from the Drum (K) do not match.

Procedure

1. Turn the power OFF and ON.
2. Check the following:
   - The connection between the MCU PWB P/J411 and the Drum CRUM Reader (K) P/J123 for an open circuit and poor contact.
   - The connection terminals between the Drum (K) CRUM PWB and the Drum CRUM Reader (K) for damage and foreign substances
   - The Drum (K) CRUM PWB for contamination or disengagement
   - The Drum (K) for improper installation
3. If no problems are found, replace the following parts in sequence:
   a. Drum (K) (PL 8.1) CRUs and Consumables
   b. Drum CRUM Reader (K) (PL 8.2)
   c. MCU PWB (PL 18.1)

391-916 Drum CRUM K Data Mismatch

BSD-ON: BSD 9.4 - Xero Life Control (C, K)

Incorrect authentication area data was detected in Drum (K).

Procedure

1. Turn the power OFF and ON.
2. Check the following:
   - The connection between the MCU PWB P/J411 and the Drum CRUM Reader (K) P/J123 for an open circuit and poor contact.
   - The connection terminals between the Drum (K) CRUM PWB and the Drum CRUM Reader (K) for damage and foreign substances
   - The Drum (K) CRUM PWB for contamination or disengagement
   - The Drum (K) for improper installation
3. If no problems are found, replace the following parts in sequence:
   a. Drum (K) (PL 8.1) CRUs and Consumables
   b. Drum CRUM Reader (K) (PL 8.2)
   c. MCU PWB (PL 18.1)

391-917 Drum CRUM Y Communication Fail

BSD-ON:BSD 9.3 - Xero Life Control (Y, M)

Communication failure with Drum (Y) was detected.

Procedure

1. Turn the power OFF and ON.
2. Check the following:
   - The connection between the MCU PWB P/J411 and the Drum CRUM Reader (Y) P/J120 for an open circuit and poor contact.
   - The connection terminals between the Drum (Y) CRUM PWB and the Drum CRUM Reader (Y) for damage and foreign substances
   - The Drum (Y) CRUM PWB for contamination or disengagement
   - The Drum (Y) for improper installation
3. If no problems are found, replace the following parts in sequence:
   a. Drum (Y) (PL 8.1) CRUs and Consumables
   b. Drum CRUM Reader (Y) (PL 8.2)
   c. MCU PWB (PL 18.1)

391-918 Drum CRUM M Communication Fail

BSD-ON:BSD 9.3 - Xero Life Control (Y, M)

Communication failure with Drum (M) was detected.

Procedure

1. Turn the power OFF and ON.
2. Check the following:
   - The connection between the MCU PWB P/J411 and the Drum CRUM Reader (M) P/J121 for an open circuit and poor contact.
   - The connection terminals between the Drum (M) CRUM PWB and the Drum CRUM Reader (M) for damage and foreign substances
   - The Drum (M) CRUM PWB for contamination or disengagement
   - The Drum (M) for improper installation
3. If no problems are found, replace the following parts in sequence:
   a. Drum (M) (PL 8.1) CRUs and Consumables
   b. Drum CRUM Reader (M) (PL 8.2)
   c. MCU PWB (PL 18.1)

391-919 Drum CRUM C Communication Fail

BSD-ON: BSD 9.4 - Xero Life Control (C, K)

Communication failure with Drum (C) was detected.

Procedure

1. Turn the power OFF and ON.
2. Check the following:
   - The connection between the MCU PWB P/J411 and the Drum CRUM Reader (C) P/J122 for an open circuit and poor contact.
   - The connection terminals between the Drum (C) CRUM PWB and the Drum CRUM Reader (C) for damage and foreign substances
   - The Drum (C) CRUM PWB for contamination or disengagement
   - The Drum (C) for improper installation
3. If no problems are found, replace the following parts in sequence:
   a. Drum (C) (PL 8.1) CRUs and Consumables
   b. Drum CRUM Reader (C) (PL 8.2)
   c. MCU PWB (PL 18.1)

391-920 Drum Y CRUM Data Broken

BSD-ON:BSD 9.3 - Xero Life Control (Y, M)

Mismatch between write data and read data for Drum Y CRUM.

Procedure

1. Turn the power OFF and ON.
2. Check the following:
   - The connection between the MCU PWB P/J411 and the Drum CRUM Reader (Y) P/J120 for an open circuit and poor contact.
   - The connection terminals between the Drum (Y) CRUM PWB and the Drum CRUM Reader (Y) for damage and foreign substances
   - The Drum (Y) CRUM PWB for contamination or disengagement
   - The Drum (Y) for improper installation
3. If no problems are found, replace the following parts in sequence:
   a. Drum (Y) (PL 8.1) CRUs and Consumables
   b. Drum CRUM Reader (Y) (PL 8.2)
   c. MCU PWB (PL 18.1)

391-921 Drum CRUM K Not In Position

BSD-ON: BSD 9.4 - Xero Life Control (C, K)

The Drum (K) is not in the proper position (loose CRUM).

Procedure

1. Remove and reinstall the Drum (K).
2. Polish the connection terminals between the Drum (K) CRUM PWB and the Drum CRUM Reader (K) with dry cloth. (When cleaning, do not use Drum cleaner, etc.)
3. Check the following:
   - The connection between the MCU PWB P/J411 and the Drum CRUM Reader (K) P/J123 for open circuit, short circuit, and poor contact
   - The connection terminals between the Drum (K) CRUM PWB and the Drum CRUM Reader (K) for damage and foreign substances
   - The Drum (K) for improper installation
4. If no problems are found, replace the following parts in sequence:
   a. Drum (K) (PL 8.1) CRUs and Consumables
   b. Drum CRUM Reader (K) (PL 8.2)
   c. MCU PWB (PL 18.1)

391-922 Drum M CRUM Data Broken

BSD-ON:BSD 9.3 - Xero Life Control (Y, M)

Mismatch between write data and read data for Drum M CRUM.

Procedure

1. Turn the power OFF and ON.
2. Check the following:
   - The connection between the MCU PWB P/J411 and the Drum CRUM Reader (M) P/J121 for open circuit, short circuit, and poor contact
   - The connection terminals between the Drum (M) CRUM PWB and the Drum CRUM Reader (M) for damage and foreign substances
   - The Drum (M) CRUM PWB for contamination or disengagement
   - The Drum (M) for improper installation
3. If no problems are found, replace the following parts in sequence:
   a. Drum (M) (PL 8.1) CRUs and Consumables
   b. Drum CRUM Reader (M) (PL 8.2)
   c. MCU PWB (PL 18.1)

391-923 Drum C CRUM Data Broken

BSD-ON: BSD 9.4 - Xero Life Control (C, K)

Mismatch between write data and read data for Drum C CRUM.

Procedure

1. Turn the power OFF and ON.
2. Check the following:
   - The connection between the MCU PWB P/J411 and the Drum CRUM Reader (C) P/J122 for open circuit, short circuit, and poor contact
   - The connection terminals between the Drum (C) CRUM PWB and the Drum CRUM Reader (C) for damage and foreign substances
   - The Drum (C) CRUM PWB for contamination or disengagement
   - The Drum (C) for improper installation
3. If no problems are found, replace the following parts in sequence:
   a. Drum (C) (PL 8.1) CRUs and Consumables
   b. Drum CRUM Reader (C) (PL 8.2)
   c. MCU PWB (PL 18.1)

391-924 Drum Y CRUM Data Mismatch

BSD-ON:BSD 9.3 - Xero Life Control (Y, M)

Drum Y CRUM recognition area is illegal.

Procedure

1. Turn the power OFF and ON.
2. Check the following:
   - The connection between the MCU PWB P/J411 and the Drum CRUM Reader (Y) P/J120 for open circuit, short circuit, and poor contact
   - The connection terminals between the Drum (Y) CRUM PWB and the Drum CRUM Reader (Y) for damage and foreign substances
   - The Drum (Y) CRUM PWB for contamination or disengagement
   - The Drum (Y) for improper installation
3. If no problems are found, replace the following parts in sequence:
   a. Drum (Y) (PL 8.1) CRUs and Consumables
   b. Drum CRUM Reader (Y) (PL 8.2)
   c. MCU PWB (PL 18.1)

391-925 Drum M CRUM Data Mismatch

BSD-ON:BSD 9.3 - Xero Life Control (Y, M)

Drum M CRUM recognition data is illegal.

Procedure

1. Turn the power OFF and ON.
2. Check the following:
   - The connection between the MCU PWB P/J411 and the Drum CRUM Reader (M) P/J121 for open circuit, short circuit, and poor contact
   - The connection terminals between the Drum (M) CRUM PWB and the Drum CRUM Reader (M) for damage and foreign substances
   - The Drum (M) CRUM PWB for contamination or disengagement
   - The Drum (M) for improper installation
3. If no problems are found, replace the following parts in sequence:
   a. Drum (M) (PL 8.1) CRUs and Consumables
   b. Drum CRUM Reader (M) (PL 8.2)
   c. MCU PWB (PL 18.1)

391-926 Drum C CRUM Data Mismatch

BSD-ON: BSD 9.4 - Xero Life Control (C, K)

Drum C CRUM recognition data is illegal.

Procedure

1. Turn the power OFF and ON.
2. Check the following:
   - The connection between the MCU PWB P/J411 and the Drum CRUM Reader (C) P/J122 for open circuit, short circuit, and poor contact
   - The connection terminals between the Drum (C) CRUM PWB and the Drum CRUM Reader (C) for damage and foreign substances
   - The Drum (C) CRUM PWB for contamination or disengagement
   - The Drum (C) for improper installation
3. If no problems are found, replace the following parts in sequence:
   a. Drum (C) (PL 8.1) CRUs and Consumables
   b. Drum CRUM Reader (C) (PL 8.2)
   c. MCU PWB (PL 18.1)

391-927 Drum CRUM Y Not In Position

BSD-ON:BSD 9.3 - Xero Life Control (Y, M)

The Drum (Y) is not in the proper position (loose CRUM).

Procedure

1. Remove and reinstall the Drum (Y).
2. Polish the connection terminals between the Drum (Y) CRUM PWB and the Drum CRUM Reader (Y) with dry cloth. (When cleaning, do not use Drum cleaner, etc.)
3. Check the following:
   - The connection between the MCU PWB P/J411 and the Drum CRUM Reader (Y) P/J120 for open circuit, short circuit, and poor contact
   - The connection terminals between the Drum (Y) CRUM PWB and the Drum CRUM Reader (Y) for damage and foreign substances
   - The Drum (Y) for improper installation
4. If no problems are found, replace the following parts in sequence:
   a. Drum (Y) (PL 8.1) CRUs and Consumables
   b. Drum CRUM Reader (Y) (PL 8.2)
   c. MCU PWB (PL 18.1)

391-928 Drum CRUM M Not In Position

BSD-ON:BSD 9.3 - Xero Life Control (Y, M)

The Drum (M) is not in the proper position (loose CRUM).

Procedure

1. Remove and reinstall the Drum (M).
2. Polish the connection terminals between the Drum (M) CRUM PWB and the Drum CRUM Reader (M) with dry cloth. (When cleaning, do not use Drum cleaner, etc.)
3. Check the following:
   - The connection between the MCU PWB P/J411 and the Drum CRUM Reader (M) P/J121 for open circuit, short circuit, and poor contact
   - The connection terminals between the Drum (M) CRUM PWB and the Drum CRUM Reader (M) for damage and foreign substances
   - The Drum (M) for improper installation
4. If no problems are found, replace the following parts in sequence:
   a. Drum (M) (PL 8.1) CRUs and Consumables
   b. Drum CRUM Reader (M) (PL 8.2)
   c. MCU PWB (PL 18.1)

391-929 Drum CRUM C Not In Position

BSD-ON: BSD 9.4 - Xero Life Control (C, K)

The Drum (C) is not in the proper position (loose CRUM).

Procedure

1. Remove and reinstall the Drum (C).
2. Polish the connection terminals between the Drum (C) CRUM PWB and the Drum CRUM Reader (C) with dry cloth. (When cleaning, do not use Drum cleaner, etc.)
3. Check the following:
   - The connection between the MCU PWB P/J411 and the Drum CRUM Reader (C) P/J122 for open circuit, short circuit, and poor contact
   - The connection terminals between the Drum (C) CRUM PWB and the Drum CRUM Reader (C) for damage and foreign substances
   - The Drum (C) for improper installation
4. If no problems are found, replace the following parts in sequence:
   a. Drum (C) (PL 8.1) CRUs and Consumables
   b. Drum CRUM Reader (C) (PL 8.2)
   c. MCU PWB (PL 18.1)

391-932 Drum Cartridge (Y) Life End

BSD-ON:BSD 9.3 - Xero Life Control (Y, M)

NOTE: *The chain/link fault code for this RAP is an internal machine code and is never displayed or logged in Fault Code History. Use this RAP to troubleshoot persistent machine status conditions that cannot be cleared by performing the indicated process (e.g., loading paper, closing a cover, replacing a CRU, etc). Entry to this RAP is usually via the Machine Status Faults RAP located in the Other Faults section, or a chain/link listing on a BSD.*

It was detected that the life for Drum (Y) is over.

Procedure

Replace the following in order:

1. Replace the Drum Cartridge (Y) (PL 8.1) (CRUs and Consumables) if it has not already been relaced
2. Reload firmware using GP 9
3. Replace the Drum CRUM Reader (Y) (PL 8.2)
4. Replace the MCU PWB (PL 18.1)

391-933 Drum Cartridge (M) Life End

BSD-ON:BSD 9.3 - Xero Life Control (Y, M)

NOTE: *The chain/link fault code for this RAP is an internal machine code and is never displayed or logged in Fault Code History. Use this RAP to troubleshoot persistent machine status conditions that cannot be cleared by performing the indicated process (e.g., loading paper, closing a cover, replacing a CRU, etc). Entry to this RAP is usually via the Machine Status Faults RAP located in the Other Faults section, or a chain/link listing on a BSD.*

It was detected that the life for Drum (M) is over.

Procedure

Replace the following in order:

1. Replace the Drum Cartridge (M) (PL 8.1) (CRUs and Consumables) if it has not already been relaced
2. Reload firmware using GP 9
3. Replace the Drum CRUM Reader (M) (PL 8.2)
4. Replace the MCU PWB (PL 18.1)

391-934 Drum Cartridge (C) Life End

BSD-ON:BSD 9.3 - Xero Life Control (Y, M)

NOTE: *The chain/link fault code for this RAP is an internal machine code and is never displayed or logged in Fault Code History. Use this RAP to troubleshoot persistent machine status conditions that cannot be cleared by performing the indicated process (e.g., loading paper, closing a cover, replacing a CRU, etc). Entry to this RAP is usually via the Machine Status Faults RAP located in the Other Faults section, or a chain/link listing on a BSD.*

It was detected that the life for Drum (C) is over.

Procedure

Replace the following in order:

1. Replace the Drum Cartridge (C) (PL 8.1) (CRUs and Consumables) if it has not already been relaced
2. Reload firmware using GP 9
3. Replace the Drum CRUM Reader (C) (PL 8.2)
4. Replace the MCU PWB (PL 18.1)

391-936 Drum CRUM Y Data Mismatch

BSD-ON:BSD 9.3 - Xero Life Control (Y, M)

Incorrect authentication area data was detected in Drum (Y).

Procedure

Remove and reinstall the Drum (Y) and check for improper installation. If no problems are found, replace it with the correct Drum (Y) (PL 8.1) CRUs and Consumables.

391-937 Drum CRUM M Data Mismatch

BSD-ON:BSD 9.3 - Xero Life Control (Y, M)

Incorrect authentication area data was detected in Drum (M).

Procedure

Remove and reinstall the Drum (M) and check for improper installation. If no problems are found, replace it with the correct Drum (M) (PL 8.1) CRUs and Consumables.

391-938 Drum CRUM C Data Mismatch

BSD-ON: BSD 9.4 - Xero Life Control (C, K)

Incorrect authentication area data was detected in Drum (C).

Procedure

Remove and reinstall the Drum (C) and check for improper installation. If no problems are found, replace it with the correct Drum (C) (PL 8.1) CRUs and Consumables.

391-939 Drum CRUM K Data Mismatch

BSD-ON: BSD 9.4 - Xero Life Control (C, K)

Incorrect authentication area data was detected in Drum (K).

Procedure

Remove and reinstall the Drum (K) and check for improper installation. If no problems are found, replace it with the correct Drum (K) (PL 8.1) CRUs and Consumables.

392-312 ATC Fail [Y]

BSD-ON:BSD 9.1 - Drum/IBT Drive Control

BSD-ON:BSD 9.2 - Developer Drive Control

BSD-ON:BSD 9.3 - Xero Life Control (Y, M)

BSD-ON:BSD 9.7 - Development (YMC) 2 of 2

BSD-ON:BSD 9.11 - Toner Dispense Control

The frequency at which the ATC Average Fail [Y] or the ATC Amplitude Fail [Y] has been occurring has exceeded the threshold value.

NOTE: •

Although this Fault can be cleared by turning the power OFF and ON and it will be possible to output a few sheets of printouts, when this Fault has occurred a certain number of times, it will no longer be clearable by turning the power OFF and ON. To clear it, clear the value of NVM location [752-365] (ATC Fail [Y]) or NVM location[752-369] (ATC Fail Continuous Count [Y]) to "0". If the machine is not repaired back to normal status, this Fault will occur again during the operation.

- *When turning the power OFF, turn OFF the power switch first and then the main power switch.*

Procedure

Check the following:

- The connection between the MCU PWB P/J411 and the CRUM Reader (Y) P/J120 for open circuit, short circuit, and poor contact
- The connection terminals between the Drum Cartridge (Y) CRUM PWB and the CRUM Reader (Y) for damage and foreign substances
- The Toner Dispense Motor (Y,M) for revolution failure: dC330 [093-001] (PL 5.1)
- The Drum/IBT Drive Motor for revolution failure: dC330 [042-001] (PL 3.2)
- The Developer Drive Motor (Y, M, C) for revolution failure: dC330 [042-004] (PL 3.1)
- The path from Toner Cartridge (Y) to Developer (Y) for toner blockage
- The Developer (Y) for internal toner blockage
- The Toner Cartridge (Y) for internal toner blockage

If no problems are found, replace the following parts in sequence:

- Drum Cartridge (Y) (PL 8.1)
- MCU PWB (PL 18.1)

392-313 ATC Fail [M]

BSD-ON:BSD 9.1 - Drum/IBT Drive Control

BSD-ON:BSD 9.2 - Developer Drive Control

BSD-ON:BSD 9.3 - Xero Life Control (Y, M)

BSD-ON:BSD 9.7 - Development (YMC) 2 of 2

BSD-ON:BSD 9.11 - Toner Dispense Control

The frequency at which the ATC Average Fail [M] or the ATC Amplitude Fail [M] has been occurring has exceeded the threshold value.

NOTE: •

Although this Fault can be cleared by turning the power OFF and ON and it will be possible to output a few sheets of printouts, when this Fault has occurred a certain number of times, it will no longer be clearable by turning the power OFF and ON. To clear it, clear the value of NVM location [752-366] (ATC Fail [M]) or NVM location[752-370] (ATC Fail Continuous Count [M]) to "0". If the machine is not repaired back to normal status, this Fault will occur again during the operation.

- *When turning the power OFF, turn OFF the power switch first and then the main power switch.*

Procedure

Check the following:

- The connection between the MCU PWB P/J411 and the CRUM Reader (M) P/J121 for open circuit, short circuit, and poor contact
- The connection terminals between the Drum Cartridge (M) CRUM PWB and the CRUM Reader (M) for damage and foreign substances
- The Toner Dispense Motor (Y,M) for revolution failure: dC330 [093-002] (PL 5.1)
- The Drum/IBT Drive Motor for revolution failure: dC330 [042-001] (PL 3.2)
- The Developer Drive Motor (Y, M, C) for revolution failure: dC330 [042-004] (PL 3.1)
- The path from Toner Cartridge (M) to Developer (M) for toner blockage
- The Developer (M) for internal toner blockage
- The Toner Cartridge (M) for internal toner blockage

If no problems are found, replace the following parts in sequence:

- Drum Cartridge (M) (PL 8.1)
- MCU PWB (PL 18.1)

392-314 ATC Fail [C]

BSD-ON:BSD 9.1 - Drum/IBT Drive Control

BSD-ON:BSD 9.2 - Developer Drive Control

BSD-ON:BSD 9.4 - Xero Life Control (C, K,)

BSD-ON:BSD 9.7 - Development (YMC) 2 of 2

BSD-ON:BSD 9.11 - Toner Dispense Control

The frequency at which the ATC Average Fail [C] or the ATC Amplitude Fail [C] has been occurring has exceeded the threshold value.

NOTE: •

Although this Fault can be cleared by turning the power OFF and ON and it will be possible to output a few sheets of printouts, when this Fault has occurred a certain number of times, it will no longer be clearable by turning the power OFF and ON. To clear it, clear the value of NVM location [752-367] (ATC Fail [C]) or NVM location[752-371] (ATC Fail Continuous Count [C]) to "0". If the machine is not repaired back to normal status, this Fault will occur again during the operation.

- *When turning the power OFF, turn OFF the power switch first and then the main power switch.*

Procedure

Check the following:

- The connection between the MCU PWB P/J411 and the CRUM Reader (C) P/J122 for open circuit, short circuit, and poor contact
- The connection terminals between the Drum Cartridge (C) CRUM PWB and the CRUM Reader (C) for damage and foreign substances
- The Toner Dispense Motor (C,K) for revolution failure: dC330 [093-003] (PL 5.1)
- The Drum/IBT Drive Motor for revolution failure: dC330 [042-001] (PL 3.2)
- The Developer Drive Motor (Y, M, C) for revolution failure: dC330 [042-004] (PL 3.1)
- The path from Toner Cartridge (C) to Developer (C) for toner blockage
- The Developer (C) for internal toner blockage
- The Toner Cartridge (C) for internal toner blockage

If no problems are found, replace the following parts in sequence:

- Drum Cartridge (C) (PL 8.1)
- MCU PWB (PL 18.1)

392-315 ATC Fail [K]

BSD-ON:BSD 4.1 - Main Drive Control

BSD-ON:BSD 9.1 - Drum/IBT Drive Control

BSD-ON:BSD 9.2 - Developer Drive Control

BSD-ON:BSD 9.4 - Xero Life Control (C, K,)

BSD-ON:BSD 9.8 - Development (K)

BSD-ON:BSD 9.11 - Toner Dispense Control

The frequency at which the ATC Average Fail [K] or the ATC Amplitude Fail [K] has been occurring has exceeded the threshold value.

NOTE: •

Although this Fault can be cleared by turning the power OFF and ON and it will be possible to output a few sheets of printouts, when this Fault has occurred a certain number of times, it will no longer be clearable by turning the power OFF and ON. To clear it, clear the value of NVM location [752-368] (ATC Fail [K]) or NVM location[752-372] (ATC Fail Continuous Count [K]) to "0". If the machine is not repaired back to normal status, this Fault will occur again during the operation.

- *When turning the power OFF, turn OFF the power switch first and then the main power switch.*

Procedure

Check the following:

- The connection between the MCU PWB P/J411 and the CRUM Reader (K) P/J123 for open circuit, short circuit, and poor contact
- The connection terminals between the Drum Cartridge (K) CRUM PWB and the CRUM Reader (K) for damage and foreign substances
- The Toner Dispense Motor (C,K) for revolution failure: dC330 [093-004] (PL 5.1)
- The Drum/IBT Drive Motor for revolution failure: dC330 [042-001] (PL 3.2)
- The Main Drive Motor for revolution failure: dC330 [042-006] (PL 3.3)
- The Developer K Clutch for failure: dC330 [042-010] (PL 3.3)
- The path from Toner Cartridge (K) to Developer (K) for toner blockage
- The Developer (K) for internal toner blockage
- The Toner Cartridge (K) for internal toner blockage

If no problems are found, replace the following parts in sequence:

- Drum Cartridge (K) (PL 8.1)
- MCU PWB (PL 18.1)

392-649 ADC Shutter Open Fail

BSD-ON:BSD 9.12 - ADC & Environment Sensing

The MOB ADC Sensor shutter is open (cannot be closed). (This is a hidden failure. Data is only recorded in history.)

NOTE: *When turning the power OFF, turn OFF the power switch first and then the main power switch.*

Procedure

Check the following:

- The connections between the MOB ADC Sensor In (MOB ADC Assembly) P/J130 and the MCU PWB P/J417 as well as between the MOB ADC Sensor Out (MOB ADC Assembly) P/J132 and the MCU PWB P/J417 for connector disconnection, open circuit, short circuit, and poor contact
- The connection between the MOB ADC Shutter Solenoid P/J228 and the MCU PWB P/J417 for open circuit, short circuit, and poor contact
- MOB ADC Sensor In: dC140 [092-202/203] (PL 18.2)
- MOB ADC Sensor Out: dC140 [092-200/201] (PL 18.2)
- The MOB ADC Shutter Solenoid for failure: dC330 [092-003] (Open), dC330 [092-004] (Close) (PL 18.2)
- The MOB ADC Sensor shutters for opening/closing failure due to foreign substances/burrs, etc.

If no problems are found, replace the following parts in sequence:

- MOB ADC Assembly (PL 18.2)
- MCU PWB (PL 18.1)

392-650 ADC Shutter Close Fail

BSD-ON:BSD 9.12 - ADC & Environment Sensing

The MOB ADC Sensor shutter is closed (cannot be opened). (This is a hidden failure. Data is only recorded in history.)

NOTE: *When turning the power OFF, turn OFF the power switch first and then the main power switch.*

Procedure

Check the following:

- The connections between the MOB ADC Sensor In (MOB ADC Assembly) P/J130 and the MCU PWB P/J417 as well as between the MOB ADC Sensor Out (MOB ADC Assembly) P/J132 and the MCU PWB P/J417 for connector disconnection, open circuit, short circuit, and poor contact
- The connection between the MOB ADC Shutter Solenoid P/J228 and the MCU PWB P/J417 for open circuit, short circuit, and poor contact
- MOB ADC Sensor In: dC140 [092-202/203] (PL 18.2)
- MOB ADC Sensor Out: dC140 [092-200/201] (PL 18.2)
- The MOB ADC Shutter Solenoid for failure: dC330 [092-003] (Open), dC330 [092-004] (Close) (PL 18.2)
- The MOB ADC Sensor shutters for opening/closing failure due to foreign substances/burrs, etc.

If no problems are found, replace the following parts in sequence:

- MOB ADC Assembly (PL 18.2)
- MCU PWB (PL 18.1)

392-651 ADC Sensor Fail

BSD-ON:BSD 9.12 - ADC & Environment Sensing

The MOB ADC Sensor read value of the density reference patch is abnormal. (This is a hidden failure. Data is only recorded in history.)

NOTE: *When turning the power OFF, turn OFF the power switch first and then the main power switch.*

Procedure

Check the connections between the MOB ADC Sensor In (MOB ADC Assembly) P/J130 and the MCU PWB P/J417 as well as between the MOB ADC Sensor Out (MOB ADC Assembly) P/J132 and the MCU PWB P/J417 for connector disconnection, open circuit, short circuit, and poor contact. Also check whether there is foreign substances at the detection section of the MOB ADC Sensor.

If no problems are found, replace the following parts in sequence:

- MOB ADC Assembly (PL 18.2)
- Transfer Belt Unit (PL 6.1)
- MCU PWB (PL 18.1)

392-654 ATC Sensor M Output Fail

BSD-ON:BSD 9.1 - Drum/IBT Drive Control

BSD-ON:BSD 9.2 - Developer Drive Control

BSD-ON:BSD 9.3 - Xero Life Control (Y, M)

BSD-ON:BSD 9.7 - Development (YMC) 2 of 2

BSD-ON:BSD 9.11 - Toner Dispense Control

The fault occurs when ATC sensor M output average value has an error.

Procedure

Check the following:

- The connection between the MCU PWB P/J411 and the CRUM Reader (M) P/J121 for open circuit, short circuit, and poor contact
- The connection terminals between the Drum Cartridge (M) CRUM PWB and the CRUM Reader (M) for damage and foreign substances
- The Toner Dispense Motor (Y,M) for revolution failure: dC330 [093-002] (PL 5.1)
- The Drum/IBT Drive Motor for revolution failure: dC330 [042-001] (PL 3.2)
- The Developer Drive Motor (Y, M, C) for revolution failure: dC330 [042-004] (PL 3.1)
- The path from Toner Cartridge (M) to Developer (M) for toner blockage
- The Developer (M) for internal toner blockage
- The Toner Cartridge (M) for internal toner blockage

If no problems are found, replace the following parts in sequence:

- Drum Cartridge (M) (PL 8.1)
- MCU PWB (PL 18.1)

392-657 ATC Amplitude Fail [Y]

BSD-ON:BSD 9.1 - Drum/IBT Drive Control

BSD-ON:BSD 9.2 - Developer Drive Control

BSD-ON:BSD 9.3 - Xero Life Control (Y, M)

BSD-ON:BSD 9.7 - Development (YMC) 2 of 2

BSD-ON:BSD 9.11 - Toner Dispense Control

The difference between the maximum and minimum values in the ATC Sensor (Y) measurement set is lower than the threshold value. (This is a hidden failure. Data is only recorded in history.)

NOTE: *When turning the power OFF, turn OFF the power switch first and then the main power switch.*

Procedure

Check the following:

- The connection between the MCU PWB P/J411 and the CRUM Reader (Y) P/J120 for open circuit, short circuit, and poor contact
- The connection terminals between the Drum Cartridge Y) CRUM PWB and the CRUM Reader (Y) for damage and foreign substances
- The Toner Dispense Motor (Y,M) for revolution failure: dC330 [093-001] (PL 5.1)
- The Drum/IBT Drive Motor for revolution failure: dC330 [042-001] (PL 3.2)
- The Developer Drive Motor (Y, M, C) for revolution failure: dC330 [042-004] (PL 3.1)
- The path from Toner Cartridge (Y) to Developer (Y) for toner blockage
- The Developer (Y) for internal toner blockage
- The Toner Cartridge (Y) for internal toner blockage

If no problems are found, replace the following parts in sequence:

- Drum Cartridge (Y) (PL 8.1)
- MCU PWB (PL 18.1)

392-658 ATC Amplitude Fail [M]

BSD-ON:BSD 9.1 - Drum/IBT Drive Control

BSD-ON:BSD 9.2 - Developer Drive Control

BSD-ON:BSD 9.3 - Xero Life Control (Y, M)

BSD-ON:BSD 9.7 - Development (YMC) 2 of 2

BSD-ON:BSD 9.11 - Toner Dispense Control

The difference between the maximum and minimum values in the ATC Sensor (M) measurement set is lower than the threshold value. (This is a hidden failure. Data is only recorded in history.)

NOTE: *When turning the power OFF, turn OFF the power switch first and then the main power switch.*

Procedure

Check the following:

- The connection between the MCU PWB P/J411 and the CRUM Reader (M) P/J121 for open circuit, short circuit, and poor contact
- The connection terminals between the Drum Cartridge (M) CRUM PWB and the CRUM Reader (M) for damage and foreign substances
- The Toner Dispense Motor (Y,M) for revolution failure: dC330 [093-002] (PL 5.1)
- The Drum/IBT Drive Motor for revolution failure: dC330 [042-001] (PL 3.2)
- The Developer Drive Motor (Y, M, C) for revolution failure: dC330 [042-004] (PL 3.1)
- The path from Toner Cartridge (M) to Developer (M) for toner blockage
- The Developer (M) for internal toner blockage
- The Toner Cartridge (M) for internal toner blockage

If no problems are found, replace the following parts in sequence:

- Drum Cartridge (M) (PL 8.1)
- MCU PWB (PL 18.1)

392-659 ATC Amplitude Fail [C]

BSD-ON:BSD 9.1 - Drum/IBT Drive Control

BSD-ON:BSD 9.2 - Developer Drive Control

BSD-ON:BSD 9.4 - Xero Life Control (C, K,)

BSD-ON:BSD 9.7 - Development (YMC) 2 of 2

BSD-ON:BSD 9.11 - Toner Dispense Control

The difference between the maximum and minimum values in the ATC Sensor (C) measurement set is lower than the threshold value. (This is a hidden failure. Data is only recorded in history.)

NOTE: *When turning the power OFF, turn OFF the power switch first and then the main power switch.*

Procedure

Check the following:

- The connection between the MCU PWB P/J411 and the CRUM Reader (C) P/J122 for open circuit, short circuit, and poor contact
- The connection terminals between the Drum Cartridge (C) CRUM PWB and the CRUM Reader (C) for damage and foreign substances
- The Toner Dispense Motor (C,K) for revolution failure: dC330 [093-003] (PL 5.1)
- The Drum/IBT Drive Motor for revolution failure: dC330 [042-001] (PL 3.2)
- The Developer Drive Motor (Y, M, C) for revolution failure: dC330 [042-004] (PL 3.1)
- The path from Toner Cartridge (C) to Developer (C) for toner blockage
- The Developer (C) for internal toner blockage
- The Toner Cartridge (C) for internal toner blockage

If no problems are found, replace the following parts in sequence:

- Drum Cartridge (C) (PL 8.1)
- MCU PWB (PL 18.1)

392-660 ATC Amplitude Fail [K]

BSD-ON:BSD 4.1 - Main Drive Control

BSD-ON:BSD 9.1 - Drum/IBT Drive Control

BSD-ON:BSD 9.2 - Developer Drive Control

BSD-ON:BSD 9.4 - Xero Life Control (C, K)

BSD-ON:BSD 9.8 - Development (K)

BSD-ON:BSD 9.11 - Toner Dispense Control

The difference between the maximum and minimum values in the ATC Sensor (K) measurement set is lower than the threshold value. (This is a hidden failure. Data is only recorded in history.)

NOTE: *When turning the power OFF, turn OFF the power switch first and then the main power switch.*

Procedure

Check the following:

- The connection between the MCU PWB P/J411 and the CRUM Reader (K) P/J123 for open circuit, short circuit, and poor contact
- The connection terminals between the Drum Cartridge (K) CRUM PWB and the CRUM Reader (K) for damage and foreign substances
- The Toner Dispense Motor (C,K) for revolution failure: dC330 [093-004] (PL 5.1)
- The Drum/IBT Drive Motor for revolution failure: dC330 [042-001] (PL 3.2)
- The Main Drive Motor for revolution failure: dC330 [042-006] (PL 3.3)
- The Developer K Clutch for failure: dC330 [042-010] (PL 3.3)
- The path from Toner Cartridge (K) to Developer (K) for toner blockage
- The Developer (K) for internal toner blockage
- The Toner Cartridge (K) for internal toner blockage

If no problems are found, replace the following parts in sequence:

- Drum Cartridge (K) (PL 8.1)
- MCU PWB (PL 18.1)

392-661 Temperature Sensor Fail

BSD-ON:BSD 9.12 - ADC & Environment Sensing

Abnormal value was detected by the ENVIRONMENT SENSOR (Temperature). (This is a hidden failure. Data is only recorded in history.)

NOTE: *When turning the power OFF, turn OFF the power switch first and then the main power switch.*

Procedure

Check the connection between the Environment Sensor (MOB ADC Assembly) P/J131 and the MCU PWB P/J417 for open circuit, short circuit, and poor contact. Also check whether there is poor connection or foreign substances at the detection section of the Environment Sensor.

The Environment Sensor (Temperature) for failure: dC330 [092-205] (PL 18.2)

If no problems are found, replace the following parts in sequence:

- MOB ADC Assembly (PL 18.2)
- MCU PWB (PL 18.1)

392-662 Humidity Sensor Fail

BSD-ON:BSD 9.12 - ADC & Environment Sensing

Abnormal value was detected by the ENVIRONMENT SENSOR (Humidity). (This is a hidden failure. Data is only recorded in history.)

NOTE: *When turning the power OFF, turn OFF the power switch first and then the main power switch.*

Procedure

Check the connection between the Environment Sensor (MOB ADC Assembly) P/J131 and the MCU PWB P/J417 for open circuit, short circuit, and poor contact. Also check whether there is poor connection or foreign substances at the detection section of the Environment Sensor.

The Environment Sensor (Humidity) for failure: dC330 [092-204] (PL 18.2)

If no problems are found, replace the following parts in sequence:

- MOB ADC Assembly (PL 18.2)
- MCU PWB (PL 18.1)

392-665 ATC Average Fail [Y]

BSD-ON:BSD 9.1 - Drum/IBT Drive Control

BSD-ON:BSD 9.2 - Developer Drive Control

BSD-ON:BSD 9.3 - Xero Life Control (Y, M)

BSD-ON:BSD 9.7 - Development (YMC) 2 of 2

BSD-ON:BSD 9.11 - Toner Dispense Control

The average measured value of ATC Sensor (Y) is out of the range of appropriate values. (This is a hidden failure. Data is only recorded in history.)

NOTE: *When turning the power OFF, turn OFF the power switch first and then the main power switch.*

Procedure

Check the following:

- The connection between the MCU PWB P/J411 and the CRUM Reader (Y) P/J120 for open circuit, short circuit, and poor contact
- The connection terminals between the Drum Cartridge (Y) CRUM PWB and the CRUM Reader (Y) for damage and foreign substances
- The Toner Dispense Motor (Y,M) for revolution failure: dC330 [093-001] (PL 5.1)
- The Drum/IBT Drive Motor for revolution failure: dC330 [042-001] (PL 3.2)
- The Developer Drive Motor (Y, M, C) for revolution failure: dC330 [042-004] (PL 3.1)
- The path from Toner Cartridge (Y) to Developer (Y) for toner blockage
- The Developer (Y) for internal toner blockage
- The Toner Cartridge (Y) for internal toner blockage

If no problems are found, replace the following parts in sequence:

- Drum Cartridge (Y) (PL 8.1)
- MCU PWB (PL 18.1)

392-666 ATC Average Fail [M]

BSD-ON:BSD 9.1 - Drum/IBT Drive Control

BSD-ON:BSD 9.2 - Developer Drive Control

BSD-ON:BSD 9.3 - Xero Life Control (Y, M)

BSD-ON:BSD 9.7 - Development (YMC) 2 of 2

BSD-ON:BSD 9.11 - Toner Dispense Control

The average measured value of ATC Sensor (M) is out of the range of appropriate values. (This is a hidden failure. Data is only recorded in history.)

NOTE: *When turning the power OFF, turn OFF the power switch first and then the main power switch.*

Procedure

Check the following:

- The connection between the MCU PWB P/J411 and the CRUM Reader (M) P/J121 for open circuit, short circuit, and poor contact
- The connection terminals between the Drum Cartridge (M) CRUM PWB and the CRUM Reader (M) for damage and foreign substances
- The Toner Dispense Motor (Y,M) for revolution failure: dC330 [093-002] (PL 5.1)
- The Drum/IBT Drive Motor for revolution failure: dC330 [042-001] (PL 3.2)
- The Developer Drive Motor (Y, M, C) for revolution failure: dC330 [042-004] (PL 3.1)
- The path from Toner Cartridge (M) to Developer (M) for toner blockage
- The Developer (M) for internal toner blockage
- The Toner Cartridge (M) for internal toner blockage

If no problems are found, replace the following parts in sequence:

- Drum Cartridge (M) (PL 8.1)
- MCU PWB (PL 18.1)

392-667 ATC Average Fail [C]

BSD-ON:BSD 9.1 - Drum/IBT Drive Control

BSD-ON:BSD 9.2 - Developer Drive Control

BSD-ON:BSD 9.4 - Xero Life Control (C, K,)

BSD-ON:BSD 9.7 - Development (YMC) 2 of 2

BSD-ON:BSD 9.11 - Toner Dispense Control

The average measured value of ATC Sensor (C) is out of the range of appropriate values. (This is a hidden failure. Data is only recorded in history.)

NOTE: *When turning the power OFF, turn OFF the power switch first and then the main power switch.*

Procedure

Check the following:

- The connection between the MCU PWB P/J411 and the CRUM Reader (C) P/J122 for open circuit, short circuit, and poor contact
- The connection terminals between the Drum Cartridge (C) CRUM PWB and the CRUM Reader (C) for damage and foreign substances
- The Toner Dispense Motor (C,K) for revolution failure: dC330 [093-003] (PL 5.1)
- The Drum/IBT Drive Motor for revolution failure: dC330 [042-001] (PL 3.2)
- The Developer Drive Motor (Y, M, C) for revolution failure: dC330 [042-004] (PL 3.1)
- The path from Toner Cartridge (C) to Developer (C) for toner blockage
- The Developer (C) for internal toner blockage
- The Toner Cartridge (C) for internal toner blockage

If no problems are found, replace the following parts in sequence:

- Drum Cartridge (C) (PL 8.1)
- MCU PWB (PL 18.1)

392-668 ATC Average Fail [K]

BSD-ON:BSD 4.1 - Main Drive Control

BSD-ON:BSD 9.1 - Drum/IBT Drive Control

BSD-ON:BSD 9.2 - Developer Drive Control

BSD-ON:BSD 9.4 - Xero Life Control (C, K)

BSD-ON:BSD 9.8 - Development (K)

BSD-ON:BSD 9.11 - Toner Dispense Control

The average measured value of ATC Sensor (K) is out of the range of appropriate values. (This is a hidden failure. Data is only recorded in history.)

NOTE: *When turning the power OFF, turn OFF the power switch first and then the main power switch.*

Procedure

Check the following:

- The connection between the MCU PWB P/J411 and the CRUM Reader (K) P/J123 for open circuit, short circuit, and poor contact
- The connection terminals between the Drum Cartridge K) CRUM PWB and the CRUM Reader (K) for damage and foreign substances
- The Toner Dispense Motor (C,K) for revolution failure: dC330 [093-004] (PL 5.1)
- The Drum/IBT Drive Motor for revolution failure: dC330 [042-001] (PL 3.2)
- The Main Drive Motor for revolution failure: dC330 [042-006] (PL 3.3)
- The Developer K Clutch for failure: dC330 [042-010] (PL 3.3)
- The path from Toner Cartridge (K) to Developer (K) for toner blockage
- The Developer (K) for internal toner blockage
- The Toner Cartridge (K) for internal toner blockage

If no problems are found, replace the following parts in sequence:

- Drum Cartridge (K) (PL 8.1)
- MCU PWB (PL 18.1)

392-670 ADC Patch Fail [Y]

BSD-ON:BSD 9.12 - ADC & Environment Sensing

The ADC patch of Y color is abnormally light. (This is a hidden failure. Data is only recorded in history.)

NOTE: *When turning the power OFF, turn OFF the power switch first and then the main power switch.*

Procedure

Enter dC122. Check whether ADC Sensor Fail or ATC Fail [Y] has occurred. **Has Fault 392-651 or 392-312 occurred?**

Y N

Turn the power OFF and check the following:

- The Drum (Y) for contamination
- The 1st BTR (Y) for contamination
- The Transfer Belt for contamination
- The connection and board springs between the HVPS and the 1st BTR (Y) for open circuits, short circuits, and poor contacts
- The connection and board springs between the HVPS and the Magnet Roll (Y) for open circuits, short circuits, and poor contacts

If no problems are found, replace the following parts in sequence:

- Drum Cartridge Y) (PL 8.1)
- HVPS (PL 18.1)
- MCU PWB (PL 18.1)

Go to the appropriate RAP

392-671 ADC Patch Fail [M]

BSD-ON:BSD 9.12 - ADC & Environment Sensing

The ADC patch of M color is abnormally light. (This is a hidden failure. Data is only recorded in history.)

NOTE: *When turning the power OFF, turn OFF the power switch first and then the main power switch.*

Procedure

Enter dC122. Check whether ADC Sensor Fail or ATC Fail [M] has occurred. **Has Fault 392-651 or 392-313 occurred?**

Y N

Turn the power OFF and check the following:

- The Drum (M) for contamination
- The 1st BTR (M) for contamination
- The Transfer Belt for contamination
- The connection and board springs between the HVPS and the 1st BTR (M) for open circuits, short circuits, and poor contacts
- The connection and board springs between the HVPS and the Magnet Roll (M) for open circuits, short circuits, and poor contacts

If no problems are found, replace the following parts in sequence:

- Drum Cartridge (M) (PL 8.1)
- HVPS (PL 18.1)
- MCU PWB (PL 18.1)

Go to the appropriate RAP

392-672 ADC Patch Fail [C]

BSD-ON:BSD 9.12 - ADC & Environment Sensing

The ADC patch of C color is abnormally light. (This is a hidden failure. Data is only recorded in history.)

NOTE: *When turning the power OFF, turn OFF the power switch first and then the main power switch.*

Procedure

Enter dC122. Check whether ADC Sensor Fail or ATC Fail [C] has occurred. **Has Fault 392-651 or 392-314 occurred?**

Y N

Turn the power OFF and check the following:

- The Drum (C) for contamination
- The 1st BTR (C) for contamination
- The Transfer Belt for contamination
- The connection and board springs between the HVPS and the 1st BTR (C) for open circuits, short circuits, and poor contacts
- The connection and board springs between the HVPS and the Magnet Roll (C) for open circuits, short circuits, and poor contacts

If no problems are found, replace the following parts in sequence:

- Drum Cartridge (C) (PL 8.1)
- HVPS (PL 18.1)
- MCU PWB (PL 18.1)

Go to the appropriate RAP

392-673 ADC Patch Fail [K]

BSD-ON:BSD 9.12 - ADC & Environment Sensing

The ADC patch of K color is abnormally light. (This is a hidden failure. Data is only recorded in history.)

NOTE: *When turning the power OFF, turn OFF the power switch first and then the main power switch.*

Procedure

Enter dC122. Check whether ADC Sensor Fail or ATC Fail [K] has occurred. **Has Fault 392-651 or 392-315 occurred?**

Y N

Turn the power OFF and check the following:

- The Drum (K) for contamination
- The 1st BTR (K) for contamination
- The Transfer Belt for contamination
- The connection and board springs between the HVPS and the 1st BTR (K) for open circuits, short circuits, and poor contacts
- The connection and board springs between the HVPS and the Magnet Roll (K) for open circuits, short circuits, and poor contacts

If no problems are found, replace the following parts in sequence:

- Drum Cartridge (K) (PL 8.1)
- HVPS (PL 18.1)
- MCU PWB (PL 18.1)

Go to the appropriate RAP

393-314 Dispense Motor (Y) Fail

BSD-ON:BSD 9.9 - Toner Cartridge Life Control (Y, M)

BSD-ON:BSD 9.11 - Toner Dispense Control

Regardless of low usage of toner from Y Toner Cartridge, it was detected to be empty.

NOTE:

- *When the Toner Cartridge torque becomes heavier due to unexpected storage condition, etc., the Toner Dispense Motor might step out, emit abnormal noise, and cease to rotate. In this case, shake the Toner Cartridge and then reinstall it.*
- *When turning the power OFF, turn OFF the power switch first and then the main power switch.*

Procedure

1. Turn the power OFF and ON.
2. Replace the Toner Cartridge (Y) (PL 5.1).

   If the problem persists, check the following:
   - The connectors of the MCU PWB P/J413 and the Toner CRUM Coupler Assembly (Y) P/J124 for damage, foreign substances, bent connector pins, burns, and improper soldering on the PWB
   - The connection between the MCU PWB P/J413 and the Toner CRUM Coupler Assembly (Y) P/J124 for open circuit, short circuit, and poor contact
   - Toner Dispense Motor (Y,M): dC330 [093-001] (PL 5.1)
   - The drive transmission path in the Dispense Assembly
   - MCU PWB (PL 18.1) failure.

393-315 Dispense Motor (M) Fail

BSD-ON:BSD 9.9 - Toner Cartridge Life Control (Y, M)

BSD-ON:BSD 9.11 - Toner Dispense Control

Regardless of low usage of toner from M Toner Cartridge, it was detected to be empty.

NOTE:

- *When the Toner Cartridge torque becomes heavier due to unexpected storage condition, etc., the Toner Dispense Motor might step out, emit abnormal noise, and cease to rotate. In this case, shake the Toner Cartridge and then reinstall it.*
- *When turning the power OFF, turn OFF the power switch first and then the main power switch.*

Procedure

1. Turn the power OFF and ON.
2. Replace the Toner Cartridge (M) (PL 5.1).

   If the problem persists, check the following:
   - The connectors of the MCU PWB P/J413 and the Toner CRUM Coupler Assembly (M) P/J125 for damage, foreign substances, bent connector pins, burns, and improper soldering on the PWB
   - The connection between the MCU PWB P/J413 and the Toner CRUM Coupler Assembly (M) P/J125 for open circuit, short circuit, and poor contact
   - Toner Dispense Motor (Y,M): dC330 [093-002] (PL 5.1)
   - The drive transmission path in the Dispense Assembly
   - MCU PWB (PL 18.1) failure.

393-316 Dispense Motor (C) Fail

BSD-ON:BSD 9.10 - Toner Cartridge Life ControL (C, K)

BSD-ON:BSD 9.11 - Toner Dispense Control

Regardless of low usage of toner from C Toner Cartridge, it was detected to be empty.

NOTE:

- *When the Toner Cartridge torque becomes heavier due to unexpected storage condition, etc., the Toner Dispense Motor might step out, emit abnormal noise, and cease to rotate. In this case, shake the Toner Cartridge and then reinstall it.*
- *When turning the power OFF, turn OFF the power switch first and then the main power switch.*

Procedure

1. Turn the power OFF and ON.
2. Replace the Toner Cartridge (C) (PL 5.1).

   If the problem persists, check the following:

   - The connectors of the MCU PWB P/J413 and the Toner CRUM Coupler Assembly (C) P/J126 for damage, foreign substances, bent connector pins, burns, and improper soldering on the PWB
   - The connection between the MCU PWB P/J413 and the Toner CRUM Coupler Assembly (C) P/J126 for open circuit, short circuit, and poor contact
   - Toner Dispense Motor (C,K): dC330 [093-003] (PL 5.1)
   - The drive transmission path in the Dispense Assembly
   - MCU PWB (PL 18.1) failure.

393-317 Dispense Motor (K) Fail

BSD-ON:BSD 9.10 - Toner Cartridge Life ControL (C, K)

BSD-ON:BSD 9.11 - Toner Dispense Control

Regardless of low usage of toner from K Toner Cartridge, it was detected to be empty.

NOTE:

- *When the Toner Cartridge torque becomes heavier due to unexpected storage condition, etc., the Toner Dispense Motor might step out, emit abnormal noise, and cease to rotate. In this case, shake the Toner Cartridge and then reinstall it.*
- *When turning the power OFF, turn OFF the power switch first and then the main power switch.*

Procedure

1. Turn the power OFF and ON.
2. Replace the Toner Cartridge (K) (PL 5.1).

   If the problem persists, check the following:

   - The connectors of the MCU PWB P/J413 and the Toner CRUM Coupler Assembly (K) P/J127 for damage, foreign substances, bent connector pins, burns, and improper soldering on the PWB
   - The connection between the MCU PWB P/J413 and the Toner CRUM Coupler Assembly (K) P/J127 for open circuit, short circuit, and poor contact
   - Toner Dispense Motor (C,K): dC330 [093-004] (PL 5.1)
   - The drive transmission path in the Dispense Assembly
   - MCU PWB (PL 18.1) failure.

393-320 Developer Motor Fail (Y, M, C)

BSD-ON:BSD 9.2 - Developer Drive Control

The Developer Motor (Y, M, C) revolution failure was detected.

NOTE: *When turning the power OFF, turn OFF the power switch first and then the main power switch.*

Procedure

Turn the power OFF and remove the Front Cover. Remove the Drum Cartridge (Y, M, C) and cheat the Front Cover Interlock Switch. Turn the power ON and enter the Diag mode. Turn ON dC330 [042-004] (Developer Drive Motor (Y, M, C). **Can the operation noise of the Developer Drive Motor (Y, M, C) be heard?**

Y N

Turn the power OFF and remove the Rear Lower Cover. Turn the power ON. Go to +24VDC -1 Wirenet. **The voltage between the MCU PWB P/J414-1 (+) and the GND (-) +24VDC.**

Y N

Go to +24VDC Power.

Go to +5VDC-3 Wirenet. **The voltage between the MCU PWB P/J413-B16 (+) and the GND (-) +5VDC.**

Y N

Go to +5VDC Power

Turn the power OFF and check the connections between the MCU PWB P/J414 and the Developer Drive Motor (Y, M, C) P/J214, as well as between the MCU PWB P/J413 and the Developer Drive Motor (Y, M, C) P/J215 for open circuits, short circuits, and poor contacts.

If no problems are found, replace the following parts in sequence:

- Developer Drive Motor (Y, M, C) (PL 3.1)
- MCU PWB (PL 18.1)

Press the **Stop** button and turn the power OFF. Install the Drum Cartridge (Y, M, C) and the Front Cover. Turn the power ON and enter the Diag mode. Turn ON dC330 [042-004] (Developer Drive Motor (Y, M, C). **The operation noise of the Developer Drive Motor (Y, M, C) is heard.**

Y N

Check the Developer (Y, M, C) for loading.

Press the **Stop** button and turn the power OFF. Check the connection between the Developer Drive Motor (Y, M, C) P/J215-8 and the MCU PWB P/J413-B9 for open circuit, short circuit, and poor contact. If no problems are found, replace the MCU PWB (PL 18.1).

393-400 Toner Cartridge (Y) Near Empty

BSD-ON:BSD 9.9 - Toner Cartridge Life Control (Y, M)

NOTE: *The chain/link fault code for this RAP is an internal machine code and is never displayed or logged in Fault Code History. Use this RAP to troubleshoot persistent machine status conditions that cannot be cleared by performing the indicated process (e.g., loading paper, closing a cover, replacing a CRU, etc). Entry to this RAP is usually via the Machine Status Faults RAP located in the Other Faults section, or a chain/link listing on a BSD.*

It was detected that the replacement timing for Toner Cartridge (Y) is closer than Pre Near.

Initial Actions

The Toner Cartridge (Y) needs to be replaced soon. Replace the Toner Cartridge (Y) (PL 5.1) as required.

Procedure

If replacing the Toner Cartridge (Y) fails to resolve the problem, troubleshoot the components and circuits using BSD 9.9 - Toner Cartridge Life Control (Y, M).

393-423 Toner Cartridge (M) Near Empty

BSD-ON:BSD 9.9 - Toner Cartridge Life Control (Y, M)

NOTE: *The chain/link fault code for this RAP is an internal machine code and is never displayed or logged in Fault Code History. Use this RAP to troubleshoot persistent machine status conditions that cannot be cleared by performing the indicated process (e.g., loading paper, closing a cover, replacing a CRU, etc). Entry to this RAP is usually via the Machine Status Faults RAP located in the Other Faults section, or a chain/link listing on a BSD.*

It was detected that the replacement timing for Toner Cartridge (Y) is closer than Pre Near.

Initial Actions

The Toner Cartridge (M) needs to be replaced soon. Replace the Toner Cartridge (M) (PL 5.1) as required.

Procedure

If replacing the Toner Cartridge (M) fails to resolve the problem, troubleshoot the components and circuits using BSD 9.9 - Toner Cartridge Life Control (Y, M).

393-424 Toner Cartridge (C) Near Empty

BSD-ON:BSD 9.10 - Toner Cartridge Life ControL (C, K)

NOTE: *The chain/link fault code for this RAP is an internal machine code and is never displayed or logged in Fault Code History. Use this RAP to troubleshoot persistent machine status conditions that cannot be cleared by performing the indicated process (e.g., loading paper, closing a cover, replacing a CRU, etc). Entry to this RAP is usually via the Machine Status Faults RAP located in the Other Faults section, or a chain/link listing on a BSD.*

It was detected that the replacement timing for Toner Cartridge (C) is closer than Pre Near.

Initial Actions

The Toner Cartridge (C) needs to be replaced soon. Replace the Toner Cartridge (M) (PL 5.1) as required.

Procedure

If replacing the Toner Cartridge (C) fails to resolve the problem, troubleshoot the components and circuits using BSD 9.10 - Toner Cartridge Life ControL (C, K).

393-425 Toner Cartridge (K) Near Empty

BSD-ON:BSD 9.10 - Toner Cartridge Life ControL (C, K)

NOTE: *The chain/link fault code for this RAP is an internal machine code and is never displayed or logged in Fault Code History. Use this RAP to troubleshoot persistent machine status conditions that cannot be cleared by performing the indicated process (e.g., loading paper, closing a cover, replacing a CRU, etc). Entry to this RAP is usually via the Machine Status Faults RAP located in the Other Faults section, or a chain/link listing on a BSD.*

It was detected that the replacement timing for Toner Cartridge (K) is closer than Pre Near.

Initial Actions

The Toner Cartridge (K) needs to be replaced soon. Replace the Toner Cartridge (M) (PL 5.1) as required.

Procedure

If replacing the Toner Cartridge (K) fails to resolve the problem, troubleshoot the components and circuits using BSD 9.10 - Toner Cartridge Life ControL (C, K).

393-912 Toner Cartridge (K) Empty

BSD-ON:BSD 9.10 - Toner Cartridge Life ControL (C, K)

NOTE: *The chain/link fault code for this RAP is an internal machine code and is never displayed or logged in Fault Code History. Use this RAP to troubleshoot persistent machine status conditions that cannot be cleared by performing the indicated process (e.g., loading paper, closing a cover, replacing a CRU, etc). Entry to this RAP is usually via the Machine Status Faults RAP located in the Other Faults section, or a chain/link listing on a BSD.*

The K Toner Cartridge Empty state was detected.

Initial Actions

Replace the Toner Cartridge (K) (PL 5.1).

Procedure

If replacing the Toner Cartridge (K) fails to resolve the problem, troubleshoot the components and circuits using BSD 9.10 - Toner Cartridge Life ControL (C, K).

393-924 Toner CRUM (K) Communication Fail

BSD-ON:BSD 9.10 - Toner Cartridge Life ControL (C, K)

Communication failure with Toner CRUM (K) was detected.

NOTE: *When turning the power OFF, turn OFF the power switch first and then the main power switch.*

NOTE: *The WC 7220/7225 is shipped with "Worldwide Neutral" Toner Cartridges. When the cartridges shipped with the machine are installed, the machine is set to Worldwide Neutral configuration.When the first toner cartridge (any color) is replaced in the WC 7220/7225, the Geographic Differentiation Code and Toner Cartridge Type in NVM are automatically changed to the same settings as the replacement cartridge. Once these NVM are set, the WC 7220/7225 toner configuration can only be changed with a CRUM conversion.*

One or more Toner Cartridges are of the wrong type (i.e., a "Sold" cartridge installed in a "metered" configured machine.

Procedure

1. Turn the power OFF and ON.
2. Check the connection between the MCU PWB P/J413 and the Toner CRUM Coupler Assembly (K) P/J127 for open circuit, short circuit, and poor contact. Also, remove and reinstall the Toner Cartridge (K) and check for improper installation.

   If no problems are found, replace the following parts in sequence:
   - Toner Cartridge (K) (PL 5.1)
   - Toner CRUM Coupler Assembly (K) (PL 5.1)
   - MCU PWB (PL 18.1)
   - Go to the 393-926 Toner K CRUM Data Mismatch Fail RAP.

393-925 Toner CRUM (K) Data Broken Fail

BSD-ON:BSD 9.10 - Toner Cartridge Life ControL (C, K)

The system detected that the data written to the Toner CRUM (K) and the data read from the Toner CRUM (K) do not match.

NOTE: *The WC 7220/7225 is shipped with "Worldwide Neutral" Toner Cartridges. When the cartridges shipped with the machine are installed, the machine is set to Worldwide Neutral configuration.When the first toner cartridge (any color) is replaced in the WC 7220/7225, the Geographic Differentiation Code and Toner Cartridge Type in NVM are automatically changed to the same settings as the replacement cartridge. Once these NVM are set, the WC 7220/7225 toner configuration can only be changed with a CRUM conversion.*

One or more Toner Cartridges are of the wrong type (i.e., a "Sold" cartridge installed in a "metered" configured machine.

Initial Actions

Remove and reinstall the Toner Cartridge (K).

Procedure

An Error Message appears on the UI - **Reinsert an improperly seated consumable or replace any consumables with Error. Press Machine Status button and select Supplies tab for details.** Remove and reinstall the Black Toner Cartridge and check for improper installation. **The problem continues**

Y **N**

End

Check the NVM locations in Table 1.

Table 1 CRUM Data NVM

NVM Location	Name	Values (read-only)
740-053	Geographic Setting	3 = North America/Europe 12 = DMO 15 = Worldwide
740-055	Contract Type	2 = Sold 3 = Metered 31 = Neutral

The NVM values match the expected customer configuration.

Y **N**

Determine correct Contract Type from customer. Contact Technical Support Center or your NTS for the CRUM conversion procedure.

1. Polish the connection terminals between the Toner Cartridge (K) CRUM PWB and the Toner CRUM Coupler Assembly (K) CRUM with dry cloth. (When cleaning, do not use Drum cleaner, etc.)
2. Check the following:
   - The connection between the MCU PWB P/J413 and the Toner CRUM Coupler Assembly (K) P/J127 for open circuit, short circuit, and poor contact

- The connection terminals between the Toner Cartridge (K) CRUM PWB and the Toner CRUM Coupler Assembly (K) CRUM for damage and foreign substances
- The Toner Cartridge (K) for improper installation

If no problems are found, replace the following parts in sequence:

- Toner Cartridge (K) (PL 5.1)
- Toner CRUM Coupler Assembly (K) (PL 5.1)
- MCU PWB (PL 18.1)

393-926 Toner CRUM (K) Data Mismatch Fail

BSD-ON: BSD 9.10 - Toner Cartridge Life ControL (C, K)

Incorrect authentication area data was detected in the Black Toner CRUM. This fault is displayed if the wrong type of Toner cartridge is installed.

NOTE: *The WC 7220/7225 is shipped with "Worldwide Neutral" Toner Cartridges. When the cartridges shipped with the machine are installed, the machine is set to Worldwide Neutral configuration.When the first toner cartridge (any color) is replaced in the WC 7220/7225, the Geographic Differentiation Code and Toner Cartridge Type in NVM are automatically changed to the same settings as the replacement cartridge. Once these NVM are set, the WC 7220/7225 toner configuration can only be changed with a CRUM conversion.*

One or more Toner Cartridges are of the wrong type (i.e., a "Sold" cartridge installed in a "metered" configured machine.

Initial Actions

Remove and reinstall the Toner Cartridge (K).

Procedure

An Error Message appears on the UI - **Reinsert an improperly seated consumable or replace any consumables with Error. Press Machine Status button and select Supplies tab for details.** Remove and reinstall the Black Toner Cartridge and check for improper installation. **The problem continues**

Y **N**

End

Check the NVM locations in Table 1.

Table 1 CRUM Data NVM

NVM Location	Name	Values (read-only)
740-053	Geographic Setting	3 = North America/Europe 12 = DMO 15 = Worldwide
740-055	Contract Type	2 = Sold 3 = Metered 31 = Neutral

The NVM values match the expected customer configuration.

Y **N**

Determine correct Contract Type from customer. Contact Technical Support Center or your NTS for the CRUM conversion procedure.

1. Polish the connection terminals between the Toner Cartridge (K) CRUM PWB and the Toner CRUM Coupler Assembly (K) CRUM with dry cloth. (When cleaning, do not use Drum cleaner, etc.)
2. Check the following:
   - The connection between the MCU PWB P/J413 and the Toner CRUM Coupler Assembly (K) P/J127 for open circuit, short circuit, and poor contact

- The connection terminals between the Toner Cartridge (K) CRUM PWB and the Toner CRUM Coupler Assembly (K) CRUM for damage and foreign substances
- The Toner Cartridge (K) for improper installation

If no problems are found, replace the following parts in sequence:

- Toner Cartridge (K) (PL 5.1)
- Toner CRUM Coupler Assembly (K) (PL 5.1)
- MCU PWB (PL 18.1)

393-927 Toner CRUM (Y) Communication Fault

BSD-ON:BSD 9.9 - Toner Cartridge Life Control (Y, M)

Communication failure between Toner Cartridge Y and CRUM.

NOTE: *When turning the power OFF, turn OFF the power switch first and then the main power switch.*

NOTE: *The WC 7220/7225 is shipped with "Worldwide Neutral" Toner Cartridges. When the cartridges shipped with the machine are installed, the machine is set to Worldwide Neutral configuration.When the first toner cartridge (any color) is replaced in the WC 7220/7225, the Geographic Differentiation Code and Toner Cartridge Type in NVM are automatically changed to the same settings as the replacement cartridge. Once these NVM are set, the WC 7220/7225 toner configuration can only be changed with a CRUM conversion.*

One or more Toner Cartridges are of the wrong type (i.e., a "Sold" cartridge installed in a "metered" configured machine.

Procedure

1. Turn the power OFF and ON.
2. Check the connection between the MCU PWB P/J413 and the Toner CRUM Coupler Assembly (Y) P/J124 for open circuit, short circuit, and poor contact. Also, remove and reinstall the Toner Cartridge (Y) and check for improper installation.

   If no problems are found, replace the following parts in sequence:

   - Toner Cartridge (Y) (PL 5.1)
   - Toner CRUM Coupler Assembly (Y) (PL 5.1)
   - MCU PWB (PL 18.1)
   - Go to the 393-937 Toner Y CRUM Data Mismatch Fail RAP.

393-928 Toner CRUM (M) Communication Fault

BSD-ON:BSD 9.9 - Toner Cartridge Life Control (Y, M)

Communication failure between Toner Cartridge M and CRUM.

NOTE: *When turning the power OFF, turn OFF the power switch first and then the main power switch.*

NOTE: *The WC 7220/7225 is shipped with "Worldwide Neutral" Toner Cartridges. When the cartridges shipped with the machine are installed, the machine is set to Worldwide Neutral configuration.When the first toner cartridge (any color) is replaced in the WC 7220/7225, the Geographic Differentiation Code and Toner Cartridge Type in NVM are automatically changed to the same settings as the replacement cartridge. Once these NVM are set, the WC 7220/7225 toner configuration can only be changed with a CRUM conversion.*

One or more Toner Cartridges are of the wrong type (i.e., a "Sold" cartridge installed in a "metered" configured machine.

Procedure

1. Turn the power OFF and ON.
2. Check the connection between the MCU PWB P/J413 and the Toner CRUM Coupler Assembly (M) P/J125 for open circuit, short circuit, and poor contact. Also, remove and reinstall the Toner Cartridge (M) and check for improper installation.

   If no problems are found, replace the following parts in sequence:

   - Toner Cartridge (M) (PL 5.1)
   - Toner CRUM Coupler Assembly (M) (PL 5.1)
   - MCU PWB (PL 18.1)
   - Go to the 393-938 Toner M CRUM Data Mismatch Fail RAP.

393-929 Toner CRUM (C) Communication Fault

BSD-ON:BSD 9.10 - Toner Cartridge Life ControL (C, K)

Communication failure between Toner Cartridge Y and CRUM.

NOTE: *When turning the power OFF, turn OFF the power switch first and then the main power switch.*

NOTE: *The WC 7220/7225 is shipped with "Worldwide Neutral" Toner Cartridges. When the cartridges shipped with the machine are installed, the machine is set to Worldwide Neutral configuration.When the first toner cartridge (any color) is replaced in the WC 7220/7225, the Geographic Differentiation Code and Toner Cartridge Type in NVM are automatically changed to the same settings as the replacement cartridge. Once these NVM are set, the WC 7220/7225 toner configuration can only be changed with a CRUM conversion.*

One or more Toner Cartridges are of the wrong type (i.e., a "Sold" cartridge installed in a "metered" configured machine.

Procedure

1. Turn the power OFF and ON.
2. Check the connection between the MCU PWB P/J413 and the Toner CRUM Coupler Assembly (C) P/J126 for open circuit, short circuit, and poor contact. Also, remove and reinstall the Toner Cartridge (C) and check for improper installation.

   If no problems are found, replace the following parts in sequence:

   - Toner Cartridge (C) (PL 5.1)
   - Toner CRUM Coupler Assembly (C) (PL 5.1)
   - MCU PWB (PL 18.1)
   - Go to the 393-939 Toner C CRUM Data Mismatch Fail RAP.

393-933 Toner CRUM (Y) Data Broken Fault

BSD-ON:BSD 9.9 - Toner Cartridge Life Control (Y, M)

The system detected that the data written to the Toner CRUM (Y) and the data read from the Toner CRUM (Y) do not match.

NOTE: *The WC 7220/7225 is shipped with "Worldwide Neutral" Toner Cartridges. When the cartridges shipped with the machine are installed, the machine is set to Worldwide Neutral configuration.When the first toner cartridge (any color) is replaced in the WC 7220/7225, the Geographic Differentiation Code and Toner Cartridge Type in NVM are automatically changed to the same settings as the replacement cartridge. Once these NVM are set, the WC 7220/7225 toner configuration can only be changed with a CRUM conversion.*

One or more Toner Cartridges are of the wrong type (i.e., a "Sold" cartridge installed in a "metered" configured machine.

Procedure

- Remove and reinstall the Toner Cartridge (Y) and check for improper installation. If no problems are found, replace the Toner Cartridge (Y) (PL 5.1).
- Go to the 393-937 Toner Y CRUM Data Mismatch Fail RAP.

393-934 Toner CRUM (M) Data Broken Fault

BSD-ON:BSD 9.9 - Toner Cartridge Life Control (Y, M)

The system detected that the data written to the Toner CRUM (M) and the data read from the Toner CRUM (M) do not match.

NOTE: *The WC 7220/7225 is shipped with "Worldwide Neutral" Toner Cartridges. When the cartridges shipped with the machine are installed, the machine is set to Worldwide Neutral configuration.When the first toner cartridge (any color) is replaced in the WC 7220/7225, the Geographic Differentiation Code and Toner Cartridge Type in NVM are automatically changed to the same settings as the replacement cartridge. Once these NVM are set, the WC 7220/7225 toner configuration can only be changed with a CRUM conversion.*

One or more Toner Cartridges are of the wrong type (i.e., a "Sold" cartridge installed in a "metered" configured machine.

Procedure

- Remove and reinstall the Toner Cartridge (M) and check for improper installation. If no problems are found, replace the Toner Cartridge (M) (PL 5.1).
- Go to the 393-938 Toner M CRUM Data Mismatch Fail RAP.

393-935 Toner CRUM (C) Data Broken Fault

BSD-ON:BSD 9.10 - Toner Cartridge Life ControL (C, K)

The system detected that the data written to the Toner CRUM (C) and the data read from the Toner CRUM (C) do not match.

NOTE: *The WC 7220/7225 is shipped with "Worldwide Neutral" Toner Cartridges. When the cartridges shipped with the machine are installed, the machine is set to Worldwide Neutral configuration.When the first toner cartridge (any color) is replaced in the WC 7220/7225, the Geographic Differentiation Code and Toner Cartridge Type in NVM are automatically changed to the same settings as the replacement cartridge. Once these NVM are set, the WC 7220/7225 toner configuration can only be changed with a CRUM conversion.*

One or more Toner Cartridges are of the wrong type (i.e., a "Sold" cartridge installed in a "metered" configured machine.

Procedure

- Remove and reinstall the Toner Cartridge (C) and check for improper installation. If no problems are found, replace the Toner Cartridge (C) (PL 5.1).
- Go to the 393-939 Toner C CRUM Data Mismatch Fail RAP.

393-937 Toner CRUM (Y) Data Mismatch Fault

BSD-ON: BSD 9.9 - Toner Cartridge Life Control (Y, M)

Incorrect authentication area data was detected in the Yellow Toner CRUM. This fault is displayed if the wrong type of Toner cartridge is installed.

NOTE: *The WC 7220/7225 is shipped with "Worldwide Neutral" Toner Cartridges. When the cartridges shipped with the machine are installed, the machine is set to Worldwide Neutral configuration.When the first toner cartridge (any color) is replaced in the WC 7220/7225, the Geographic Differentiation Code and Toner Cartridge Type in NVM are automatically changed to the same settings as the replacement cartridge. Once these NVM are set, the WC 7220/7225 toner configuration can only be changed with a CRUM conversion.*

One or more Toner Cartridges are of the wrong type (i.e., a "Sold" cartridge installed in a "metered" configured machine.

Initial Actions

Remove and reinstall the Toner Cartridge (Y).

Procedure

An Error Message appears on the UI - **Reinsert an improperly seated consumable or replace any consumables with Error. Press Machine Status button and select Supplies tab for details.** Remove and reinstall the Yellow Toner Cartridge and check for improper installation. **The problem continues**

Y **N**
End

Check the NVM locations in Table 1.

Table 1 NVM Values

NVM Location	Name	Values (read-only)
740-053	Geographic Setting	3 = North America/Europe 12 = DMO 15 = Worldwide
740-055	Contract Type	2 = Sold 3 = Metered 31 = Neutral

The NVM values match the expected customer configuration.

Y **N**
Determine correct Contract Type from customer. Contact Technical Support Center or your NTS for the CRUM conversion procedure.

1. Polish the connection terminals between the Toner Cartridge (Y) CRUM PWB and the Toner CRUM Coupler Assembly (Y) CRUM with dry cloth. (When cleaning, do not use Drum cleaner, etc.)
2. Check the following:
   - The connection between the MCU PWB P/J413 and the Toner CRUM Coupler Assembly (Y) P/J124 for open circuit, short circuit, and poor contact

- The connection terminals between the Toner Cartridge (Y) CRUM PWB and the Toner CRUM Coupler Assembly (Y) CRUM for damage and foreign substances
- The Toner Cartridge (Y) for improper installation

If no problems are found, replace the following parts in sequence:

- Toner Cartridge (Y) (PL 5.1)
- Toner CRUM Coupler Assembly (Y) (PL 5.1)
- MCU PWB (PL 18.1)

393-938 Toner CRUM (M) Data Mismatch Fault

BSD-ON:BSD 9.9 - Toner Cartridge Life Control (Y, M)

Incorrect authentication area data was detected in the Magenta Toner CRUM. This fault is displayed if the wrong type of Toner cartridge is installed.

NOTE: *The WC 7220/7225 is shipped with "Worldwide Neutral" Toner Cartridges. When the cartridges shipped with the machine are installed, the machine is set to Worldwide Neutral configuration.When the first toner cartridge (any color) is replaced in the WC 7220/7225, the Geographic Differentiation Code and Toner Cartridge Type in NVM are automatically changed to the same settings as the replacement cartridge. Once these NVM are set, the WC 7220/7225 toner configuration can only be changed with a CRUM conversion.*

One or more Toner Cartridges are of the wrong type (i.e., a "Sold" cartridge installed in a "metered" configured machine.

Initial Actions

Remove and reinstall the Toner Cartridge (M).

Procedure

An Error Message appears on the UI - **Reinsert an improperly seated consumable or replace any consumables with Error. Press Machine Status button and select Supplies tab for details.** Remove and reinstall the Magenta Toner Cartridge and check for improper installation. **The problem continues**

Y **N**
End

Check the NVM locations in Table 1.

Table 1 NVM Values

NVM Location	Name	Values (read-only)
740-053	Geographic Setting	3 = North America/Europe 12 = DMO 15 = Worldwide
740-055	Contract Type	2 = Sold 3 = Metered 31 = Neutral

The NVM values match the expected customer configuration.

Y **N**
Determine correct Contract Type from customer. Contact Technical Support Center or your NTS for the CRUM conversion procedure.

1. Polish the connection terminals between the Toner Cartridge (M) CRUM PWB and the Toner CRUM Coupler Assembly (M) CRUM with dry cloth. (When cleaning, do not use Drum cleaner, etc.)
2. Check the following:
   - The connection between the MCU PWB P/J413 and the Toner CRUM Coupler Assembly (M) P/J125 for open circuit, short circuit, and poor contact

- The connection terminals between the Toner Cartridge (M) CRUM PWB and the Toner CRUM Coupler Assembly (M) CRUM for damage and foreign substances
- The Toner Cartridge (M) for improper installation

If no problems are found, replace the following parts in sequence:

- Toner Cartridge (M) (PL 5.1)
- Toner CRUM Coupler Assembly (M) (PL 5.1)
- MCU PWB (PL 18.1)

393-939 Toner CRUM (C) Data Mismatch Fault

BSD-ON: BSD 9.10 - Toner Cartridge Life ControL (C, K)

Incorrect authentication area data was detected in the Cyan Toner CRUM. This fault is displayed if the wrong type of Toner cartridge is installed.

NOTE: *The WC 7220/7225 is shipped with "Worldwide Neutral" Toner Cartridges. When the cartridges shipped with the machine are installed, the machine is set to Worldwide Neutral configuration.When the first toner cartridge (any color) is replaced in the WC 7220/7225, the Geographic Differentiation Code and Toner Cartridge Type in NVM are automatically changed to the same settings as the replacement cartridge. Once these NVM are set, the WC 7220/7225 toner configuration can only be changed with a CRUM conversion.*

One or more Toner Cartridges are of the wrong type (i.e., a "Sold" cartridge installed in a "metered" configured machine.

Initial Actions

Remove and reinstall the Toner Cartridge (C).

Procedure

An Error Message appears on the UI - **Reinsert an improperly seated consumable or replace any consumables with Error. Press Machine Status button and select Supplies tab for details**. Remove and reinstall the Cyan Toner Cartridge and check for improper installation. **The problem continues**

Y **N**

End

Check the NVM locations in Table 1.

Table 1 NVM Values

NVM Location	Name	Values (read-only)
740-053	Geographic Setting	3 = North America/Europe 12 = DMO 15 = Worldwide
740-055	Contract Type	2 = Sold 3 = Metered 31 = Neutral

The NVM values match the expected customer configuration.

Y **N**

Determine correct Contract Type from customer. Contact Technical Support Center or your NTS for the CRUM conversion procedure.

1. Polish the connection terminals between the Toner Cartridge (C) CRUM PWB and the Toner CRUM Coupler Assembly (C) CRUM with dry cloth. (When cleaning, do not use Drum cleaner, etc.)
2. Check the following:
   - The connection between the MCU PWB P/J413 and the Toner CRUM Coupler Assembly (C) P/J126 for open circuit, short circuit, and poor contact

- The connection terminals between the Toner Cartridge (C) CRUM PWB and the Toner CRUM Coupler Assembly (C) CRUM for damage and foreign substances
- The Toner Cartridge (C) for improper installation

If no problems are found, replace the following parts in sequence:

- Toner Cartridge (C) (PL 5.1)
- Toner CRUM Coupler Assembly (C) (PL 5.1)
- MCU PWB (PL 18.1)

393-948 Developer (Y) Install Times Over Fault

BSD-ON:BSD 9.3 - Xero Life Control (Y, M)

The number of Developer (Y) installation mode executions has exceeded the upper limit.

Procedure

Replace the Drum Cartridge (Y) (PL 8.1).

If replacing the Drum Cartridge does not resolve the problem, reload firmware using GP 9.

393-953 Developer (Y) Install Mode Fault

BSD-ON:BSD 9.3 - Xero Life Control (Y, M)

In the Install Developer mode after the installation of the Drum Cartridge (Y), no picture is painted on the patch. (The seal is left unremoved.)

Procedure

Peel off the developer seal from the Drum Cartridge Y).

393-954 Developer (M) Install Mode Fault

BSD-ON:BSD 9.3 - Xero Life Control (Y, M)

In the Install Developer mode after the installation of the Drum Cartridge (M), no picture is painted on the patch. (The seal is left unremoved.)

Procedure

Peel off the developer seal from the Drum Cartridge M).

393-955 Developer (C) Install Mode Fault

BSD-ON:BSD 9.4 - Xero Life Control (C, K)

In the Install Developer mode after the installation of the Drum Cartridge (C), no picture is painted on the patch. (The seal is left unremoved.)

Procedure

Peel off the developer seal from the Drum Cartridge (C).

393-956 Developer (K) Install Mode Fault

BSD-ON:BSD 9.4 - Xero Life Control (C, K)

In the Install Developer mode after the installation of the Drum Cartridge (K), no picture is painted on the patch. (The seal is left unremoved.)

Procedure

Peel off the developer seal from the Drum Cartridge (K).

393-957 Developer (M) Install Times Over Fault

BSD-ON:BSD 9.3 - Xero Life Control (Y, M)

The number of Developer (M) installation mode executions has exceeded the upper limit.

Procedure

Replace the Drum Cartridge (M) (PL 8.1).

If replacing the Drum Cartridge does not resolve the problem, reload firmware using GP 9.

393-958 Developer (C) Install Times Over Fault

BSD-ON:BSD 9.4 - Xero Life Control (C, K)

The number of Developer (C) installation mode executions has exceeded the upper limit.

Procedure

Replace the Drum Cartridge (C) (PL 8.1).

If replacing the Drum Cartridge does not resolve the problem, reload firmware using GP 9.

393-959 Developer (K) Install Times Over Fault

BSD-ON:BSD 9.4 - Xero Life Control (C, K)

The number of Developer (K) installation mode executions has exceeded the upper limit.

Procedure

Replace the Drum Cartridge (K) (PL 8.1).

If replacing the Drum Cartridge does not resolve the problem, reload firmware using GP 9.

393-970 Toner CRUM (Y) Not In Position

BSD-ON:BSD 9.9 - Toner Cartridge Life Control (Y, M)

The Toner CRUM (Y) is not in the proper position.

NOTE: *When turning the power OFF, turn OFF the power switch first and then the main power switch.*

NOTE: *The WC 7220/7225 is shipped with "Worldwide Neutral" Toner Cartridges. When the cartridges shipped with the machine are installed, the machine is set to Worldwide Neutral configuration.When the first toner cartridge (any color) is replaced in the WC 7220/7225, the Geographic Differentiation Code and Toner Cartridge Type in NVM are automatically changed to the same settings as the replacement cartridge. Once these NVM are set, the WC 7220/7225 toner configuration can only be changed with a CRUM conversion.*

One or more Toner Cartridges are of the wrong type (i.e., a "Sold" cartridge installed in a "metered" configured machine.

Procedure

1. Remove and reinstall the Toner Cartridge (Y).
2. Polish the connection terminals between the Toner Cartridge (Y) CRUM PWB and the Toner CRUM Coupler Assembly (Y) CRUM with dry cloth. (When cleaning, do not use Drum cleaner, etc.)
3. Check the following:
   - The connection between the MCU PWB P/J413 and the Toner CRUM Coupler Assembly (Y) P/J124 for open circuit, short circuit, and poor contact
   - The connection terminals between the Toner Cartridge (Y) CRUM PWB and the Toner CRUM Coupler Assembly (Y) CRUM for damage and foreign substances
   - The Toner Cartridge (Y) for improper installation

   If no problems are found, replace the following parts in sequence:
   - Toner Cartridge (Y) (PL 5.1)
   - Toner CRUM Coupler Assembly (Y) (PL 5.1)
   - MCU PWB (PL 18.1)
   - Go to the 393-937 Toner Y CRUM Data Mismatch Fail RAP.

393-971 Toner CRUM (M) Not In Position

BSD-ON:BSD 9.9 - Toner Cartridge Life Control (Y, M)

The Toner CRUM (M) is not in the proper position.

NOTE: *When turning the power OFF, turn OFF the power switch first and then the main power switch.*

NOTE: *The WC 7220/7225 is shipped with "Worldwide Neutral" Toner Cartridges. When the cartridges shipped with the machine are installed, the machine is set to Worldwide Neutral configuration.When the first toner cartridge (any color) is replaced in the WC 7220/7225, the Geographic Differentiation Code and Toner Cartridge Type in NVM are automatically changed to the same settings as the replacement cartridge. Once these NVM are set, the WC 7220/7225 toner configuration can only be changed with a CRUM conversion.*

One or more Toner Cartridges are of the wrong type (i.e., a "Sold" cartridge installed in a "metered" configured machine.

Procedure

1. Remove and reinstall the Toner Cartridge (M).
2. Polish the connection terminals between the Toner Cartridge (M) CRUM PWB and the Toner CRUM Coupler Assembly (M) CRUM with dry cloth. (When cleaning, do not use Drum cleaner, etc.)
3. Check the following:
   - The connection between the MCU PWB P/J413 and the Toner CRUM Coupler Assembly (M) P/J125 for open circuit, short circuit, and poor contact
   - The connection terminals between the Toner Cartridge (M) CRUM PWB and the Toner CRUM Coupler Assembly (M) CRUM for damage and foreign substances
   - The Toner Cartridge (M) for improper installation

   If no problems are found, replace the following parts in sequence:
   - Toner Cartridge (M) (PL 5.1)
   - Toner CRUM Coupler Assembly (M) (PL 5.1)
   - MCU PWB (PL 18.1)
   - Go to the 393-938 Toner M CRUM Data Mismatch Fail RAP

393-972 Toner CRUM (C) Not In Position

BSD-ON:BSD 9.10 - Toner Cartridge Life ControL (C, K)

The Toner CRUM (C) is not in the proper position.

NOTE: *When turning the power OFF, turn OFF the power switch first and then the main power switch.*

NOTE: *The WC 7220/7225 is shipped with "Worldwide Neutral" Toner Cartridges. When the cartridges shipped with the machine are installed, the machine is set to Worldwide Neutral configuration.When the first toner cartridge (any color) is replaced in the WC 7220/7225, the Geographic Differentiation Code and Toner Cartridge Type in NVM are automatically changed to the same settings as the replacement cartridge. Once these NVM are set, the WC 7220/7225 toner configuration can only be changed with a CRUM conversion.*

One or more Toner Cartridges are of the wrong type (i.e., a "Sold" cartridge installed in a "metered" configured machine.

Procedure

1. Remove and reinstall the Toner Cartridge (C).
2. Polish the connection terminals between the Toner Cartridge (C) CRUM PWB and the Toner CRUM Coupler Assembly (C) CRUM with dry cloth. (When cleaning, do not use Drum cleaner, etc.)
3. Check the following:
   - The connection between the MCU PWB P/J413 and the Toner CRUM Coupler Assembly (C) P/J126 for open circuit, short circuit, and poor contact
   - The connection terminals between the Toner Cartridge (C) CRUM PWB and the Toner CRUM Coupler Assembly (C) CRUM for damage and foreign substances
   - The Toner Cartridge (C) for improper installation

   If no problems are found, replace the following parts in sequence:
   - Toner Cartridge (C) (PL 5.1)
   - Toner CRUM Coupler Assembly (C) (PL 5.1)
   - MCU PWB (PL 18.1)
   - Go to the 393-939 Toner C CRUM Data Mismatch Fail RAP

393-973 Toner CRUM (K) Not in Position

BSD-ON:BSD 9.10 - Toner Cartridge Life ControL (C, K)

The CRUM is not correctly positioned in Black toner cartridge (or CRUM is not installed in black toner cartridge).

NOTE: *When turning the power OFF, turn OFF the power switch first and then the main power switch.*

NOTE: *The WC 7120/7125 is shipped with "Worldwide Neutral" Toner Cartridges. When the cartridges shipped with the machine are installed, the machine is set to Worldwide Neutral configuration.*

When the first toner cartridge (any color) is replaced in the WC 7120, the Geographic Differentiation Code and Toner Cartridge Type in NVM are automatically changed to the same settings as the replacement cartridge. Once these NVM are set, the WC 7120/7125 toner configuration can only be changed with a CRUM conversion.

One or more Toner Cartridges are of the wrong type (i.e., a "Sold" cartridge installed in a "metered" configured machine.

Procedure

1. Remove and reinstall the Toner Cartridge (K).
2. Polish the connection terminals between the Toner Cartridge (K) CRUM PWB and the Toner CRUM Coupler Assembly (K) CRUM with dry cloth. (When cleaning, do not use Drum cleaner, etc.)
3. Check the following:
   - The connection between the MCU PWB P/J413 and the Toner CRUM Coupler Assembly (K) P/J127 for open circuit, short circuit, and poor contact
   - The connection terminals between the Toner Cartridge (K) CRUM PWB and the Toner CRUM Coupler Assembly (K) CRUM for damage and foreign substances
   - The Toner Cartridge (K) for improper installation

   If no problems are found, replace the following parts in sequence:
   - Toner Cartridge (K) (PL 5.1)
   - Toner CRUM Coupler Assembly (K) (PL 5.1)
   - MCU PWB (PL 18.1)
   - Go to the 393-926 Toner K CRUM Data Mismatch Fail RAP.

394-417 IBT Unit Near End Warning

The Transfer Belt Unit needs to be replaced soon.

NOTE: *The chain/link fault code for this RAP is an internal machine code and is never displayed or logged in Fault Code History. Use this RAP to troubleshoot persistent machine status conditions that cannot be cleared by performing the indicated process (e.g., loading paper, closing a cover, replacing a CRU, etc). Entry to this RAP is usually via the Machine Status Faults RAP located in the Other Faults section, or a chain/link listing on a BSD.*

NOTE: *When turning the power OFF, turn OFF the power switch first and then the main power switch.*

Procedure

Perform the following:

1. Replace the Transfer Belt Unit and clear dC135 [954-820] (IBT Unit).
2. If the machine status continues to indicates IBT Near End Warning, upgrade or reload firmware using GP 9.
3. Replace the MCU PWB (PL 18.1)
4. Replace the Hard Drive ([PL 35.2])
5. Replace the SBC PWB (PL 35.2)

   NOTE: *If replacing the SBC PWB and the MCU PWB fails to resolve the problem, reinstall the original PWBs and call for service support.*

394-419 2nd BTR Unit Near End Warning

The 2nd BTR needs to be replaced soon.

NOTE: *The chain/link fault code for this RAP is an internal machine code and is never displayed or logged in Fault Code History. Use this RAP to troubleshoot persistent machine status conditions that cannot be cleared by performing the indicated process (e.g., loading paper, closing a cover, replacing a CRU, etc). Entry to this RAP is usually via the Machine Status Faults RAP located in the Other Faults section, or a chain/link listing on a BSD.*

NOTE: *When turning the power OFF, turn OFF the power switch first and then the main power switch.*

Procedure

Perform the following:

1. Replace the 2nd BTR and clear dC135 [954-821] (2nd BTR Unit).
2. If the machine status continues to indicates 2nd BTR Unit Near End Warning, upgrade or reload firmware using GP 9.
3. Replace the MCU PWB (PL 18.1)
4. Replace the Hard Drive ([PL 35.2])
5. Replace the SBC PWB (PL 35.2)

   NOTE: *If replacing the SBC PWB and the MCU PWB fails to resolve the problem, reinstall the original PWBs and call for service support.*

394-420 IBT Unit End Warning

The Transfer Belt Unit must be replaced.

NOTE: *When turning the power OFF, turn OFF the power switch first and then the main power switch.*

Procedure

Perform the following:

1. Replace the Transfer Belt Unit and clear dC135 [954-820] (IBT Unit).
2. If the machine status continues to indicates IBT Unit End Warning, upgrade or reload firmware using GP 9.
3. Replace the MCU PWB (PL 18.1)
4. Replace the Hard Drive ([PL 35.2])
5. Replace the SBC PWB (PL 35.2)

   NOTE: *If replacing the SBC PWB and the MCU PWB fails to resolve the problem, reinstall the original PWBs and call for service support.*

394-422 2nd BTR Unit End Warning

The 2nd BTR must be replaced.

NOTE: *When turning the power OFF, turn OFF the power switch first and then the main power switch.*

Procedure

Perform the following:

1. Replace the 2nd BTR and clear dC135 [954-821] (2nd BTR Unit).
2. If the machine status continues to indicates 2nd BTR Unit End Warning, upgrade or reload firmware using GP 9.
3. Replace the MCU PWB (PL 18.1)
4. Replace the Hard Drive ([PL 35.2])
5. Replace the SBC PWB (PL 35.2)

   NOTE: *If replacing the SBC PWB and the MCU PWB fails to resolve the problem, reinstall the original PWBs and call for service support.*

394-910 IBT Unit Or 2nd BTR Unit Not In Position

BSD-ON:BSD 9.16 - Image Transfer to Pape

Either the IBT Unit or the 2nd BTR Unit is not installed.

NOTE: *When turning the power OFF, turn OFF the power switch first and then the main power switch.*

Procedure

1. Install the IBT Unit or the 2nd BTR Unit.
2. Check the connection between the HVPS P/J520-6 and the MCU PWB P/J410-A7 for open circuit, short circuit, and poor contact.

   If no problems are found, replace the following parts in sequence:

   - HVPS (PL 18.1)
   - MCU PWB (PL 18.1)

395-XXX Software Upgrade Failure - TBD

A fault has occured during software upgrade.

There are approximately 70 chain 95 faults that may occur. Can all these faults be covered by one RAP? The chain 95 codes are in the SBC database, not in Jav/Chgr database. Find equivalent or write new RAP. Can this RAP simply refer to one of the chain 3 RAPs?

Initial Actions

Procedure

Stuff Here **Check here.**

Y **N**

Fix here

Another fix here.

AC Power

BSD-ON:BSD 1.1 - Main Power On (1 of 2)

BSD-ON:BSD 1.2 - Main Power On (2 of 2)

Initial Actions

- Check the AC outlet
- If the GFI Breaker is tripped, reset the breaker. If it trips again, check the AC circuit for a short circuit.

Procedure

Plug in the Power Cord and switch On the Main Power Switch. **AC line voltage is measured between GFI Breaker P/J10 pins 1 and 2 (BSD 1.1 - Main Power On (1 of 2)**

Y N

Disconnect the Power Cord**. AC line voltage is available at the outlet.**

Y N

Check the customer's breaker

Check the Power Cord for open circuit or poor contact. If no problems are found, replace the GFI Breaker, PL 18.1 Item 7

AC line voltage is measured between J1 pins 1 and 3 at the Main LVPS (BSD 1.2 - Main Power On (2 of 2).

Y N

AC line voltage is measured between Main Power Switch **J14 and J15 (BSD 1.1 - Main Power On (1 of 2)**

Y N

AC line voltage is measured between Main Power Switch **J12 and J13.**

Y N

Unplug the Power Cord and disconnect J1 on the Main LVPS. Check for open circuits or poor contacts between:

- GFI Breaker P/J10 pins 1 and Main Power Switch J12
- GFI Breaker P/J10 pins 2 and Main Power Switch J13

Make sure that the Main Power Switch (PL 18.2 Item 2) is operating correctly.

Replace the Main Power Switch, PL 18.2 Item 2

Unplug the Power Cord and disconnect J1 on the Main LVPS (**BSD 1.2 - Main Power On (2 of 2)**). Check for an open circuit or poor contacts between:

- Main Power Switch J14 and Main LVPS J1 pin 3
- Main Power Switch J15 and Main LVPS J1 pin 1

AC line voltage is measured at the Finisher Outlet. BSD 1.2 - Main Power On (2 of 2)

Y N

Turn the power Off and unplug the Power Cord. Replace Fuse F001 (20A/250V) on the Main LVPS.

Turn the power Off and unplug the Power Cord. Replace Fuse F002 (8A/250V) on the Main LVPS.

STBY +5VDC Power

BSD-ON:BSD 1.4 - DC Power Generation (1 of 2)

BSD-ON:BSD 1.2 - Main Power On (2 of 2)

Procedure

Turn the Main Power Switch On, then turn On the power switch. **+5VDC is measured between the Main LVPS J501-7/8/9/10 (+) and GND (-) (BSD 1.4 - DC Power Generation (1 of 2)**

Y N

AC line voltage is measured between J1 pins 1 and 3 at the Main LVPS.

Y N

Go to AC Power.

Turn the power Off and disconnect the Main LVPS J501. Turn On the machine 15sec later. **+5VDC is measured between the Main LVPS J501-7/8/9/10 (+) and GND (-).**

Y N

Replace the Main LVPS, PL 18.1 Item 4

Check the +5VDC circuit for a short circuit in the frame by referring to Chapter 7 Wiring Data.

Check the wire to the applicable component for an open circuit or poor contact by referring to Chapter 7 Wiring Data.

+5VDC Power

BSD-ON:BSD 1.3 - LVPS Control

BSD-ON:BSD 1.2 - Main Power On (2 of 2)

BSD-ON:BSD 1.4 - DC Power Generation (1 of 2)

BSD-ON:BSD 1.7 - DC Power Distribution (Options)

NOTE: *•Turn Off the power switch first, then the main power switch.*

- *When trying to measure the voltage (+5VDC), turn On the power then measure it before the machine goes into the Power Save mode.*

Procedure

Turn the Main Power Switch On, then turn On the power switch. **The voltage between the Main LVPS J502-3/5 (+) and the GND (-) is +5VDC. (BSD 1.7 - DC Power Distribution (Options))**

Y N

AC line voltage is measured between J1 pins 1 and 3 at the Main LVPS. BSD 1.2 - Main Power On (2 of 2)

Y N

Go to AC Power.

Turn the power Off and 127disconnect LVPS connectors J502, J503, and J506. Turn On the machine 15 seconds later. **The voltage between the LVPS J502-3/5 (+) and GND (-) is +5VDC.(BSD 1.7 - DC Power Distribution (Options)**

Y N

The STBY +5VDC Green LED on the SBC PWB is lit. (Figure 1)

Y N

- Ensure that J501 on the Main LVPS and J300 on the SBC are properly seated and that the Wire Harness is not damaged.
- Go to STBY +5VDC Power

The +24VDC Orange LED on the SBC PWB is lit. (Figure 1)

Y N

Check in the following order:

- Ensure that J501 on the Main LVPS and Figure 10 on the SBC are properly seated and that the Wire Harness is not damaged.
- Refer to **BSD 1.3 - LVPS Control** and check the 5V C-F on signal
- Replace the Main LVPS (PL 18.1 Item 4)

Replace the Main LVPS, PL 18.1 Item 4

Check the +5VDC circuit for a short circuit in the frame by referring to Chapter 7 Wiring Data.

Measure voltage of the following:

- Between the Main LVPS J503-7 (+) and the GND (-)
- Between the Main LVPS J506-1 (+) and the GND (-)

All of the voltages are +5VDC.

Y N

Replace the Main LVPS, PL 18.1 Item 4

Check the wire to the applicable component for an open circuit or poor contact by referring to Chapter 7 Wiring Data.

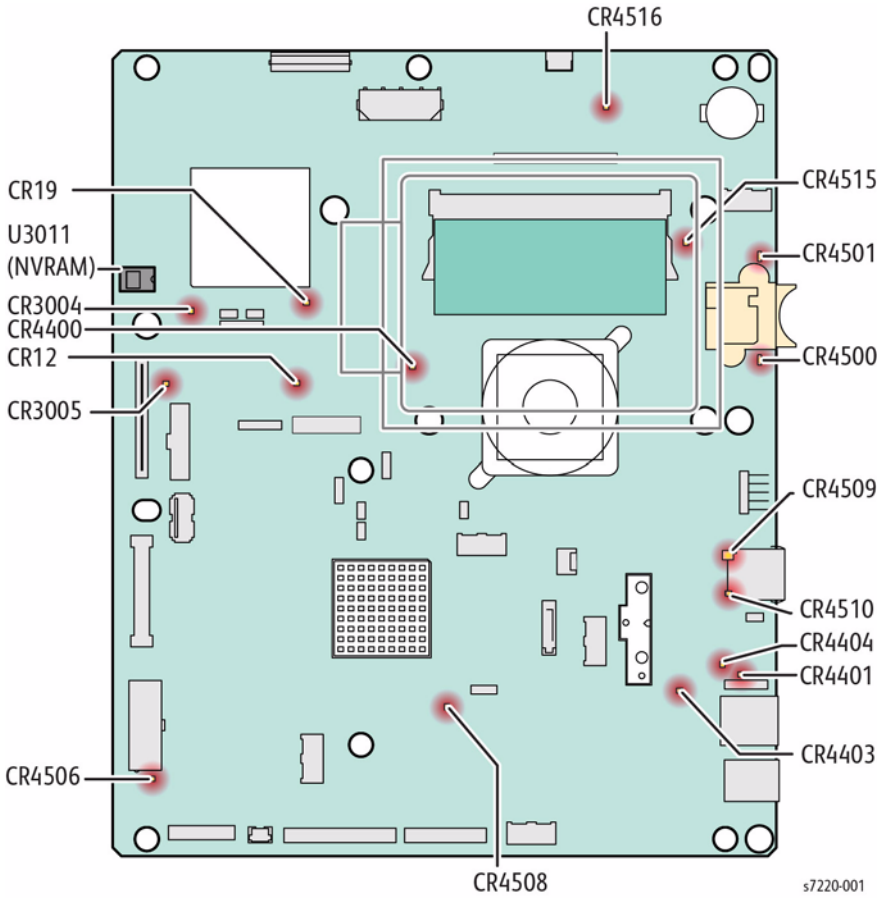

Figure 1 SBC Debug LED Location

+24VDC Power

BSD-ON:BSD 1.3 - LVPS Control

BSD-ON:BSD 1.2 - Main Power On (2 of 2)

BSD-ON:BSD 1.5 - DC Power Generation (2 of 2)

BSD-ON:BSD 1.7 - DC Power Distribution (Options)

NOTE: *When turning the power OFF, turn OFF the power switch first and then the main power switch.*

Procedure

Turn the power ON (turn ON the main power switch then turn ON the power switch). **24VDC is measured between the Main LVPS J501-(6 (+) and the GND (-) (BSD 1.5 - DC Power Generation (2 of 2)**

Y N

AC line voltage is measured between J1 pins 1 and 3 at the Main LVPS. (BSD 1.2 - Main Power On (2 of 2)

Y N

Go to AC Power

Turn the power Off and disconnect the Main LVPS J501, J502, and J503. Turn On the machine 15sec later. **The voltage between the Main LVPS J501-6 (+) and the GND (-) is +24VDC. (BSD 1.5 - DC Power Generation (2 of 2).**

Y N

+5VDC is measured between Main LVPS J502-3/5 (+) and GND (-) (BSD 1.7 - DC Power Distribution (Options)

Y N

+5VDC is measured between Main LVPS J501 pins 7/8/9/10 (+) and GND (-)

Y N

Go to STBY +5VDC Power

Refer to BSD 1.3 - LVPS Control and check the 5V C-F on signal. If the problem continues, replace the Main LVPS (PL 18.1 Item 4).

Replace the Main LVPS (PL 18.1 Item 4)

Check the +24VDC circuit for a short circuit in the frame by referring to Chapter 7 Wiring Data.

Measure voltage of the following:

- Between the Main LVPS J5021/7 (+) and the GND (-)
- Between the Main LVPS J5035/6/8 (+) and the GND (-)

Are all the voltages +24VDC?

Y N

Replace the Main LVPS (PL 18.1)

Check the wire to the applicable component for an open circuit or poor contact by referring to Chapter 7 Wiring Data.

Machine Not Ready

"Machine not ready" is defined as any condition where the machine is not capable of performing its basic tasks (Copy or Print). This does not include failure of ancillary devices (Finishers, IIT, Fax, Paper Trays). "Not ready" ranges from a machine that is totally inert, without any indication of power, to a machine that appears ready but does not respond to either Control Panel commands or Network input.

Procedure

CAUTION

If you replace the SD Card, SBC, or System Hard Drive, perform an AltBoot (GP 9) at the first power-up.

The first step is to categorize the problem. Decide which of the following condition best describes the problem:

- Dead Machine
- Does not complete Boot-up
- Boots up; does not respond to Control Panel
- Boots up; does not print (or other Network problem)

Dead Machine

If the machine shows no sign of power (fans or motors running, backlight on UI display, LEDs on Control panel), check for AC line voltage at the Finisher Outlet.

1. If AC is not present, go to the AC Power.
2. If AC is present, open the SBC Cover PL 35.1. If green LED CR4506 (Figure 1) is **not** lit, go to STBY +5VDC Power.
3. If the machine fails to boot, observe POST progress on the SBC 7-segment display. refer to OF 3.3.

If there is some indication of power from the machine, and the UI remains blank, the problem is likely in the Control Panel Assembly (PL 1.7 Item 1). Use OF 2 UI Touch Screen Failure RAP to diagnose UI problems.

Does not complete Boot-up

Failure to complete the boot routine can be caused by corrupt or mismatched software versions. GP 6 details how to check s/w versions; GP 9 explains how to reload s/w. Boot failures can also be caused by hardware failures in the SBC, or communication failures between the SBC and the rest of the machine. The SBC PWB has a group of diagnostic LEDs that change state as the boot-up progresses.

1. Check the state of the SBC debug LED's, Figure 1. Refer to Table 1 to determine the fault state. If the SBC debug LEDs indicate a problem, replace the SBC (PL 35.2 Item 1).
2. Check the 7-segment display on the SBC PWB. Perform the relevant service actions.
3. If the software appears to load, but the IOT and Finisher platforms are missing on the UI display, replace the MCU PWB (PL 18.1).
4. Switch Off power and disconnect the power cord. Disconnect all accessories (Finisher, H-Transport, Fax, HCF, Tray Module, Foreign Interface). Reconnect power and reboot the machine. If the problem is no longer present, then reconnect one accessory and reboot. Repeat this process to identify the faulty accessory.

Some boot-up failures may be caused by structural flaws in a command sent to the machine. In these cases, it is sometimes possible to bypass or delete the offending code during the startup process.

Boots up; does not respond to Control Panel

Go to OF 2 UI Touch Screen Failure.

Boots up; does not print (or other Network problem)

Go to OF 16-1 RAP

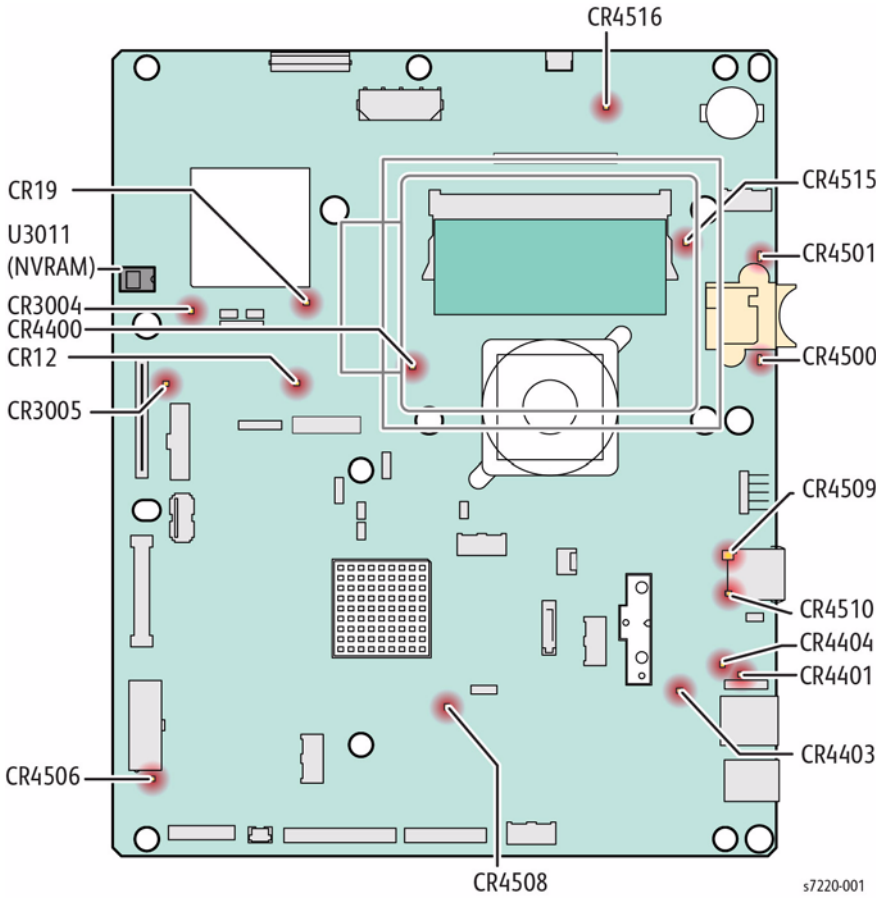

Figure 1 SBC Debug LED Locations

Table 1 SBC Status LEDs

Designator	Color	Purpose	Notes
CR12		Image Path Sleep	On = Image Path in sleep mode. Not used at this time.
CR19	Red	Horizon FPGA DONE	Quick flash at power on of soft switch. LED On after 3 or 4 minutes indicates boot failure. Perform these steps: 1. Reload system software. 2. Reseat or replace SD Card. 3. Replace the SBC.
CR3004		Taurus Boot Failure	Off = Taurus failed to start. LED On solid at power on of soft switch. Flashing after ~1 minute into boot process. LED On after 3 or 4 minutes indicates a boot failure. Perform these steps: 1. Check that U3011 is seated in socket. 2. Reload system software. 3. Replace the SBC.
CR3005		Elnath FPGA Loading	On = FPGA is loading. LED On solid at power on of soft switch. Goes Off after ~1 minute into boot process (Timed with Taurus heart-beat CR3004 above). LED On after 3 or 4 minutes indicates a boot failure. Perform these steps: 1. Check that U3011 is seated in socket. 2. Reload system software. 3. Replace the SBC.
CR4400		CPU Sleep	On = CPU in sleep mode. under software control. A very slow heartbeat blink only when in the deepest sleep mode. CPU sleep indicator only
CR4403		Supervisor heartbeat	With main power switch On and soft power switch Off, this LED blinks a slow heart beat and is the only SBC LED On in this mode. Once soft switch is turned On, the LEDcontin-ues to flash a slow heart beat. No heart beat flash indicates a board power failure. 1. Check the LVPS, or check for +5V using Figure 6 **+5VDC Wirenet (1 of 4)** on the SBC (power connector). 2. If 5V present, replace the SBC.
CR4404	Red	CPU PWR Fail	On if power supply is out of tolerance. Replace SBC.
CR4500	Red	SIM Activity	Blinking = Activity. On solid for ~1 minute at power on of soft switch then goes out unless SIM card inserted.

Table 1 SBC Status LEDs

Designator	Color	Purpose	Notes
CR4501	Green	SIM Activity	Blinking = Activity. On solid for ~1 minute at power on of soft switch then goes out unless SIM card inserted.
CR4506	Green	+5V Power	Always On when the soft switch is On. If OFF when soft switch is On indicates failure. 1. Check status of CR4403 first. 2. If CR4403 flashing, test soft switch input at J1324. 3. If switch input changes, replace the SBC.
CR4508		Maia FPGA Loading	On = FPGA is loading. Quicl flash at power on of soft switch. LED On after 3 or 4 minutes indicates boot failure. Perform these steps: 1. Reload system software. 2. Reseat or replace SD Card. 3. Replace the SBC.
CR4509	Multi	Ethernet link established	Green=1Gb, Yellow=100Mb, Off=10Mb or no link
CR4510	Multi	Ethernet activity	Green On = Any link speed
CR4515		Image Power Good	On solid at power on of soft switch. Remains On during FPGA loading from SD card. Off during sleep mode. Off at boot could indicate corrupt or a failed SD card. 1. Reload system software. 2. Reseat or replace SD Card. 3. Replace the SBC.
CR4516		Electra Power Good	On = Board Power On. On Solid at power on of soft switch. Off during deep sleep mode Goes Off as CR4400 starts its heartbeat flash. Off in any other mode indicates an SBC power failure. Replace the SBC.

Unresettable Machine Status Messages

In many cases when a problem causes a machine status message, no chain-link fault code is entered into either dC120 Fault Counters or dC122 Fault History. Typically these messages involve things like covers , interlock switch circuits and paper tray status.

This RAP can be used to find RAPs that can be used to troubleshoot and repair faults that cause unresettable machine status messages.

NOTE: *When a machine status message occurs frequently or is unresettable and performing the action that would normally resolve the problem fails to resolve it, it is likely that the problem is caused by a repairable hardware fault such as a bent or broken cover, faulty wiring, a failed component, or by a SW fault.*

The RAPs referenced in this procedure do not have their fault code appear in dC120 or dC122.

Do not use the Unresettable Machine Status Messages RAP if an appropriate fault code appears in either of the diagnostic listings.

Procedure

Refer to **Table 1**. The table is grouped by subsystem. Within a particular subsystem, the faults are listed in Fault Code number order.

Perform he following steps in order;

1. Look within the listing for the subsystem that appears to be faulty. Find the displayed UI Message and/or Machine Reaction.
2. Check the items listed in the Clearing Action Column.
3. If performing the Clearing Actions fails to resolve the problem, go to the RAP indicated to troubleshoot the problem.

   NOTE: *If no action is listed go directly to the indicated RAP to troubleshoot the problem.*

Table 1 Machine Status to RAP Cross Reference

Subsystem	UI Message	Machine Reaction	RAP	Fault Cause	Clearing Action
UI	Rewrite Failure	Blink all LED indicators	302-302	Flash rewrite failure	
UI	Erase Failure	Blink all LED indicators	302-306	Flash erase failure	
UI	Download Invalid	Blink all UI LED indicators	302-308	Download invalid	
UI	Application Checksum Failure	Blink Job Stat & Features LED indicators	302-312	Application SW Checksum Failure	
UI	UI Data Time Out Error	A software error has occured. User intervention is reuired to Power Off/Power On the machine. Printing may be disabled	302-320	UI does not receive requested data from the CCM within the specified time out window	One of the printer features requires service, however the printer can still function in a degraded mode.
UI	Config Services not Stable	Printing is disabled and the powering up process has stalled.	302-390	During power up all configurable services have not achieved a stable state after 5 minutes from power up	User Intervention, The printer needs to be rebooted in order to eliminate the current fault.
IIT/Scan	DADF No Original Fail		305-940	Machine detects that original has been removed	Follow UI Display
Integrated Finisher	Finisher Front Door Open	Shut Down/Start Inhibited	312-302 (Integrated Finisher)	Machine detects that FInisher Front Door is open	Check that the FInisher Front Door closes properly
Integrated Finisher	Stacker Mix Stack Detection	Printing Inhibited	312-916 (Integrated Finisher)	A stack of mixed sizes is detected	Verify that the problem is not caused by a stack of mixed sizes
Integrated Finisher	Stacker Tray Staple Set Over Count	Finisher Job not allowed	312-917 (Integrated Finsher)	When stapled sets are ejected to the Stacker Tray: Stapled set count exceeded 30 sets, And Stacker Tray is not positioned at "paperempty" level, And Stacker Height Sensor is turned on or information on the 30th sheet of the next job is received from IOT.	Remove Paper

Table 1 Machine Status to RAP Cross Reference

Subsystem	UI Message	Machine Reaction	RAP	Fault Cause	Clearing Action
Integrated Finisher	Scratch Sheet Compile	Finisher Job not allowed	312-928 (Integrated Finisher)	A sheet which was designated as a bad sheet (scratchsheet) by SheetInformation command from IOT was ejected to the complier.	Remove Paper
Integrated Finisher	Stacker Tray Full Stack	Finisher Job not allowed	312-930 (Integrated Finisher)	Stacker Height Sensor is detected full condition	Remove Paper
LX Finisher	Finisher Front Door Open	Shut Down/Start Inhibited	312-302 (LX)	Machine detects that FInisher Front Door is open	Check that the FInisher Front Door closes properly
LX Finisher	H-Xport Cover Open	Printing Inhibited	312-303 (LX)	Machine detects that Horizontal Transport Cover is open	Check that the Horizontal Transport Cover closes properly
LX Finisher	Punch Dust Nearly Full	No Action	312-700 (LX)	Machine detects that the Punch Waste Box is nearly full	Check that the Punch Waste Box is not nearly full
LX Finisher	Stacker Mix Stack Detection	Printing Inhibited	312-916 (LX)	A stack of mixed sizes is detected	Verify that the problem is not caused by a stack of mixed sizes
LX Finisher	Stacker Tray Staple Set Over Count	Finisher Job not allowed	312-917 (LX)	When stapled sets are ejected to the Stacker Tray: Stapled set count exceeded 30 sets, And Stacker Tray is not positioned at "paperempty" level, And Stacker Height Sensor is turned on or information on the 30th sheet of the next job is received from IOT.	Remove Paper
LX Finisher	Scratch Sheet Compile	Finisher Job not allowed	312-928 (LX)	A sheet which was designated as a bad sheet (scratchsheet) by SheetInformation command from IOT was ejected to the complier.	Remove Paper
LX Finisher	Stacker Tray Full Stack	Finisher Job not allowed	312-930 (LX)	Stacker Height Sensor is detected full condition	Remove Paper
LX Finisher	Punch Dust Full		312-963 (LX)	Punch Dust Box is detected to be full	Check the Punch Dust Box
LX Finisher	Booklet Low Staple F	Printing Inhibited	312-984 (LX)	Booklet Stapler Low Staple F signal was found to be on when staple started working. or Booklet Stapler Low Staple F signal was found to be on at power on or when interlock was closed.	Check the Front Booklet Stapler
LX Finisher	Booklet Low Staple R	Printing Inhibited	312-989 (LX)	Booklet Stapler Low Staple R signal was found to be on when staple started working. or Booklet Stapler Low Staple R signal was found to be on at power on or when interlock was closed.	Check the Rear Booklet Stapler

Table 1 Machine Status to RAP Cross Reference

Subsystem	UI Message	Machine Reaction	RAP	Fault Cause	Clearing Action
LX Finisher	Booklet Safety Switch Open		313-306 (LX)	Booklet Safety SW (located under Booklet) detects OPEN (with obstacles).	Check the Booklet Safety Switch
LX Finisher	Booklet Cover Open		313-307 (LX)	Booklet Cover SW detects OPEN.	Check the Booklet Cover Switch
Paper Handling	Front Cover Interlock Open	None	377-300	Interlock Switch operation failure or Latch failure	Verify that closing the cover does not resolve the problem
Paper Handling	Left Hand Cover Interlock Open	None	377-301	Interlock Switch operation failure or Latch failure	Verify that closing the cover does not resolve the problem
Paper Handling	Tray Module Left Hand Cover Open	Printing Inhibited	377-305	Interlock Switch operation failure or Latch failure	Verify that closing the cover does not resolve the problem
Paper Handling	Duplex Door Open		377-307	Interlock Switch operation failure or Latch failure	Verify that closing the cover does not resolve the problem
Paper Handling	Upper Left Door Open		377-308	Interlock Switch operation failure or Latch failure	Verify that closing the door does not resolve the problem
Paper Handling	Lower Left Door Open	Display Status Message	377-309	Interlock Switch operation failure or Latch failure	Verify that closing the cover does not resolve the problem
Xerographics/ Cleaning	Waste Bottle Near Full		391-400	Waste Bottle Near Full has been detected by Toner Near Full Sensor	Check that the Toner Wate Bottle does not need replacing
Xerographics/ Cleaning	Drum Cartridge K Near Life		391-401	The number of K Drum Cycles (CRUM) is compared with the threshold value (CRUM) and "Drum Cartridge K replacement timing" is detected.	Check the HFSI value and determine if it is within the value for Drum Replacement timing. If it is, replace the drum.
Xerographics/ Cleaning	Drum Cartridge K Life Over		391-402	Drum Cartridge Life over. Life is being extended.	Check the HFSI value and determine if it is within the value for Drum Replacement timing. If it is, replace the drum.
Xerographics/ Cleaning	Drum Cartridge Y Near Life		391-411	The number of Y Drum Cycles (CRUM) is compared with the threshold value (CRUM) and "Drum Cartridge Y replacement timing" is detected.	Check the HFSI value and determine if it is within the value for Drum Replacement timing. If it is, replace the drum.
Xerographics/ Cleaning	Drum Cartridge M Near Life		391-421	The number of M Drum Cycles (CRUM) is compared with the threshold value (CRUM) and "Drum Cartridge M replacement timing" is detected.	Check the HFSI value and determine if it is within the value for Drum Replacement timing. If it is, replace the drum.
Xerographics/ Cleaning	Drum Cartridge C Near Life		391-431	The number of C Drum Cycles (CRUM) is compared with the threshold value (CRUM) and "Drum Cartridge C replacement timing" is detected.	Check the HFSI value and determine if it is within the value for Drum Replacement timing. If it is, replace the drum.

Table 1 Machine Status to RAP Cross Reference

Subsystem	UI Message	Machine Reaction	RAP	Fault Cause	Clearing Action
Xerographics/ Cleaning	Drum Cartridge Y Life Over		391-480	Drum Cartridge Life over. Life is being extended.	Check the HFSI value and determine if it is within the value for Drum Replacement timing. If it is, replace the drum.
Xerographics/ Cleaning	Drum Cartridge M Life Over		391-481	Drum Cartridge Life over. Life is being extended.	Check the HFSI value and determine if it is within the value for Drum Replacement timing. If it is, replace the drum.
Xerographics/ Cleaning	Drum Cartridge C Life Over		391-482	Drum Cartridge Life over. Life is being extended.	Check the HFSI value and determine if it is within the value for Drum Replacement timing. If it is, replace the drum.
Xerographics/ Cleaning	Waste Bottle Not in Position	Print operation inhibited	391-910	Waste Bottle Not in Position has been detected by the Waste Bottle Sensor	Check that the Toner Wate Bottle is in postition
Xerographics/ Cleaning	Waste Bottle Full	Print operation inhibited	391-911	"Waste Bottle Full" has been detected by elapse of the specified drive time (NVM) of YMCK Dispense Motor after Waste Bottle Near Full occurrence.	Check that the Toner Wate Bottle does not need replacing
Xerographics/ Cleaning	Drum Cartridge K Life End	Print operation inhibited	391-913	The number of K Drum Cycles (CRUM) is compared with the threshold value (CRUM) and "Drum Cartridge K replacement timing" is detected.	Check the HFSI value and determine if it is within the value for Drum Replacement timing. If it is, replace the drum.
Xerographics/ Cleaning	Drum Cartridge Y Life End	Print operation inhibited	391-932	The number of Y Drum Cycles (CRUM) is compared with the threshold value (CRUM) and "Drum Cartridge Y replacement timing" is detected.	Check the HFSI value and determine if it is within the value for Drum Replacement timing. If it is, replace the drum.
Xerographics/ Cleaning	Drum Cartridge M Life End	Print operation inhibited	391-933	The number of M Drum Cycles (CRUM) is compared with the threshold value (CRUM) and "Drum Cartridge M replacement timing" is detected.	Check the HFSI value and determine if it is within the value for Drum Replacement timing. If it is, replace the drum.
Xerographics/ Cleaning	Drum Cartridge C Life End	Print operation inhibited	391-934	The number of C Drum Cycles (CRUM) is compared with the threshold value (CRUM) and "Drum Cartridge C replacement timing" is detected.	Check the HFSI value and determine if it is within the value for Drum Replacement timing. If it is, replace the drum.
ProCon	Y Toner Cartridge is Empty		024-923	The CRU Manager has generated the message Yellow toner cartridge is empty.	Replace toner cartridge. If the Toner Empty message occurs even when remaining toner is not low, perform Toner Recovery operation first to see if Toner Empty state is canceled or not.

Table 1 Machine Status to RAP Cross Reference

Subsystem	UI Message	Machine Reaction	RAP	Fault Cause	Clearing Action
ProCon	M Toner Cartridge is Empty		024-924	The CRU Manager has generated the message Magenta toner cartridge is empty.	Replace toner cartridge. If the Toner Empty message occurs even when remaining toner is not low, perform Toner Recovery operation first to see if Toner Empty state is canceled or not.
ProCon	C Toner Cartridge is Empty		024-925	The CRU Manager has generated the message Cyan toner cartridge is empty.	Replace toner cartridge. If the Toner Empty message occurs even when remaining toner is not low, perform Toner Recovery operation first to see if Toner Empty state is canceled or not.
ProCon	Yellow Toner Cartridge is near empty state (replace soon)		393-400	The CRU manager has generated the message “Yellow Toner Cartridge is near empty state (replace soon)”	Fault code is cleared when toner recovery operation is successfully completed after front interlock is opened/closed (or when toner recovery is successfully completed at power off/on)
ProCon	Magenta Toner Cartridge is near empty state (replace soon)		393-423	The CRU manager has generated the message “Magenta Toner Cartridge is near empty state (replace soon)”	Fault code is cleared when toner recovery operation is successfully completed after front interlock is opened/closed (or when toner recovery is successfully completed at power off/on)
ProCon	Cyan Toner Cartridge is near empty state (replace soon)		393-424	The CRU manager has generated the message “Cyan Toner Cartridge is near empty state (replace soon)”	Fault code is cleared when toner recovery operation is successfully completed after front interlock is opened/closed (or when toner recovery is successfully completed at power off/on)
ProCon	Black Toner Cartridge is near empty state (replace soon)		393-425	The CRU manager has generated the message “Black Toner Cartridge is near empty state (replace soon)”	Fault code is cleared when toner recovery operation is successfully completed after front interlock is opened/closed (or when toner recovery is successfully completed at power off/on)
ProCon	Black Toner Cartridge is empty		393-912	The CRU Manager has generated the message Black toner cartridge is empty.	Replace toner cartridge. If the Toner Empty message occurs even when remaining toner is not low, perform Toner Recovery operation first to see if Toner Empty state is canceled or not.
Transfer	IBT Unit Near End Warning		394-417	This fault code is issued when the following condition is met. (IBT unit present count (NVM)) > (IBT unit life (NVM)) - (Page count before end of life warning (NVM))	Fault Code is cleared ater replacing the IBT Unit.

Table 1 Machine Status to RAP Cross Reference

Subsystem	UI Message	Machine Reaction	RAP	Fault Cause	Clearing Action
Transfer	2nd BTR Unit Near End Warning		394-419	This fault code is issued when the following condition is met. (2nd BTR unit present count (NVM)) > (2nd BTR unit life (NVM)) - (Page count before end of life warning (NVM))	Fault Code is cleared ater replacing the 2nd BTR Unit.

Toner CRUM Mismatch

NOTE: *The WC 7220/7225 is shipped with "Worldwide Neutral" Toner Cartridges. When the Cartridges shipped with the machine are installed, the machine is set to Worldwide Neutral configuration.*

When the first toner cartridge (any color) is replaced in the WC 7220/7225, the Geographic Differentiation Code and Toner Cartridge Type in NVM are automatically changed to the same settings as the replacement cartridge. Once these NVM are set, the WC 7220/7225 toner configuration can only be changed with a CRUM conversion

One or more Toner Cartridges are of the wrong type (i.e., a "Sold" cartridge installed in a "metered" configured machine.

Procedure

1. Press the **Machine Status** button on the Control Panel.
2. Select **Supplies**.
3. The UI displays **Cartridge Error** for the mismatched cartridge.
4. Go to the Fault Code for the color that displays an error:
   - 393-937 Toner Y CRUM Data Mismatch Fail RAP
   - 393-938 Toner M CRUM Data Mismatch Fail RAP
   - 393-939 Toner C CRUM Data Mismatch Fail RAP
   - 393-926 Toner K CRUM Data Mismatch Fail RAP

Output is Blank in All Modes

This problem may be caused by a problem with the ROS, wiring between the ROS and the SBC PWB, or ROS interface circuits.

Use this RAP only if all of the following condition are met:

- The machine output is blank in all modes of operation
- No related fault code is listed in either dC120 Fault Counter or dC122 Fault History. In particular, check for Fault Codes related to ROS operation.
- There is no other indication of a problem such as an unresettable machine status message.

  NOTE: *If there is a persistent machine status message (one that connot be reset by performing the action that would normally reset the message), go to the Unresettable Machine Status Messages RAP.*

Procedure

Perform the following in order (refer to BSD 6.8 - ROS Laser Control (1 of 2)):

1. Ensure that the connector P/J328 on the SBC PWB is securely connected.
2. Ensure that the connector LD_P/J402 on the LD PWB is securely connected.
3. Check the wiring and the connectors between P/J328 and LD_P/J402 for poor connections or open circuits.
4. Replace the SBC PWB (PL 35.2).
5. Replace the Hard Drive (PL 35.2).
6. Replace the Replace the ROS (PL 2.1).

OF 2 UI Touch Screen Failure RAP

Use this RAP to solve user interface touch screen problems when the machine has power but either the display is Black, blank, too dark, responds incorrectly or does not refresh.

Initial Actions

- If the UI is Black, check for +24V to the UI I/F PWB.
- Check and re-seat all PJ's on the UI I/F PWB.
- If the UI is blank (White), check that the SBC SD Card is seated correctly.
- Reseat SBC power and UI connections.
- Refer to ADJ 4.1 to access touch screen tests.
- Press the Machine Status key. Select the Tools tab. Select Device Settings, then Display Brightness. Adjust the brightness level.
- If the UI fails to boot, observe POST progress on the SBC 7-segment display. refer to OF 3.3.

Procedure

Refer to **BSD 2.1 - UI** and **BSD 3.4 - SBC - UI Communication** and check the +5V from PJ352, pin 29 on the SBC to P/J1, pin 29 on the UI I/F PWB. **+5V is measured.**

Y **N**

Check the ribbon cable between the SBC and the UI I/F PWB. Install a new cable if necessary. If the wiring is good, locate the +5V supply and correct the problem.

Check the status of CR4404 on the SBC. **The LED is Off.**

Y **N**

Check the Main LVPS. If SBC power is available, replace the SBC.

Reload the machine software, GP 9. **The fault remains.**

Y **N**

Complete Final Actions.

Check that the ribbon cables between the UI I/F PWB and touch screen are in good condition and securely connected. As necessary, install new components:

- Control Panel Assembly, PL 1.7 Item 1
- SBC, PL 35.3 Item 2

OF 3.3 Power On Self Test (POST)

Power on Self Test (POST) runs each time the machine is powered on. POST tests the function of key SBC subsystems before starting the operating system. As POST executes, progress codes appear on the SBC 7-segment display, Figure 1.

This procedure uses POST to help diagnose system faults preventing the machine from booting correctly. On power up, the SBC 7-segment display is used to report POST test results as a series of codes. Following POST testing, normal operation is indicated by a flashing decimal point. If any other code remains after testing, an error was detected in the indicated subsystem.

CAUTION

If you replace the SD Card, SBC, or System Hard Drive, perform an AltBoot (GP 9) at the first power-up.

Procedure

NOTE: *If boot failure occurs after new components are installed, make sure the new components are compatible with the machine and all connectors are secure.*

1. Locate the SBC 7-segment display, Figure 1, then cycle system power.
2. Observe activity on the 7-segment display. If a failure occurs during POST, one of the codes listed in Table 1 remains to indicate the error. Follow the indicated service action.

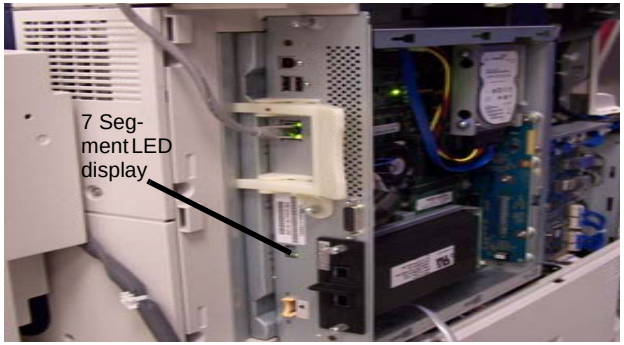

Figure 1 SBC 7-segment LED Location

Table 1 SBC 7-segment Display Codes

Test	Decimal Point	Code	Description	Service Action	Comments
Display Test	8	On	Initial 7-Segment display test. All segments and decimal point illuminate to verify operation.	1. Check power to the SBC. 2. If power present, replace the SBC.	All segments lit indicate a successful test, power is available to the SBC and the 7-segment display is operating correctly. If one or more segments are not lit and the external USB LED is ON (FAIL) = Display is faulty. If one or more segments are not lit and external USB LED is OFF (FAIL) = SBC or power distribution fault.
SBC power	P	Off	SBC onboard power supply failure.	1. Cycle power. 2. If the problem persists, replace the SBC.	Displayed when an onboard power supply fault occurs.
SBC function	1	Off	SBC component failure.	1. Cycle power. 2. If the problem persists, replace the SBC.	Displayed when an onboard component fault occur.
System Memory	2	Flashing	System Memory (DIMM) Failed	1. Reseat System Memory. 2. If problem persists, replace the System Memory Module. 3. If problem still persists, replace the SBC.	**2** appears at start then, if successful, changes to 0. On failure 2 remains displayed with no decimal point flashing indicating that U-boot cannot execute out of SDRAM. SDRAM not present or faulty.
EPC Memory	3	Flashing	EPC Memory Failed	1. Cycle power. 2. If problem persists, replace the SBC.	Indicates onboard EPC Memory is faulty, 3 appears on failure, else the screen is left unchanged. Boot continues. ***NOTE:*** *Another indication of faulty EPC is a White screen on the UI panel.*
NVM	4	Flashing	NVM Memory (SD Card) Failed	1. Reseat SD Card. 2. If problem persists, replace the SD Card. 3. If problem still persists, replace the SBC.	NVM read/write sample test. **4** appears on error, else display is left unchanged.

Table 1 SBC 7-segment Display Codes

Test	Decimal Point	Code	Description	Service Action	Comments
SD Card	5	Flashing	Flash Memory Failed	1. Reseat SD Card. Cycle power to verify fix. 2. If problem still persists, replace the SD Card. 3. If problem still persists, replace the SBC.	Kernel image corrupted - board does not boot. 5 is displayed just before the test start then set to 9 just before jump to kernel. Flash fault could be a h/w or s/w issue. Boot code resides in the SD card.
External Hard Drive	6	Flashing	External Hard Drive Failed	1. Reseat SATA data/power cable on both ends. 2. If problem persists, replace the SATA cable. 3. If problem still persists, replace the Hard Drive. 4. If problem still persists, replace the SBC.	SATA cable and or Hard Drive fault. SATA initalization run, 6 displayed on error.
RTC Module	7	Flashing	Failed Real Time Clock	1. Replace the RTC battery. 2. If problem persists, replace the SBC.	Check RTC before EPC is initialised, then read clock again. Display 7 on error.
Initial entry to kernel	0	Flashing	Waiting for Power Normal	None, no POST fault detected	After successful memory test the display is set to 0 and remains 0 if autoboot is interrupted by user. If there is no user interrupt 0 remains until the Power Normal signal is raised (after POST has completed (~25s). If Power Normal is not raised or u-boot does not handover to kernel then 0 will also remain displayed.
Boot complete	9	Flashing	Boot process handover to kernal		9 indicates kernel load has started. If 9 persists, the kernel s/w has failed to start. ***NOTE:*** *If a previous error was detected, that error persists on the display following handover to kernel.*
Kernel starting	u	Flashing	Kernel starting userspace		Kernel s/w has started. When u remains flashing, the CCS Application has not started.
UI platform available	A	Flashing	UI platform available		On power up, the 7-segment display cycles through these codes until the relevant platform has fully synchronised with the system. Any code left displayed after power up indicates this event has not been detected in software and is likely a s/w issue. F is only displayed if a Fax card is physically FITTED and detected by the s/w. F is removed when the s/w gets a "platform available" response from the fax s/w.
IIT communication	b	Flashing	IIT communication established		
NC Platform availabl	C	Flashing	NC Platform available		
Dc platform available	d	Flashing	Dc platform available		
IOT communication	E	Flashing	IOT communication established		
FAX communication	F	Flashing	FAX communication established		
Attempting sleep entry	L	Flashing	OS suspending drivers, entering sleep	None, for diagnostic information only	On system sleep entry an L is briefly displayed while drivers are suspended. The display changes to an r when in deep sleep.
In Sleep state	r	Off	Resting in sleep	None, for diagnostic information only	Display an r when in deep sleep. Decimal point stops flashing in deep sleep.
In semi-concious state	t	Flashing	Running in Low Power mode	None, for diagnostic information only	Display t in semi-concious mode between Sleep and Wake.
Attempt sleep wake-up	H	Flashing	OS resuming drivers	None, for diagnostic information only	When leaving deep sleep, display changes from 'H' to 't'. From semi-conscious (t) the machine either fully wakes and blanks the display, or goes back to deep sleep (r).
Machine at Ready	Blank	Flashing	No Faults Detected	Normal operation	If blank, in Ready mode, no faults detected.

OF 9-1 RegiCon Measurement Cycle

Initial Actions

Determine the type of fault (refer to Table 1):

- lateral DC
- process DC
- lateral AC
- process AC

Table 1 Registration Measurement Results

Parameter	Range	Target Value
Shift length of lateral DC (IN)	-500~+500	-50 or more, +50 or less
Shift length of process DC (IN)	-500~+500	-126 or more, +126 or less
Shift length of lateral AC (IN)	-500~+500	+ 175 or less
Shift length of process AC (IN)	-500~+500	+ 313 or less
Shift length of lateral DC (OUT)	-500~+500	-50 or more, +50 or less
Shift length of process DC (OUT)	-500~+500	-126 or more, +126 or less
Shift length of lateral AC (OUT)	-500~+500	+ 175 or less
Shift length of process AC (OUT)	-500~+500	+ 313 or less
Number of detection of patterns (IN)	0~12	More than the value of NVM 760-047
Number of detection of turns (OUT)	0~12	More than the value of NVM 760-047

Procedure

NOTE: *If both AC and DC problems are reported, troubleshoot AC first.*

NG is reported for one or more AC parameters

Y N

The problem is with one or more Process DC parameter(s)

Y N

If the trouble continues to occur, faulty frame (bend etc.) can be considered

Compare the values for **Shift length of process DC (IN)** and **Shift length of process DC (OUT)**.

Determine if:

- both parameters exceed the target value in Table 1

  AND

A

A

- The polarity of the 2 parameters is opposite (Example: Shift length of process DC (IN) = +140, and Shift length of process DC (OUT) = -130)

The result meet the criteria listed above

Y N

Perform ADJ 9.12.

NOTE: *Ignore "OK", "NG"*

The result displayed is "25" or less for all Items.

Y N

Replace the MOB/ADC Sensor Assembly

If the trouble continues to occur, replace IBT belt module.

Check for contamination, toner buildup, or damage at the bearing (Figure 1), Inner cover (Figure 2), or Frame V slot for the affected color(s). Clean, repair or replace as required. If the problem persists perform the following, in sequence until the problem is resolved, then perform ADJ 9.9 Registration Control Setup Cycle:

1. If the trouble continues to occur, replace Drum Cartridge of the applicable color.
2. If the trouble continues to occur, replace IBT belt module.
3. If the trouble continues to occur, replace ROS Assy.
4. Replace the Hard Drive (PL 35.2)
5. (Only when lateral DC is NG) if the trouble continues to occur, replace SBC PWB.
6. Replace MCU PWB (PL 18.1).

The NG item is an AC Process.

Y N

Replace Transfer belt. If the trouble continues to occur, replace IBT module.

Replace the applicable color Drum Cartridge.

.If the trouble continues to occur, replace DRIVE ASSY.

Figure 1 Xerographic CRU bearing

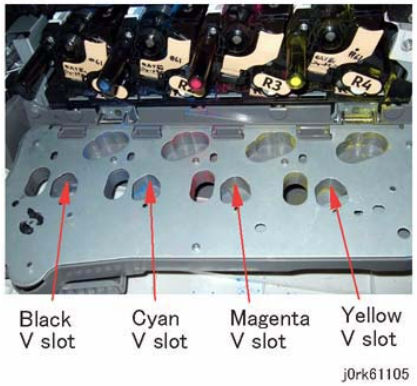

Figure 2 Inner cover V slot

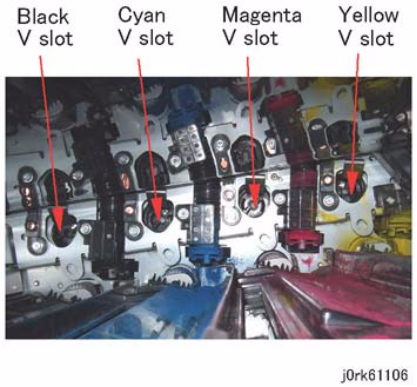

Figure 3 Frame V slot (inboard)

OF 13-1 Secure Access

Overview

Xerox Secure Access uses an external device, such as a card reader or biometric device, to authorize access to the machine. This reader then passes the information to the controller, which handles the authentication process including, which GUI screens are displayed, accepting GUI responses, that defines their content and order. The controller can pass user identities and passwords directly to the machine after gathering the data from an external server. All communication is via a secure network link, Figure 1 Network Diagram.

Xerox Secure Access shall be controlled via the CentreWare Internet Services GUI. The active status is displayed in tools within Access Control. If communication cannot be established with the Xerox Secure Access Server the service may be temporarily disabled by touching the now enabled Off button within the Xerox Secure Access tools window. Once communication is reestablished the stored Xerox Secure Access setting shall be restored.

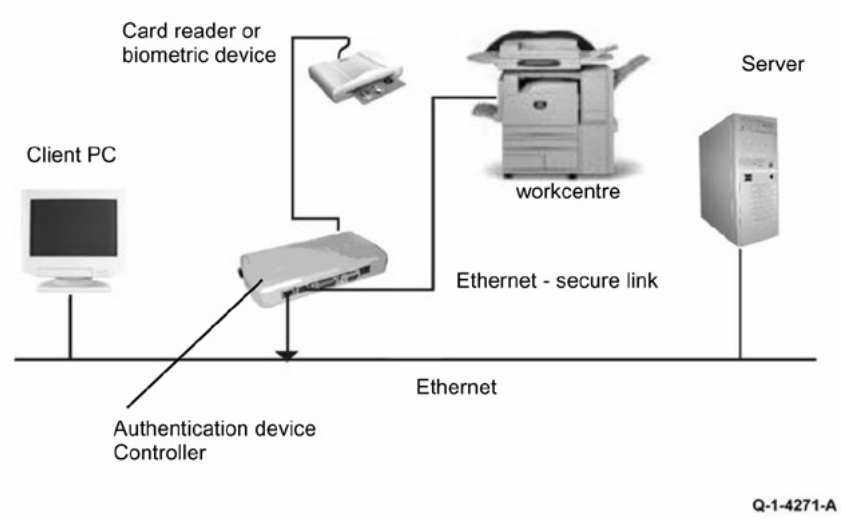

Figure 1 Network Diagram

Initial Action

Before working on the Xerox Secure Access, check out the machine in the service mode to insure no faults are displayed and that the machine is functioning properly. If it is not, repair any problems before proceeding with diagnosing the Secure Access Accessory. Diagnostics can be entered to test copier functionality when Secure Access is installed.

Perform the following steps

- Check the connection between the Card Reader and the Secure Access Authentication Device.
- Check for the LED's are on or blinking on the Secure Access Authentication Device. If the LEDs on the Secure Access Authentication Device are not operating, go to Secure Access Authentication Device Failure.

- Check for the LED's are on or blinking on the Card Reader. If the LEDs on the Card Reader are not operating, go to Card Reader Failure.
- If customers have problems of install / setting up, or any other problems related to their Secure Access Administrator, they should refer to the Secure Access System Administrator's Guide or contact Xerox Technical Support.

Secure Access Authentication Device Failure

The primary failure modes are power problems or failed hardware components. The symptom of these failures can be detected by observing the LEDs on the Secure Access Authentication Device, Figure 2.

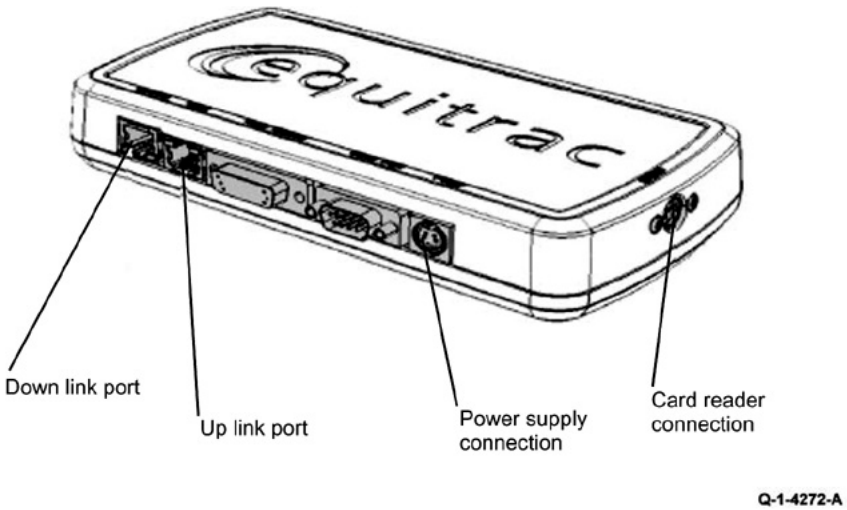

Figure 2 Authentication Device

Check the power to the Secure Access Authentication Device.

- Check the power supply at the wall socket. If there is no power at the wall socket, have the customer restore power and continue when confirmed.
- Disconnect the power cord from the wall socket and the power supply. Check the power cord for continuity and damage. If necessary install a new power cord. Disconnect the power cord from the power supply and plug the power cord into the wall outlet. Using a multimeter, check for line voltage at the end of the power cord disconnected from the power supply. If there is power at the wall but not at the end of the power cord. Install a new power cord.
- Disconnect the small power cord from the Secure Access Authentication Device. Check there is +5V at the connector that plugs into the Secure Access Authentication Device. If there is no +5V, install a new power supply.
- There is a 'Keyed' switch on the end of the Secure Access Authentication Device. Obtain the key from the customer. Insert the key into the 'keyed' switch and cycle the switch 1 quarter turn clockwise and then back to its start position. Observe the LEDs and listen for an audible tone.
- If the LEDs on the Secure Access Authentication Device "Uplink" and "Downlink" Ethernet ports do not cycle on and off as the controller goes through its boot-up process, or if the audible tone is not heard. Install a new Secure Access Authentication Device.

  NOTE: *A new device will require the Secure Access Administrator to reconfigure the server with the new MAC address for the new part. Be sure to inform the Secure Access Administrator of the MAC address of the device being removed and the MAC address of the new device.*

Card Reader Failure

The primary failure modes are power problems or failed hardware components. The symptom of these failures can be detected by observing the LED on the Card Reader. Refer to Table 1.

- The Green LED on the Card Reader is On
- The Green LED on the Card Reader Flashes Rapidly
- The Red LED on the Card Reader is On
- The Red LED on Card Reader Flashes Slowly
- The Red LED on Card Reader Flashes Rapidly
- The Card Reader LED's are not On or Blinking

Table 1 LED Symptom Descriptions

When the LED on the card Reader is	Description
Red	The authentication device is in idle mode; there is no active session.
Green	The authentication device is in ready mode; a session is active.
Slow Flashing Red	The authentication device has no connection to the server.
Slow Flashing Green	The authentication device is communicating to the server.
Fast flashing red	Invalid card / password; access denied.

The Green LED on the Card Reader is On

- This indicates an active Secure Access Session and the Card Read correctly corresponds to a valid Secure Access Account.
- If the UI on the machine is locked, check with the customer for a second PIN number for additional security. This PIN number will need to be entered via the soft keys on the UI.
- Ensure that the card corresponds to a valid Secure Access Account.

The Green LED on the Card Reader Flashes Rapidly

- This indicates a valid card swipe and in the process of authentication on the server.
- If the UI on the machine is locked, check with the customer for a second PIN number for additional security. This PIN number will need to be entered via the soft keys on the UI.

- If the UI on the machine is locked and no secondary PIN is required. Check that the Xerox Secure Access is installed correctly, and ask customer to check the configuration at the server.

The Red LED on the Card Reader is On

- This indicates the Card Reader is in an idle state. If the red LED remains on, and the UI remains locked after a card is swiped, re-orient the card and re-swipe.
- Try a known good card in the reader. If the other card is working on the problem Card Reader. Ask customer to make sure the card corresponds to a valid Secure Access Account.
- Try the card in a known good reader. If the card is working on a known good Card Reader, it may be a problem with the Secure Access Authentication Device. Check to see is the LEDs on the Secure Access Authentication Device are on.

The Red LED on Card Reader Flashes Slowly

- This indicates the reader is connected to the controller but the controller is not connected to the server. Check the Ethernet green LED on the Authentication Device.
- If the Ethernet green LED on the Authentication Device is off, make sure the connectors of the LAN connections are working properly. If the connections are working, this indicates the network may not work properly. Ask customer to check with Network Administrator.
- If the Ethernet green LED on the Authentication Device is either on or flashing, contact the Secure Access Administrator

The Red LED on Card Reader Flashes Rapidly

- This indicates a valid card but does not correspond to a valid Secure Access Account at the server, test with a known valid user's card.
- If all cards react the same way, this indicates the Server Configuration may not be correct. Ask customer to check the Server Configuration.
- If all the card react this way, this indicates the cards are not valid. Ask customer to check the Server Configuration

The Card Reader LED's are not On or Blinking

- Check to see is the Secure Access is correctly installed.
- If there is still no LED on the Card Reader, install a new the Card Reader.

NOTE: *If there is another working card reader available, the readers can be switched to confirm failure. If the Card Reader is not functioning, the web page of the machine has a setting that will enable UI keypad access. If the users know their card access number, they can use the machine by manually entering their number. The process is as follows:*

1. Go to the machine web page under properties and then security and check the box that says "Allow local user interface initiation".
2. Enable the keypad and test with valid credentials. This will validate the rest of the secure access function.
3. Leave it in this mode until the new card reader can be installed.

OF 16-1 Network Printing Problems Entry

This Procedure is provided to help identify and diagnose network printing problems.

Initial Actions

- Ensure the machine is online.
- Ensure that no IOT faults exist that prevent the IOT from functioning. That is, copies can be made, or prints can be printed with Print Test Pattern on the PWS or made from the UI in Tools mode.

Determine the following:

- Are any jobs printing on the printer?
- Is the problem related to one workstation?
- Is the problem related to one job?
- Have any changes been made to the network prior to a printing problem?
- Was a backup log of network configuration data created? If so, was it last created by a CSE or the customer/SA?

If there are multiple protocols enabled on the printer, and the problems are ONLY occurring with one network protocol, go to the procedure appropriate for that protocol:

- NOVELL: OF 16-2, Novell Netware Checkout RAP
- TCP/IP: OF 16-3, TCP/IP Checkout RAP
- APPLETALK: OF 16-4, Appletalk Checkout RAP
- NETBIOS: OF 16-5, Netbios Checkout RAP

Procedure

No printing occurs (jobs won't print, can't see printer, or can't connect to printer)

Y N

If, instead of job printing normally, there is a literal printing of the PDL (many pages of code, go, or if the job prints, but looks wrong (wrong fonts, missing fonts, other image quality problems), go to the OF 16-9, Job Prints Incorrectly RAP.

The problem occurs in all print jobs from all clients.

Y N

The problem occurs in a specific job from all clients.

Y N

The problem occurs in all jobs from a specific client or group of clients,

Y N

If the problem is with a specific job from a specific client, the problem is likely with the client; either not connected to the network, wrong or old driver, bad application files or a hardware failure in the client.

If no printing can be done from a specific client or group, while other clients or group function normally, the likely cause is a problem in the customer's network.

If the problem is specific to a single application or group of applications, ensure that current drivers are loaded.

If the problem occurs in only one job, go to the OF 16-8 .

A

A

Check that the printer is physically connected to the network cable and that the cable/connections are OK. Disconnect and reseat the cable at both ends. Check to see if the problem is corrected. **The problem continues.**

Y N

Return to Service Call Procedures.

Go to GP 7 (Network Printing Simulation) and send a print job. **An acceptable print is produced.**

Y N

- verify machine settings
- reload system software
- If the problem continues, reseat the SBC System Memory and System Disk Cable.
- If the problem continues, replace the following (PL 35.2) in order until the problem is resolved:
  - System Disk Cable
  - SBC System Memory
  - Hard Drive (PL 35.2)
  - SBC PWB
  - System Disk

Print out a Configuration Report (GP 6). Review the NetWare, TCP/IP, Apple Talk, and Microsoft Networking (NETBIOS) settings. **At least one networking protocol is enabled.**

Y N

The printer is not installed properly. Inform the customer/system administrator that the printer needs to be installed and setup for the appropriate networking protocol.

Go to dC312 and check for a selectable protocol (not grayed out). **There is at least one selectable protocol.**

Y N

Switch off the machine power to reboot the SBC. When machine is ready, select dC312 again. Check for a selectable protocol (not grayed out). **There is at least one selectable protocol.**

Y N

When machine is ready, select dC312 again. Check for a selectable protocol (not grayed out).

Check for a selectable protocol. (Not grayed out) **There is at least one selectable protocol.**

Y N

Go to GP 9 and perform the Regular AltBoot procedure.

Verify that the problem is corrected. If the problem continues, return to the start of this procedure.

Verify that the problem is corrected. If the problem continues, return to the start of this procedure.

Select **Start**. Observe the test results. **The test passed.**

Y N

Switch the machine power off/on to reboot the SBC. Select Switch off the machine power to reboot the SBC. When machine is ready, select dC312 again. Select the desired protocol and select **Start**. **The test passed.**

Y N

Perform the following:

- There may be a problem with the network port. Ask the system administrator to test the port.
- If the problem continues, reseat the SBC System Memory and System Disk Cable.
- Go to GP 9 and perform the Regular AltBoot procedure.
- If the problem continues, replace the following ((PL 35.2) in order until the problem is resolved:
  - System Disk Cable
  - SBC System Memory
  - Hard Drive (PL 35.2)
  - SBC PWB
  - System Disk
- If the problem continues, have the customer/System administrator replace the network drop cable.

Go to the appropriate RAP for the network protocol type that failed the Echo test.

- NOVELL: OF 16-2, Novell Netware Checkout RAP
- TCP/IP: OF 16-3, TCP/IP Checkout RAP
- APPLETALK: OF 16-4, Appletalk Checkout RAP
- NETBIOS: OF 16-5, Netbios Checkout RAP

Verify that the problem is corrected. If the problem continues, go to GP 9 and perform the Regular AltBoot procedure.

B

B

CAUTION

The AltBoot procedure (GP 9) will delete all stored data on the System Disk Drive, including E-mail addresses, Xerox Standard Accounting data, and network configuration information. ***ALWAYS*** *clone the machine (GP 13), if possible, before performing AltBoot. If the machine failure is such that cloning is not possible, ensure that the customer is aware of the data loss.*

Reload software via AltBoot (GP 9). **The problem continues.**

Y N

Return to Service Call Procedures.

Select the most appropriate from the following:

- Jobs Won't Print, Can't See Printer, Can't Connect to Printer
  - NOVELL: OF 16-2, Novell Netware Checkout RAP
  - TCP/IP: OF 16-3, TCP/IP Checkout RAP
  - APPLETALK: OF 16-4, Appletalk Checkout RAP
  - NETBIOS: OF 16-5, Netbios Checkout RAP
- A particular Job Won't Print - go to the OF 16-8 , Problem Printing Job RAP
- Instead of job printing normally, there is a literal printing of the PDL (many pages of cryptic code) - Go to the OF 16-9, Job Prints Incorrectly RAP
- Job prints, but looks wrong. Wrong fonts, missing fonts, other image quality problems - Go to the OF 16-9, Job Prints Incorrectly RAP

Check for SMB Failure

The following describes the possible causes, check procedures, and corrective actions when a failure occurs when SMB is used.

1. Check at [Printer Not Found]

Table 1 Printer Not Found

Cause	Check Method	Corrective Action
The operation protocols of the computer and main processor are different.	Though the printer can be found when search is performed using [Search Other Computer] ([**Start**] > [Search] > [Other Computers], it cannot be found in [Network Computers].	Match the SMB transport protocols (NetBEUI, TCP/IP) of the main processor and each computer.
Networks (subnets) are different.	Though the printer can be found when search is performed using [Search Other Computer] ([**Start**] > [Search] > [Other Computers], it cannot be found in [Network Computers].	When the main processor and the computer are in different networks, check with the System Administrator.
The host name set in the main processor already exists.	Print the "System Settings List". Check that "Host name duplicated" is described in the SMB status information.	Use CentreWare Internet Services to change the host name to an unduplicated name or return the main processor settings to default.

2. Check at [Print Not Available]

Table 2 Print Not Available

Cause	Check Method	Corrective Action
The main processor is processing a print request from another computer. (When [Do not spool] is set for [Receiving Buffer])	Check that the main processor is processing a print. (A write error dialog appears indicating that there are no areas to stored the files in queue.)	After print process has been completed in the main processor, issue a print request or switch the main processor setting to the spool mode.
The number of connections in the main processor exceeds the maximum value.	The port connection is also being held when the printer is paused due to no paper because it is held since a job request has been issued to Net until printing is complete. Check the maximum number of sessions of SMB from the EWS "Protocol" menu to check that the jobs more than "maximum number of sessions" were requested at the same time at site.	Wait for a while and issue the same print request again. Or, check the number of users that can use the machine at the same time and set the maximum number of sessions to an appropriate value from the EWS "Protocol" menu.

3. Check at [Documents Cannot Be Deleted from [Printer] Window]

Table 3 Documents Cannot Be Deleted

Cause	Check Method	Corrective Action
Try to delete all the print data displayed in [Printers] window. (This can only be done by the administrator of this machine.)	From the "Printers" menu, check if the print data is tried to be deleted. ([Clear Print Jobs] menu)	Select the print data to be deleted and delete the print data from [Documents] menu in the [Printers] window. ([Cancel Job] menu)
There are different print data owners.	Check that the name displayed [Owner] of the selected print data matches the login name who has logged in to Windows.	Log in to Windows using the name displayed in [Owner] of the print data to delete the data.
Service Pack 4.0 or later is not installed. (For Windows NT 4.0)	Check the version of Service Pack, which is displayed at start up of Windows NT 4.0.	Install Service Pack version 4.0 or later.

4. Check [Machine Settings]
   a. IP addresses are managed in a whole system. Consult with the Network Administrator thoroughly before perform setting.
   b. Depending on the network environment, set the subnet mask and gateway settings only if necessary. Consult with the Network Administrator to set necessary settings.
   c. If a memory becomes insufficient when [Enabled] is set for the port status, the port status may be automatically reset to [Disabled]. BIn this case, [Disabled] an unused port or change the memory allocated capacity.
   d. Depending on the usage environment, set the receiving buffer capacity [SMB (Spool)] size. When the receiving buffer capacity [SMB (Spool)] size is smaller than the sent data, the data may not be able to be received.
5. Check [Computer Settings]
   a. IP addresses are managed in a whole system. Consult with the Network Administrator thoroughly before perform setting.
   b. To perform network settings (such as IP address), etc. on the host used under NIS (Network Information Service) management, consult with the NIS Administrator.
6. Check at [Power OFF]

   Before turning the machine OFF, take note of the following:
   a. When [Memory] is set for [SMB (Spool)]

      All the print data including the data being printed that have been spooled in the machine memory will be deleted.

      When turning the power ON again, no print data remains. However, if the power is turned OFF immediately after print instruction, the print data may be stored on the computer.

      In this case, even if a new print instruction is issued after the power is turned ON, the stored print data will be printed first.
   b. When [Hard Disk] is set for [SMB (Spool)]

      All the print data including the data being printed that have been spooled in the machine hard disk will be saved.

      When the power is turned ON again and a new print instruction is issued, the stored print data will be printed first.
   c. When [Do not spool] is set for [SMB (Spool)]

      All the print data including the data being printed that have been spooled in the machine receiving buffer will be deleted. When the power is turned ON again, no print data remains.

      However, if the power is turned OFF immediately after print instruction, the print data may be stored on the computer.

      In this case, even if a new print instruction is issued, the stored print data will be printed first.

7. Check [At Printing]
   a. When [Hard Disk] or [Memory] is set for [SMB (Spool)]

      When the machine starts receiving print data and the print data size is larger than the hard disk or memory remaining capacity, the print data will not be received.

      NOTE: *If the print data exceeds the receiving capacity, some computers will resend data immediately. In this case, the computer looks like stopped. As a corrective action for this, abort sending the print data on the computer.*

   b. When [Do not spool] is set for [SMB (Spool)]

      When a print request is received from a computer, the print requests from other computers cannot be received.

   c. When a computer IP address or name has been changed

      When a computer IP address or name has been changed, the inquiry and cancellation of processes from the main processor cannot be performed properly. Turn the machine OFF then ON when no print data is stored in the machine receiving buffer.

      NOTE: *The print cancel/forced output processes of the print data stored in the machine receiving buffer can be operated from the machine Operation Panel. Refer to "11 Job Check" in "User Guide" for more information on how to operate.*

   d. When the machine is in the offline state

      When the machine is in offline state and a print instruction is issued from a computer, the data will not be received in the machine, and an error dialog box appears on the computer indicating that write error has occurred. However, for SMB, the print data can be received from the computer even when the machine is offline.

   e. Deleting Jobs

      For Windows NT 4.0, jobs can be deleted when Service Pack 4.0 or later is installed. When a job is deleted while data is being received, write error appears. In this case, the [Retry] button on the error dialog box is not available.

Check for NetWare Failure

The following describes the possible causes, check procedures, and corrective actions when a failure occurs when NetWare is used.

1. Check at [Printing Not Performed]

Table 4 Printing Not Performed

Cause	Check Method	Corrective Action
The network configuration devices (HUB etc.) do not match the automatic settings of the frame type.	Check that the data link lamp of the network configuration device port that is connected to the machine is lit on. Check that the same frame types are used in the file servers that exist on a network.	Set the frame type that has been set for the file server to be connected from the machine.
A failure has occurred on the network from a workstation to a printer.	Use NWADMIN from the workstation to check that the target printer objects can be viewed.	Replace the non-communicating network cable that exists between the workstation and the printer.
The user name of a job sender or the group name to which the job sender belongs is not registered in the [Users] for Print queue.	Use NWADMIN from the workstation to view the target queue objects and check that the user name of the job sender or the group name to which the job sender belongs is registered in the [Users] information.	1. Resend print data to the print queue in which the user name of the job sender or the group name to which the job sender belongs has been registered in [Users] of [Print Queue Information]. 2. Use NWADMIN from the workstation to register the user name of the job sender or the group name to which the job sender belongs in the [Users] of [Print Queue Information].
Sending jobs to the print queue is prohibited.	Use PCONSOLE to check that [Yes] is set for [User can register data to queue] in the [Current Queue Status] of [Print Queue Information].	Set it to [Yes] using PCONSOLE.
Same as above	Use NWADMIN from the workstation to check that the operator flag is checked in [Identification] for the target print queue.	Use NWADMIN from the workstation to check that the each item for the operator flag is checked in [Identification] for the target print queue.
The user name of a job sender or the group name to which the job sender belongs is not defined for the print server users of a print server.	Use NWADMIN from the workstation to check that the user name of the job sender or the group name to which the job sender belongs is registered in [Users] of the target print server.	1. Resend print data to the print queue in which the user name of the job sender or the group name to which the job sender belongs has been registered in [Users] of [Print Server Information]. 2. Use NWADMIN from the workstation to register the user name of the job sender or the group name to which the job sender belongs in the [Users] information of the target print server.
The print queue that has sent print data is not allocated to the printer.	Use NWADMIN from the workstation to check that the target printer is allocated in the list of the printers in service in [Allocation] of the target print queue.	1. Resend print data to the print queue that has been allocated to the printer. 2. Use NWADMIN from the workstation to add a target queue using [Allocation] of the target printer.

Table 4 Printing Not Performed

Cause	Check Method	Corrective Action
The data type of the print data does not match the print environment settings of the workstation.	-	When the workstation uses Windows, make settings so that it does not output Ctrl-D.
The number of print queues that exceeds the maximum number of supported queues has been set.	Use NWADMIN from the workstation to check that the desired print queue is allocated in the list of the printers in [Allocation] of the target printer.	Resend print data to the print queue that has been allocated to the printer.
No slave file servers have been set (bindery service mode).	Use PCONSOLE from the workstation to check that a slave file server is registered in [Service NetWare Server] of the appropriate print server in [Print Server Information].	Use PCONSOLE from the workstation to register a slave file server and then reflect the setting parameters.
Printer types are different.	Use PCONSOLE from the workstation to check that Port: LPT1 and Position: Auto Mode (Local) are set in [Print Server Information] > [Printers] > [Environment Settings for Printer xxx].	Use PCONSOLE from the workstation to set Port: LPT1 and Position: Auto Mode (Local), and reflect the setting parameters.
The slave file server settings are different (bindery service mode).	Use PCONSOLE from the workstation to check that [Defined by Other Settings] is displayed for the printer type in [Print Server Information] > [Printers] > [Environment Settings for Printer xxx].	If it is not set to [Defined by Other Settings], change it to [Defined by Other Settings] and then reflect the setting parameters.
The sheet number of the print data is different from the sheet number that has been set in the printer.	Use NWADMIN from the workstation to select a target printer and then check that the start sheet number in the environment settings is the same as the number of the print data.	Use NWADMIN from the workstation to match the number for [Start Sheet] with the number of the print data in the environment settings for the target printer.
IPX check sum level settings are different.	Use the set command in the file server console screen to check the IPX check sum is not set to Level 2.	Enter the following command in the file sever console screen to set the IPX check sum to Level 0 or Level 1. Set Enable IPX Checksum=x (x: 0 or 1)
NCP packet signature level settings are different.	Use the set command in the file server console screen to check the NCP packet signature is not set to Level 3.	Enter the following command in the file sever console screen to set the NCP packet signature to Level 0, 1, or 2 and then restart the file server. Set NCP Packet Signature Option=x (x: 0, 1, or 2)
The default device name setting is wrong.	Print "System Settings List" to check the lower 6 digits (3 bytes) of the Ethernet address.	1. Use a correct Ethernet address to set the device name. 2. Set the device name to other than the default value.
No directory tree name is set.	Print the "System Settings List" to check if a tree name is set.	Set a tree name.
Context is not set in place.	Print the "System Settings List" to check if a context is set.	Set the Context.
Another printer object has been connected.	Use NWADMIN from the workstation to check that a correct object has been allocated in the Layout Information of the desired print server.	1. Use the CentreWare Utilities CD-ROM from the workstation to set the file server name/tree/context/operation mode correctly. 2. Use the CentreWare Internet Services from the workstation to set the file server name/tree/context/operation mode correctly.
The NetWare port is not enabled.	Print the "System Settings List" to check if the NetWare port is enabled.	Enable the NetWare port.
The file server is down.		Search for a target file server from [Network Computers].
A printer with the same device name exists on a network.	Turn OFF the machine and use NWADMIN from the workstation to check that the appropriate printer object status is set to job standby.	Use the CentreWare Utilities CD-ROM from the workstation to set a different device name.
The NetWare port is not enabled.	Print the "System Settings List" to check if the network number remains [0000000] (NetWare server down) when the IPX/SPX is being used. Also check if the IP address remains [0.0.0.0] (Fixed IP address not set, or address providing server (DHCP) is down) when TCP/IP is used.	For IPX/SPX, activate the NetWare server. For TCP/IP, set a fixed IP address or activate the address providing server (DHCP).

2. Check at [Printing not performed as desired]

Table 5 Printing not performed as desired

Cause	Check Method	Corrective Action
Different printer languages are set in the print data and the main processor.	Check the printer language in the main processor.	Match the printer languages set in the print data and the main processor.

3. Check at [Printer failure not notified]

Table 6 Printer failure not notified

Cause	Check Method	Corrective Action
The notifier is not registered in the notifier list of the print server.	Use PCONSOLE from the workstation to check that the user name of a job sender or the group name to which the job sender belongs is registered in [Print Server Information] > [Printers] > [Environment Settings for Printer xxx] > [Notification].	Register the user name of a job sender or the group name to which the job sender belongs in [Notification].

4. Check at [Job completion not notified]

Table 7 Job completion not notified

Cause	Check Method	Corrective Action
The NOTIFY option was not set for sending print data from a workstation.	Check that the NOTIFY option is set for sending print data.	Set the NOTIFY option for sending print data from a workstation.
NetWare CASTOFF was executed on the user workstation.	-	Execute NetWare CASTON on the user workstation.

Check for TCP/IP (LPD) Failure

The following describes the possible causes and actions when a failure occurs when TCP/IP (LPD) is used.

1. For Windows95, Windows98 and Windows Me

Table 8 Windows95, Windows98 and Windows Me

Cause	Status Display	Check Method	Corrective Action
The machine is connected to a network that is different from the computer.	Printing Not Available status (Network Error)	Check with the Network System Administrator that a router or gateway exists between the network in which the computer is connected and the network in which the machine is connected.	Connect the machine directly to the network in which the computer is connected.
Connection cannot be established due to the failure on the network from a computer to the printer.	Printing Not Available status (Network Error)	None.	Request the Network System Administrator to check for any network failures.
The machine was turned OFF after print instruction had been issued from a computer. Or, a print instruction was issued from a computer when the machine is turned OFF.	Printing Not Available status (Network Error)	Check that the machine is turned ON.	Turn ON the machine.

Table 8 Windows95, Windows98 and Windows Me

Cause	Status Display	Check Method	Corrective Action
Print instructions are issued from multiple computers to the machine at the same time.	Printing Not Available status (Network Error)	None.	None (printing will be automatically resumed).
Print files cannot be spooled due to insufficient computer disk capacity.	Printing Not Available status (Spool Error)	Open [My Computer] and right-click the disk in which the system is installed (e.g. Drive C). Select [Properties] from the displayed menu to check the free disk space.	Delete unnecessary files to secure the disk free space. Then, select [Pause] from the [Documents] menu of the [Printers] window to clear the pause status (resumes printing).

2. For Windows NT 4.0, Windows2000, Windows Xp, and Windows Server 2003

   When no printing is available or desired printing is not performed, follow the check procedures described below to take the corrective actions.

Table 9 Windows NT 4.0, Windows2000, Windows Xp, and Windows Server 2003

Cause	Check Method	Corrective Action
Incorrect IP address is set.	Ask the Network Administrator to check if the IP address set in this machine is correct.	Set a correct IP address in the machine.
When the LPD spool is set for a memory spool, the print data size in a single print instruction sent from a computer exceeds the upper limit of receivable capacity.	Check the LPD spool memory capacity and compare it with the print data capacity that is tried to send in a single print instruction.	1. If the print data capacity exceeds the memory capacity upper limit, split the file into smaller sizes than the memory capacity upper limit and then send the print instruction. 2. If multiple print data capacities exceed the memory capacity upper limit, reduce the number of files to be sent for printing at the same time.
A failure that cannot be repaired has occurred during printing.	Check if an error is displayed on the Operation Panel display.	Turn the power OFF then ON. Wait for the display to light off and turn ON the power again.
The transport protocol that matches the computer is not selected.	Check the selected transport protocol.	Select the transport protocol that matches the computer.
The data type of the print data the machine tries to process is different from the data type of the print data sent from a computer.	-	Make settings so that Ctrl-D will not be output.
The specified printer language is different from the printer language of the print data.	Check the specified printer language and the printer language of the print data.	Specify the printer language that matches the printer language in the print data.
The printer driver attached to the machine is not used (a printer driver from other manufacturers is used).	Check if the printer driver that was provided with this machine has been selected.	Select the printer driver that was provided with this machine. If it is not found in the selection items, install and select the printer driver that was provided with this machine.

Precautions and Limitations

The following describes the precautions and limitations for TCP/IP (LPD).

Machine Settings

- IP addresses are managed in a whole system. Consult with the Network Administrator thoroughly before perform setting.
- Depending on the network environment, perform the subnet mask and gateway settings if necessary. Consult with the Network Administrator to set necessary settings.
- If a memory becomes insufficient when [Enabled] is set for the port status, the port status may be automatically reset to [Disabled]. In this case, [Disabled] an unused port or change the memory allocated capacity.
- Depending on the usage environment, set the receiving buffer capacity [lpd (Spool)] size.

  When the receiving buffer capacity [lpd (Spool)] size is smaller than the sent data, the data may not be able to be received.

Computer Settings

- IP addresses are managed in a whole system. Consult with the Network Administrator thoroughly before perform setting.
- To perform network settings (such as IP address), etc. on the host used under NIS (Network Information Service) management, consult with the NIS Administrator.

At Power OFF

Before turning the machine OFF, take note of the following:

- When [Memory] is set for [lpd (Spool)]

  All the print data including the data being printed that have been spooled in the machine memory will be deleted. When the power is turned ON again, no print data remains.

  However, if the power is turned OFF immediately after print instruction, the print data may be stored on the computer. In this case, even if a new print instruction is issued after the power is turned ON, the stored print data will be printed first.
- When [Hard Disk] is set for [lpd (Spool)]

  All the print data including the data being printed that have been spooled in the machine hard disk will be saved. When the power is turned ON again and a new print instruction is issued, the stored print data will be printed first.
- When [Do not spool] is set for [lpd (Spool)]

  All the print data including the data being printed that have been spooled in the machine receiving buffer will be deleted. When the power is turned ON again, no print data remains.

  However, if the power is turned OFF immediately after print instruction, the print data may be stored on the computer. In this case, even if a new print instruction is issued after the power is turned ON, the stored print data will be printed first.

At Printing

- When [Hard Disk] or [Memory] is set for [lpd (Spool)]

  When the machine starts receiving print data and the print data size is larger than the HDD spool area or memory remaining capacity, the print data will not be received.

  NOTE: *If the print data exceeds the receiving capacity, some computers will resend data immediately. In this case, the computer looks like stopped. As a corrective action for this, abort sending the print data on the computer.*
- When [Do not spool] is set for [lpd (Spool)]

  When a print request is received from a computer, the print requests from other computers cannot be received.
- When a computer IP address or name has been changed

  When a computer IP address or name has been changed, the inquiry and cancellation of processes from the main processor cannot be performed properly. Turn the machine OFF then ON when no print data is stored in the machine receiving buffer.

  NOTE: *The print cancellation/forced output processes of the print data stored in the machine receiving buffer can be operated from the machine Operation Panel. Refer to "11 Job Check" in "User Guide" for more information on how to operate.*

Check for Centreware Internet Services Failure

The following describes the situations and corrective actions when a failure occurs when "CentreWare Internet Services" is used.

Table 10 CWIS

Symptoms	Corrective Action
Cannot be connected to "CentreWare Internet Services".	Check that the machine is operating properly. Check that the machine is turned ON.

Table 10 CWIS

Symptoms	Corrective Action
Same as above	Check that "Internet Services" is activated. Print the "System Settings List" for checking.
Same as above	Check that the Internet address has been entered properly. Check the Internet address again. If connection is not successful, enter the IP address and try connection.
Same as above	Check if a proxy server is used. Some proxy servers disable connection. When proxy server is not used, set the Web browser to "Do not use proxy server" or set the used address to "Do not use proxy server".
[Wait for a while] appears and stays.	Wait for a while without any action. If the situation has not been changed, select the [Refresh] button. If the situation does not change after selecting the [Refresh] button, check if the machine is operating properly.
The [Refresh] button is not functioning. Or, even if a menu in the left frame is selected, the right frame cannot be refreshed.	Check that the specified Web browser is used. Refer to "Communication (Port/Protocol) Setting Items in CentreWare Internet Services" in User Guide to check the used Web browser is supported.
The screen display collapses.	Change the Web browser window size.
The latest information is not displayed.	Select the [Refresh] button.
Selecting the [Apply new settings] button does not reflect settings.	Check that the entered values are correct. If invalid values have been entered, they are automatically changed to values within the limit range.
Same as above	Check that the machine is operating or has completed operation using the machine Operation Panel. If Auto Reset function is set, the settings in CentreWare Internet Services will not be applied until the specified time has passed. Wait for a while.
Selecting [Apply new settings] button displays a message such as [Invalid or unrecognizable response was returned from the server] or [No data found] on the Web browser.	1. Check if the password is correct. The password confirmation entry does not match. Enter a correct password. 2. Restart the machine.
Jobs cannot be deleted.	Wait for a while and then select the [Refresh] button.

Check for Scanning Failure

1. When a document is retrieved from a Mailbox
   - If [Save] is set for [Delete Document After Retrieval], multiple clients can access to the same document.
   - If [Delete] is set for [Delete Document After Retrieval], only 1 client can access to the same document. The document stored or read by a client cannot be viewed from the other clients.

     In both cases, documents can be added to the accessed Mailbox.

- The documents that have been retrieved using CentreWare Internet Services will not be deleted regardless of the setting in [Delete Document After Retrieval].

2. Screen Display

   When the document with a lot of colors is scanned, they cannot be displayed properly in the display mode that displays using fewer colors than the scanned colors. Use the display mode that allows displaying using more colors than the colors used in the image.

3. A network scanner driver and Mailbox Viewer 2 are used at the same time.

   When a computer uses a network scanner driver and Mailbox Viewer 2 at the same time, the computer cannot connect to the printer.

   When multiple computers use the network scanner drivers or Mailbox Viewer 2 to retrieve documents from the same machine at the same time, up to 3 computers can be connected.

4. When the documents stored in Mailbox is printed

   When stored documents are to be printed (the documents are to be retrieved) by selecting [Mailbox] from the machine touch panel display, scanned documents cannot be printed.

5. When a TIFF file is used

   The TIFF files that have been created using CentreWare Scan Services or Mailbox Viewer 2 are compressed using the MMR, MH, JBIG, or JPEG compression method. To open a TIFF file, use the application software applicable for those compression methods.

   NOTE: *JBIG compressed TIFF files cannot be created in Mailbox Viewer 2.*

6. Restrictions on Scan Capacity and No. of Sheets

   The maximum read capacity for a page is 297x432mm. A3 or 11”x17" for the standard size

The Mailbox method allows up to 999 sheets to be read in a single scan operation.

Check for Mail Failure

Corrective Action

The following describes the corrective actions for troubles when Mail Notice Service, Print E-mail, or Scanner (Send E-mail) is used.

Table 11 Mail Failure

Symptoms	Corrective Action
Cannot receive mails (Print E-mail)	1. Check that the machine mail address has been set. 2. Check that [Receive E-mail] is set to [Enabled]. 3. Check that the SMTP server IP address and the POP3 server IP address (when POP3 is selected for receiving protocol), etc. are set properly. 4. Check that the POP user name and password are set properly. 5. Check that [Domain List] has been set. Check that the user's domain is included in the receive-allowed domains using CentreWare Internet Services. 6. Check that the SMTP and POP servers are operating properly. Check with the Network Administrator.

Table 11 Mail Failure

Symptoms	Corrective Action
Mails cannot be sent (Mail Notice, Scanner (Send E-mail))	1. Check that the machine mail address has been set. 2. Check that [Mail Notice Service] is set to [Enabled]. (For mail notice) 3. Check that [Send E-mail] is set to [Enabled]. 4. Check that the SMTP server IP address etc. is set properly. 5. Check that the notification items to be sent have been set correctly. (For Mail Notice) Check settings from the CentreWare Internet Services Properties screen. 6. Check that the send destination mail address has been entered properly. 7. Check that the SMTP server is operating properly. Check with the Network Administrator.

OF 16-2 Novell Netware Checkout

Use this RAP if the printer is enabled for Novell Netware protocol, but there are problems printing to it.

It is assumed that before entering here that the IOT is known to be OK.

Perform OF 16-1 , Network Entry RAP before using this RAP.

Initial Actions

Question the system administrator and determine if any changes have been made to the machine Network Setup or the network.

Procedure

Determine if the problem is occurring on multiple workstations. **Only one workstation is unable to print.**

Y N

Have the customer/system administrator run **pconsole.**

Check Print Queue, Attached Print Servers. **The print server is attached to the queue.**

Y N

Check Print Queue, Status.

Ensure the flag that indicates that new print servers can attach to queue is set to yes. **The flag is set to Yes.**

Y N

Have the customer/system administrator set the flag to Yes.

There may be a problem with the Network and Connectivity Setup on the printer. If a configuration report has not already been run, do so now (GP 6). Consult with the system administrator and ensure that the following Netware settings are correct on the printer:

- IPX Frame Type is correct (Ethernet Only)
- Primary Server name is correct (Bindery Only)
- NDS Tree and Context is correct (Netware 4.x, or later, NDS Only)
- Print Server name is correct
- A Print Server password is set and the same password is set for the print server object on the NDS tree

All settings are OK.

Y N

Go to Connectivity and Network Setup. Make Changes as appropriate.

Switch the machine power off/on to reboot the SBC. Check for a reoccurrence of the problem. **The problem continues.**

Y N

Done. Return to Service Call Procedures.

Go to GP 9 and perform the Regular AltBoot procedure.

Go to GP 9 and perform the Regular AltBoot procedure.

Check the following:

A

A

- In **pconsole,** check Print Queue, Print Queue Information, Status. Ensure that the following two flags are set to Yes.
  - Print servers can service jobs in the queue
  - Users can add jobs to the queue

  NOTE: *Administrator or Print Queue Operator rights are required to make these changes.*

- Notify customer/system administrator. There may be a network problem or a problem with the client workstation.

The problem occurs only on one job.

Y N

Have the customer or system administrator check the workstation configuration. There may be a network problem or a problem with the client workstation.

Have the customer or system administrator reload the print driver on the affected workstation. Ensure that the problem is corrected. If the problem continues, escalate the call to the Customer Service Center (CSC).

A

OF 16-3 TCP/IP Checkout

Use this RAP if the printer is enabled for TCP/IP protocol, but there are problems printing to it.

Initial Actions

- Perform OF 16-1 , Network Entry RAP before using this RAP.
- It is assumed that before entering here that the IOT is known to be OK.
- Ensure that the printer is properly configured for the TCP/IP Network. Verify with the system administrator that the following printer settings are correct:
  - Printer IP address
  - Subnet mask
  - Broadcast Address
  - Default Gateway
- For Solaris 2.5 and above, the key operator or system administrator must have root privilege to install the printer.
- For SunOs, have the system administrator ensure that the /etc/printcap file is properly configured.

Procedure

Determine if problem is occurring on multiple workstations. **Only one workstation is unable to print (answer no if unsure)**

Y N

Print out a configuration report. (GP 6). Review the TCP/IP settings. **TCP/IP is enabled.**

Y N

The printer is not installed for TCP/IP. Inform the customer/system administrator that the printer needs to be installed and setup for TCP/IP.

Select dC312. Check if TCP/IP is selectable. **TCP/IP is selectable (not grayed out).**

Y N

Switch off/on the machine power to reboot the SBC. When machine is ready, select (dC312) again. Check if TCP/IP is selectable. **TCP/IP is selectable (not grayed out).**

Y N

Go to GP 9 and perform the Regular AltBoot procedure.

Verify that the problem is corrected. If the problem continues, return to the start of this procedure.

Select dC312, select **TCP/IP** and select **Start**. Observe the test results. **The test passed.**

Y N

In Echo Test (dC312), select **Internal TCP/IP** and select **Start**.

Observe the test results. **The test passed.**

Y N

Perform the following:

- There may be a problem with the network port. Ask the system administrator to test the port.
- If the problem continues, have the customer/System administrator replace the network drop cable.
- If the problem continues, reseat the SBC System Memory and System Disk Cable.
- Go to GP 9 and perform the Regular AltBoot procedure.
- If the problem continues, replace the following ((PL 35.2) in order until the problem is resolved:
  - System Disk Cable
  - SBC System Memory
  - Hard Drive (PL 35.2)
  - SBC PWB
  - System Disk

Perform the following:

- There may be a problem with the network port. Ask the system administrator to test the port.
- If the problem continues, have the customer/System administrator replace the network drop cable.
- If the problem continues, reseat the SBC PWB Memory and System Disk Cable.
- If the problem continues, replace the following in order until the problem is resolved:
  - System Disk Cable
  - SBC PWB Memory
  - Hard Drive (PL 35.2)
  - SBC PWB
  - System Disk

The printer needs to be reinstalled on the network. Have the system administrator reinstall the printer.

- Ensure that all configurations and IP addresses are valid.

The problem occurs only on one job

Y N

Have the customer/system administrator Ping from the affected workstation to the IP address of the printer.

Observe results. **The workstation can ping the printer successfully.**

Y N

Have the customer/system administrator ping to another known good IP address, other than the broadcast address, on the network. **The workstation can successfully ping another IP address on the network.**

Y N

Inform the customer/system administrator there is a problem with the workstation.

Ensure the Subnet Mask, IP address, broadcast address and Default Gateway are set properly at the printer.

Have the system administrator check the workstation configuration. Ensure that the workstation is set-up properly to print to the printer according to the System Administrator Guide.

D

The same job prints ok from another workstation.

Y **N**

Have the customer/system administrator reload the print driver on the affected workstation. If the problem continues, escalate the call to the Customer Service Center (CSC).

There is an application problem. Have the customer contact the Customer Service Center.

OF 16-4 AppleTalk Checkout

Use this RAP if the printer is enabled for AppleTalk protocol, but there are problems printing to it.

Initial Actions

- Perform OF 16-1 , Network Entry RAP before using this RAP.
- It is assumed that before entering here that the IOT is known to be OK.

Procedure

Print out a configuration report (GP 6). **AppleTalk is enabled.**

Y **N**

The printer is not installed for AppleTalk. Inform the customer/system administrator that the printer needs to be installed and setup for AppleTalk.

Select dC312 and select **Start**.

Check if AppleTalk is selectable. **AppleTalk is selectable (not greyed out).**

Y **N**

Switch off/on the machine power to reboot the SBC. When machine is ready select dC312 and select **Start**. Check if AppleTalk is selectable. **AppleTalk is selectable (not greyed out).**

Y **N**

Have the system administrator reinstall the printer on the network. When complete, select dC312. Check if AppleTalk is selectable. **AppleTalk is selectable (not greyed out).**

Y **N**

Go to GP 9 and perform the Regular AltBoot procedure.

Verify that the problem is corrected. If the problem continues, return to the start of this procedure.

Verify that the problem is corrected. If the problem continues, return to the start of this procedure.

Select **AppleTalk** and select **Start**. Observe the test results. **The test passed.**

Y **N**

Perform the following:

- There may be a problem with the network port. Ask the system administrator to test the port.
- If the problem continues, have the customer/System administrator replace the network drop cable.
- If the problem continues, reseat the SBC System Memory and System Disk Cable.
- Go to GP 9 and perform the Regular AltBoot procedure.
- If the problem continues, replace the following ((PL 35.2) in order until the problem is resolved:
  - System Disk Cable
  - SBC System Memory
  - Hard Drive (PL 35.2)
  - SBC PWB

A

A

– System Disk

Check the network drop cable for obvious damage. If OK, there may be a network problem. Notify the system administrator.

Perform the following:

- There may be a problem with the network port. Ask the system administrator to test the port.
- If the problem continues, have the customer/System administrator replace the network drop cable.
- Recheck the AppleTalk configuration settings.
- Check the following AppleTalk configuration settings:
  - The Printer name is correct
  - Zone name is correct
  - The proper printer drivers are installed on the clients and that the printer is visible and selected in the chooser.

OF 16-5 NETBIOS Checkout

Use this RAP if the printer is enabled for NETBIOS protocol, but there are problems printing to it.

Initial Actions

- Perform OF 16-1 , before using this RAP.
- It is assumed that before entering here that the IOT is known to be OK.
- If running NETBIOS over an TCP/IP network, ensure that the printer is properly configured for TCP/IP network. Verify with the system administrator that the following printer settings are correct:
  - Host Name
  - Printer Name
  - Workgroup (domain)

Procedure

Print out a Configuration Report (GP 6). **NetBIOS is enabled.**

Y N

The printer is not installed for NetBios. Inform the customer/system administrator that the printer needs to be installed and setup for NetBIOS.

Select dC312. Check if NetBIOS is selectable. **NetBIOS is selectable (not grayed out).**

Y N

Switch off/on the machine power to reboot the SBC. When machine is ready, select dC312 again. Check if NetBIOS is selectable. **NetBIOS is selectable (not grayed out).**

Y N

Have the system administrator reinstall the printer on the network. When complete, select **Diagnostics** tab, **SBC/Network** tab, **Echo Test (dC312)**.

Check if NetBIOS is selectable. **NetBIOS is selectable (not grayed out).**

Y N

Go to GP 9 and perform the Regular AltBoot procedure.

Verify that the problem is corrected. If the problem continues, return to the start of this procedure.

Verify that the problem is corrected. If the problem continues, return to the start of this procedure.

Select **NetBIOS** and select **Start**. Observe the test results. **The test passed.**

Y N

Perform the following:

- There may be a problem with the network port. Ask the system administrator to test the port.
- If the problem continues, have the customer/System administrator replace the network drop cable.
- If the problem continues, reseat the SBC System Memory and System Disk Cable.
- Go to GP 9 and perform the Regular AltBoot procedure.
- If the problem continues, replace the following ((PL 35.2) in order until the problem is resolved:

A

A

- System Disk Cable
- SBC System Memory
- Hard Drive (PL 35.2)
- SBC PWB
- System Disk

Check the network drop cable for obvious damage. If OK, there may be a network problem. Notify the system administrator.
Perform the following:

- There may be a problem with the network port. Ask the system administrator to test the port.

Recheck the NetBIOS configuration settings.
Check fault History for 16.800.46, 16.802.46, or 16.803.46 fault codes. **The fault(s) occurred.**

Y N

Return to the top of this RAP and answer NO to statement that the interface is IP/Ethernet or IP/Token Ring.

Go to the OF 16-3, TCP/IP RAP.

OF 16-8 Problem Printing Job

Use this RAP when a particular job won't print. Other jobs print OK.

Procedure

Check the output to see if a PDL error sheet was printed. **An error sheet was printed.**

Y N

On the machine UI, select Job Status, Other Queues, All Completed Jobs, Save.
Check the queue for the job in question. **The job is in the log.**

Y N

Select Other Queues, All Incomplete Jobs, Save. **The job is stuck in the queue.**

Y N

Check for a fault listed against the job in question. **There is a fault(s) listed with the job.**

Y N

Go to GP 9 and perform the Regular AltBoot procedure.

Go to the appropriate RAP for the fault(s) listed with the job.

Switch the machine power off/on to reboot the SBC. **The job printed OK.**

Y N

Inform the customer the job must be deleted. Delete the job. Instruct the customer to recreate and re-send the job. **The job printed OK.**

Y N

Go to GP 9 and perform the Regular AltBoot procedure.
If the problem continues, there may be a problem with the job. See if other jobs print OK. If not, instruct the customer/System administrator to reload the print driver on the affected workstation.
If the problem continues have the customer call the Customer Service Center.

Done. Return to Service Call Procedures.

Done. Return to Service Call Procedures.

The job must have been printed. Check for the possibility that the job was removed from the printer by another user.

Go to GP 9 and perform the Regular AltBoot procedure.
If the problem continues, there may be a problem with the job. See if other jobs print OK. If not, instruct the customer/System administrator to reload the print driver on the affected workstation.
If the problem continues have the customer call the Customer Service Center.

OF 16-9 Job Prints Incorrectly

The job prints, but incorrectly.

Procedure

Discuss the problem with the customer and/or inspect the incorrect output. **There is a font problem.**

Y N

The problem is occurring on all jobs from all clients.

Y N

The problem is occurring on jobs from one particular client.

Y N

The problem is related to a particular job. Have the customer call the Customer Support Center.

There may be a problem with the client workstation. Check/perform the following:

- See if problem is related to a particular job. If so, go to the OF 16-8 .
- Ensure that the client meets minimum specifications for the Centreware® software drivers.
- Ensure the latest printer drivers are loaded.
- Have the customer/System administrator reload the printer driver.

Have the customer/system administrator replace the print drivers. Ensure that the latest drivers available are loaded. **The problem still continues.**

Y N

Return to Service Call Procedures.

Go to GP 9 and perform the Regular AltBoot procedure.

Have the customer view the job in Print Preview of the application. **The problem appears in Print Preview.**

Y N

There may be a font substitution that is not acceptable to the customer. In the Printer Setup for the print driver, if Always Send to Printer is selected, the actual fonts will be sent to the printer from the workstation. This will slow down the printer performance, but will usually solve the font problem.

There may be a problem with the client workstation. Check/perform the following:

- See if problem is related to a particular job. If so, go to the OF 16-8 .
- Ensure that the client meets minimum specifications for the Centreware® software drivers.
- Ensure the latest printer drivers are loaded.
- Have the customer/System administrator reload the printer driver.

OF 17-1 FAX Entry

There is a problem with Embedded FAX. The primary causes of Fax problems, **in order of likelihood**, are:

- Phone line problems
- Customer operation problems
- PBX setup problems
- Machine configuration problems
- Fax hardware problems

Initial Actions

- Verify the physical presence of the FAX PWB and that is firmly plugged into the FAX Riser PWB.
- Check the Configuration Sheet to confirm that the FAX PWB is detected.
- If the problem is FAX not printing the Date and Time stamp, enter dC131 and change the setting in NVM location 200-143 from a 0 to a 1.
- Perform GP 1 FAX PWB Internal Selftest.
- Check the phone line connection (GP 14).
- If the FAX icon is not present, check cable (PL 35.2) item 8 on the SBC.

Procedure

NOTE: *Embedded Fax is designed to work over analog lines only. PBX and DSL lines attempt to emulate a PSTN analog line, and must be configured appropriately. Incorrect PBX settings are a major cause of service calls.*

The following line types are supported on a best efforts only basis:

- *xDSL lines with appropriate filtering.*
- *PBX extensions using digital signalling, with an analog speech path.*
- *ISDN lines are not supported.*
- *In a VoIP environment, Embedded Fax devices need separate analog lines or a T.38 Protocol Adapter*

The Fax cannot send or receive.

Y N

The Fax can send but not receive.

Y N

If the Fax receives but does not send, check the FAX set-up menus:

- Enter **Tools** (GP 2). Select **Service Setting**s.
- Select **Fax Service Settings**.
- Select **Line __ Setup**
  - Check that the Fax is set for **Send and Receive**.

If the Fax transmits but cannot receive,

- Check the phone number. To receive a FAX the sender must know the phone number assigned to the phone line connected to the FAX.
- Check the FAX set-up menus.
  - Enter **Tools** (GP 2). Select **Service Setting**s.
  - Select **Fax Service Settings**.

A

A

– Select **Line __ Setup**.

Check that the Fax is set for **Send and Receive**.

Print a Configuration Report (GP 6). **The Fax is listed as installed.**

Y N

Switch off the Power.

Disconnect then reconnect the Fax PWB, and Riser PWB. Switch on the power. If the problem remains, perform the following:

Replace the Fax PWB (PL 35.1).

Reload SW (GP 9).

Replace Hard Drive (PL 35.2).

Replace the SBC PWB (PL 35.2).

Check the FAX set-up menus.

- Enter **Tools** (GP 2). Select **Service Settings**.
- Select **Fax Service Settings**.
- Select **Fax Setup**.
  - Check that the Fax is enabled.
  - If the **Enable** and **Disable** buttons are not present, then the initial setup at install was not completed correctly. Press **Setup** and complete the setup.
- Line Configuration - be sure pulse or tone selection is correct.
- FAX Transmission Defaults (check closely for FAX transmission problems)
  - Automatic Redial Setups
  - Automatic Resend
  - Audio Line Monitor
  - Transmission Header Text
  - Batch Send
- Receive Defaults (check closely for FAX receive problems)
  - Receive Printing Mode
  - Default Output Options
  - Secure Receive
  - Auto Answer Delay
- FAX Country Setting
- File Management

NOTE: *Though typically the FAX feature is setup for analog transmission, if FoIP is being used, the following may be helpful if there is a problem.*

If the machine fails to receive or transmit fax jobs and the transmit speed drops immediately to 9600 bps or 7200 bps, then do the following:

The transmitting or receiving baud rate can be reduced from 33.6K bps to either 14.k bps, 9600 bps, or 7200 bps by changing the proper NVM locations.

The NVM values are:
3 = 33.6K 11= 14.4K 13 = 9600 14 = 7200

The NVMs are:
Sending NVM 200-087 “T30MaxSpeedL1Tx” (single line)
Sending NVM 200-088 “T30MaxSpeedL2Tx” (for 2 line fax)
Receive NVM 200-089 “T30MaxSpeedL1Rx” (single line)
Receive NVM 200-090 “T30MaxSpeedL2Rx” (for 2 line fax)

Otherwise, replace the FAX PWB (PL 35.1).

OF 99-1 Reflective Sensor

Sensors consist of a light-emitting diode and a photo transistor. When energized, the light from the LED causes the photo transistor to conduct, drawing current through a pull-up resistor. The voltage drop across the resistor causes the input signal to the control logic to change from a high to a low.

Reflective sensors operate by light from the LED being reflected off the paper to the photo transistor, causing the output of the sensor to go to the low (L) state.

Initial Actions

Ensure that the sensor is not actuated.

Procedure

Enter the component control code indicated in the Procedure and/or Circuit Diagram of the RAP that sent you here. Actuate the sensor using a sheet of paper. **The display changes with each actuation.**

Y N

Clean the sensor and then block and unblock it. **The display changes with each actuation.**

Y N

Access to some sensors in this machine is difficult. Follow the **Y** leg if you can access the sensor connector. Follow the **N** leg if access is not possible. **The sensor connector is accessible.**

Y N

Check the voltage at the output of the PWB or power supply (refer to the Circuit Diagram). In the example for this generic procedure, voltage is provided from J533 on the I/F (MDD) PWB. Check for pull-up voltage for the output signal. This voltage will be either +5 VDC or +3.3 VDC depending on the circuit (refer to the Circuit Diagram for the correct voltage). **The voltage corresponds with the voltage shown in the Circuit Diagram.**

Y N

Check for short circuit(s) that may be loading down the line. Check the power input to the PWB(s). If this does not resolve the problem, replace the PWB.

Refer to the Circuit Diagram. Check the wires from the PWB to the sensor for opens, shorts, or loose contacts. If the wires are OK, replace the sensor. If this does not resolve the problem, replace the PWB

The display indicates a constant L.

Y N

Check for +5VDC to the sensor (typically pins 1 and 3 on a 3 pin connector). +5 VDC is present.

Y N

Use the circuit diagram and/or the wirenets in Section 7 to trace the problem.

Disconnect the sensor. Use a jumper wire to connect the output wire from the sensor (typically pin 2 on a 3 pin connector) to DC COM or GND. **The display changes from H to L.**

A B C

Y N

There is either an open circuit or a failed PWB. Use the Circuit Diagram to trace the output wire to the PWB. If the wire is OK, replace the PWB.

Replace the sensor.

Disconnect the sensor. **The display indicates H.**

Y N

When sensors are unplugged, the input at the PWB should always be high if there is no harness short or PWB failure. Check the output wire from the sensor (typically pin 2 on a 3 pin connector) to the PWB for a short circuit. If the wire is good, replace the PWB. Figure 1 represents a typical sensor for this machine.

The sensor is shorted. Replace the sensor.

Look for unusual sources of contamination.

The sensor and the circuit appear to operate normally. Check the adjustment of the sensor. Clean the sensor. Check for intermittent connections, shorted, or open wires. If the problem continues, replace the sensor.

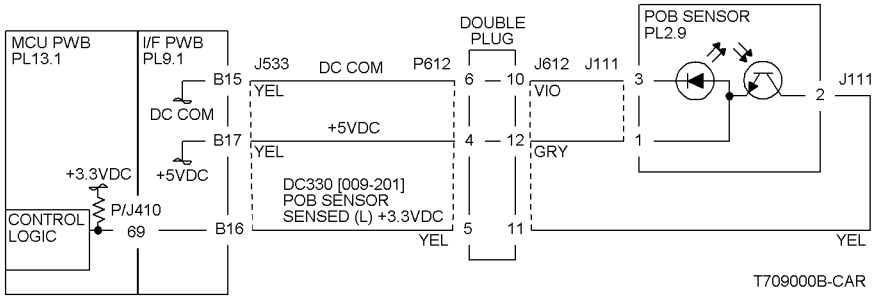

Figure 1 Typical Reflective Sensor Circuit Diagram

OF 99-2 Transmissive Sensor

Sensors consist of a light-emitting diode and a photo transistor. When energized, the light from the LED causes the photo transistor to conduct, drawing current through a pull-up resistor. The voltage drop across the resistor causes the input signal to the control logic to change from a high to a low.

Transmissive sensors have a flag or actuator that is pushed into the space between the LED and transistor, blocking the light beam and causing the output of the sensor to go to the high (H) state. This actuation may be caused by a sheet of paper striking a pivoting flag, or a rotating actuator on a shaft or roll.

Some sensors have built-in inverters and the outputs will go to the low (L) state when the sensors are blocked. In other situations, the processing of the signal in control logic may cause the logic level displayed on the UI or the PWS to be the opposite of the actual voltage output by the sensor. The specific RAP and/or Circuit Diagram will indicate if this is the case. Figure 1 is an example of a typical sensor circuit for this machine

Procedure

Enter the component control code indicated in the specific RAP and/or Circuit Diagram. Block and unblock the sensor. **The display changes with each actuation.**

Y N

Clean the sensor and then block and unblock it. **The display changes with each actuation.**

Y N

Access to some sensors in this machine is difficult. Follow the **Y** leg if you can access the sensor connector. Follow the **N** leg if access is not possible. **The sensor connector is accessible.**

Y N

Check for +5VDC at the output of the PWB or power supply. Refer to the Circuit Diagram. In the example for this generic procedure, voltage is provided from J533 on the I/F (MDD) PWB. Check for pull-up voltage for the output signal. This voltage will be either +5 VDC or +3.3 VDC, depending on the circuit. Refer to the circuit diagram for the correct voltage.

Y N

Check for short circuit(s) that may be loading down the line. Check the power input to the PWB(s). If this does not resolve the problem, replace the PWB.

Refer to the Circuit Diagram. Check the wires from the PWB to the sensor for opens, shorts, or loose contacts. If the wires are OK, replace the sensor. If this does not resolve the problem, replace the PWB

The display indicates a constant L

Y N

Check for +5VDC to the sensor (typically pins 1 and 3 on a 3 pin connector). +5 VDC is present.

Y N

Use the circuit diagram and /or the wirenets in Section 7 to trace the problem.

A B C D

Disconnect the sensor. Use a jumper wire to connect the output wire from the sensor (typically pin 2 on a 3 pin connector) to DC COM or GND. **The display changes from H to L.**

Y N

There is either an open circuit or a failed PWB. Use the Circuit Diagram to trace the output wire to the PWB. If the wire is OK, replace the PWB.

Replace the sensor.

Disconnect the sensor. **The display indicates H.**

Y N

When sensors are unplugged, the input at the PWB should always be high if there is no harness short or PWB failure. Check the output wire from the sensor (typically pin 2 on a 3 pin connector) to the PWB for a short circuit. If the wire is good, replace the PWB. Figure 1 represents a typical sensor for this machine

The sensor is shorted. Replace the sensor.

Look for unusual sources of contamination.

The sensor and the circuit appear to operate normally. Check the adjustment of the sensor. Clean the sensor. Check the sensor actuator/flag for proper operation. Check for intermittent connections, shorted, or open wires. If the problem continues, replace the sensor.

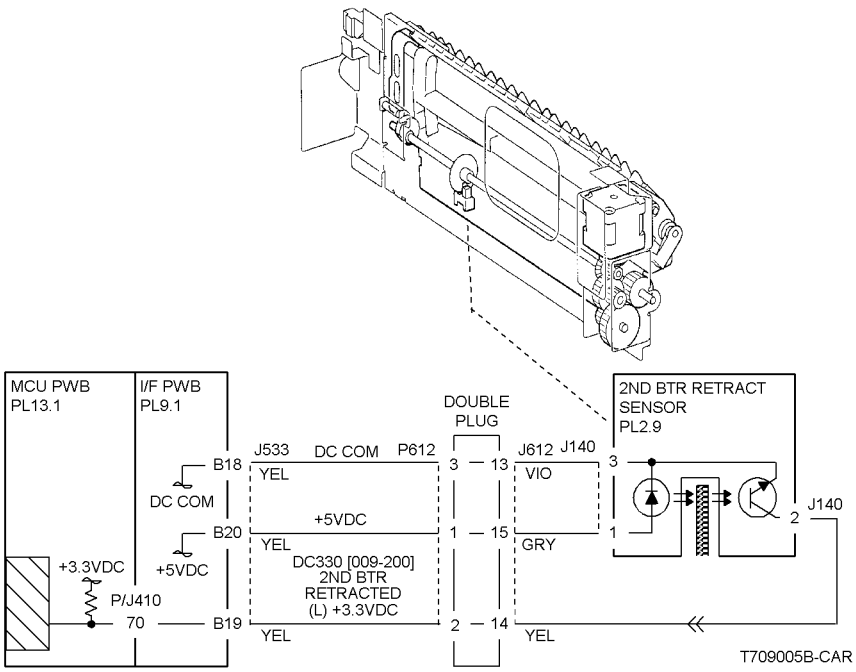

Figure 1 Typical Transmissive Sensor Circuit Diagram

OF 99-3 Switch

Procedure

Enter dC330 [XXX-XXX]. Actuate the switch. **The display changed.**

Y **N**

There is +3.5 / 5VDC measured between Pin 2(+) of the Switch and GND(-).

Y **N**

Check the wire between the switch Pin 2 and the PWB Pin 3 for an open circuit and poor contact. If the check is OK, replace the PWB.

There is +3.5 / 5VDC measured between Pin 1(+) of the Switch and GND(-).

Y **N**

Replace the switch.

Check the wire between the PWB Pin 4 and the switch Pin 1 for an open circuit and poor contact. If the check is OK, replace the PWB.

De-actuate the switch. **The display changed.**

Y **N**

Disconnect the connector on the switch. **The display changed.**

Y **N**

Check for a short between the switch Pin 2 and the PWB Pin 3. If the check is OK, replace the PWB.

Replace the switch.

Replace the switch.

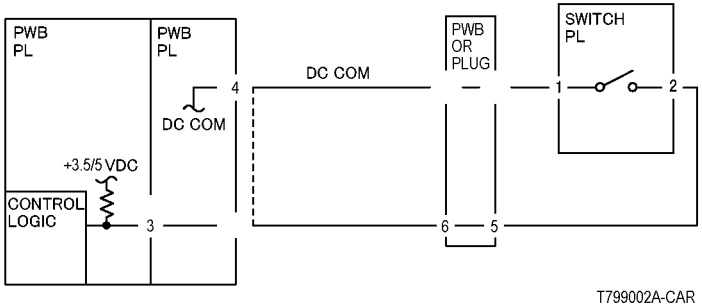

Figure 1 2003

OF 99-4 Generic Solenoid/Clutch

Solenoids and electric clutches are essentially electromagnets. Typically, a positive voltage is applied to one end of a coil, and a current driver is connected to the other end. Control Logic switches this driver to GND potential, actuating the magnet. Bi-directional solenoids have a bipolar driver connected to each end. One leg is switched to 24 VDC and the other to GND.

Figure 1 is a circuit diagram of a typical solenoid.

Initial Actions

Ensure that there is no damage or binding in the solenoid or in any mechanical linkage. If there is an Adjustment for the clutch or solenoid, make sure that the procedure was performed correctly

Procedure

The clutch/solenoid is always energized.

Y **N**

Enter the component control code (dC330) given in the RAP or the Circuit Diagram. Press the **Start** button **The Clutch or solenoid energizes.**

Y **N**

Press the **Stop** button **There is +24 VDC between the switched leg (J407 pin A6 in the example, Figure 1) of the control PWB and GND.**

Y **N**

There is +24 VDC between the powered leg (J407 pin A7 in the example, Figure 1) of the control PWB and GND.

Y **N**

Disconnect the connector (J407 in the example, Figure 1). **There is +24 VDC between the powered leg of the control PWB and GND.**

Y **N**

Refer to the 24 VDC wirenets. check the input power to the control PWB. **+24 VDC is present.**

Y **N**

Use the 24 VDC wirenets to troubleshoot the problem.

Replace the control PWB.

Check the wire in the powered leg of the circuit, (J407 pin A7 in the example, Figure 1) for a short circuit to GND. If the wire is OK, replace the clutch or solenoid.

Disconnect the connector (J407 in the example, Figure 1). Check continuity through the two wires and the clutch or solenoid. **There is less than 100 ohms between the two legs of the circuit.**

Y **N**

Disconnect the clutch or solenoid. Check continuity through the two wires and the clutch or solenoid. **There is less than 100 ohms across the clutch or solenoid.**

Y **N**

Replace the clutch or solenoid.

A B C D E

A B C D E

One of the two wires between the control PWB and the clutch or solenoid is open. Repair or replace the wiring as required.

Replace the control PWB.

Press the **Start** button. **There is less than 1 VDC between the switched leg of the control PWB and GND.**

Y N

Replace the PWB.

Replace the clutch or solenoid.

The clutch or solenoid appears to be functioning correctly. Refer to the Circuit Diagram for the RAP that sent you here. Check the wires for loose connections or damage that may cause intermittent operation. Perform any required adjustments.

There is a short circuit on the switched leg (J407 pin A6 in the example) from the solenoid or clutch. Check the wire for a short circuit to GND. If the wire is OK, replace the solenoid. If the problem persists, replace the controlling PWB.

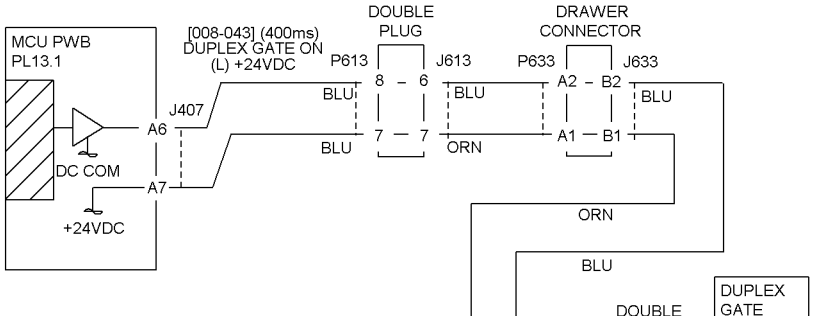

Figure 1 Typical Solenoid/Clutch Circuit Diagram

OF 99-6 2 Wire Motor Open

Procedure

NOTE: *Before performing this RAP, ensure that the motor is free to rotate.*

Enter the dC330 [XXX-XXX].

There is +24VDC measured between Pin 3(+) of the PWB and GND(-).

Y N

There is +24VDC measured between the Motor Pin 2(+) of the Motor and GND(-).

Y N

There is +24VDC measured between the Motor Pin 1(+) of the Motor and GND(-).

Y N

There is +24VDC measured between the PWB Pin 4(+) of the PWB and GND(-).

Y N

Replace the PWB.

Check the wire between the PWB Pin 4 and the Motor Pin 1 for an open circuit or poor contact.

Replace the motor.

Check the wire between the PWB Pin 3 and the Motor Pin 2 for an open circuit or poor contact.

Replace the PWB.

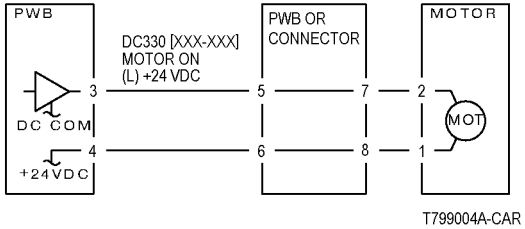

Figure 1 Motor CD

OF 99-7 2 Wire Motor On

Procedure

Turn off the power. Remove the PWB connector. **There is 10 Ohm's or less measured between the connector Pin 3 and the frame.**

Y N

Replace the PWB.

Check the wire between the connector Pin 3 and the motor Pin 2 for a short circuit.
If the check is OK, replace the motor.

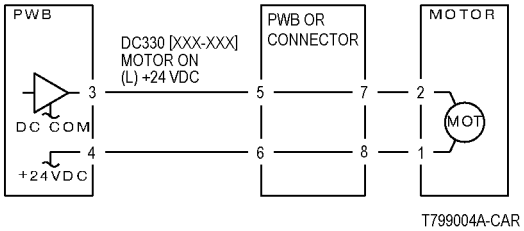

Figure 1 Motor CD

OF 99-8 Set Gate Solenoid Open

Procedure

There is +24VDC measured between the Nip/Release Solenoid Pin 1 (+) and GND (-).

Y N

There is +24VDC measured between the PWB Pin 5 (+) and GND(-).

Y N

Check +24VDC inputs on the PWB. If the check is OK, replace the PWB.

Check the wire between the PWB Pin 5 and the Nip/Release Solenoid Pin 1 for an open circuit or poor contact.

Enter dC330 [XXX-XXX]. **There is +24VDC measured between the PWB Pin 4 (+) and GND(-).**

Y N

There is +24VDC measured between the Nip/Release Solenoid Pin 3 (+) and GND (-).

Y N

Replace the Nip/Release Solenoid.

Check the wire between the PWB Pin 4 and the Nip/Release Solenoid Pin 3 for an open circuit and poor contact.

Follow the following when the release caused a problem.
Go to the dC330 [XXX-XXX]. **There is +24VDC measured between the PWB Pin 6 (+) and GND(-).**

Y N

There is +24VDC measured between the Nip/Release Solenoid Pin 2 (+) and GND (-)

Y N

Replace the Nip/Release Solenoid.

Check the wire between the PWB Pin 6 and the Nip/Release Solenoid Pin 2 for an open circuit or poor contact.

Replace the PWB.

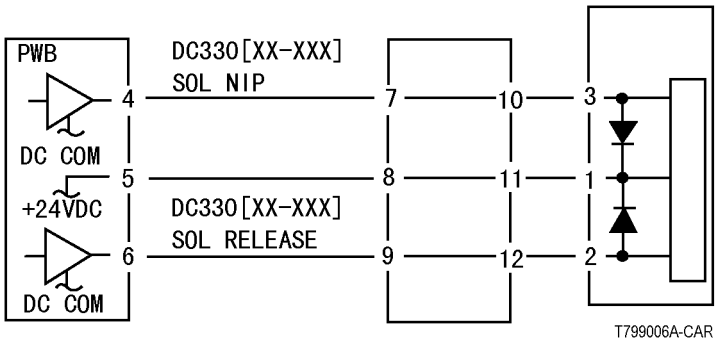

Figure 1 Nip Solenoid CD

OF 99-9 Multiple Wire Motor

For use on DC motors that:

- have 1 or 2 DC power inputs
- are controlled by 2 or more drivers
- have no DC COM connections for return power
- have no specific feedback circuits

Procedure

Connect black meter lead to ground. Measure voltage at each pin of J2 (example only, refer to the actual Circuit Diagram for the correct voltage and connector designation). **+24 VDC is measured at each pin.**

Y N

Disconnect J2. Measure voltage at P2-1 and P2-6. **+24 VDC is measured.**

Y N

Switch machine off then on. Measure voltage at P2-1 and P2-6. **+24 VDC is measured.**

Y N

If an interlock circuit is present, check the interlock circuit. Repair as required. If the interlock circuit is good, replace the PWB.

Check the motor wires for a short circuit. If the wires are good, replace the Motor.

Check the motor wires for obvious damage. If the wires are good, replace the Motor.

Replace the PWB.

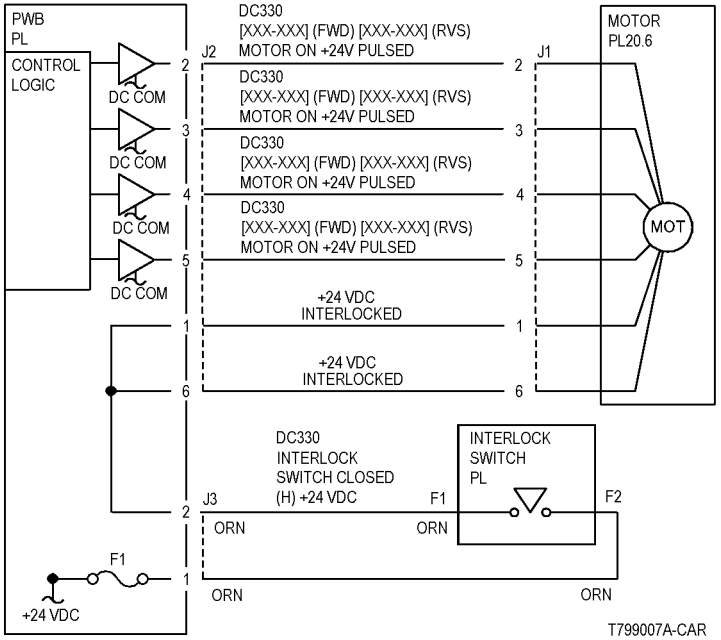

Figure 1 Motor CD

3 Image Quality

Image Quality RAPs

Image Quality Entry 3-3
IQ 1 White Streaks/White Band (Dirt, Scratches) in SS Direction 3-6
IQ 2 Charging Roll Pitch White Streaks-1 3-6
IQ 3 Charging Roll Pitch White Streaks-2 3-7
IQ 4 Photoreceptor Pitch Color Streaks 3-8
IQ 5 Background on Coated Paper 3-8
IQ 6 Toner Droplet Contamination - TBD 3-9
IQ 7 Smear 3-9
IQ 8 Rough Black 3-10
IQ 9 Damp Paper Transfer Failure 3-10
IQ 10 Toner Contamination at Lead/Trail Edge - TBD - see issues in RAP 3-11
IQ 11 Multicolor Transfer Failure 3-12
IQ 12 Trail Edge Transfer Failure 3-12
IQ 13 Micro White Spots (Side 2) 3-13
IQ 14 Color Streaks 3-13
IQ 15 Wetting 3-14
IQ 16 Fuser Wrinkles 3-14
IQ 17 Streaks on Coated Paper due to Rubbing (EXIT) 3-15
IQ 18 Caterpillar Mark (Transfer) 3-15
IQ 19 Background (IPS) - TBD - This is from Charger. Screens and process listed different for Jav. 3-16
IQ 19 Background on Gloss RAP Ref - TBD Nwd RAP for ref only 3-17
IQ 20 Light Ink Support (IPS) - TBD 3-18
IQ 21 Highlight Density Reproduction (NVM Darken +3) (IPS) - TBD 3-18
IQ 22 Highlight Density Reproduction (NVM Lighten +3) (IPS) - TBD 3-19
IQ 23 Bleed on Tracing Paper (IPS) - TBD 3-20
IQ 25 CVT Streaks (IPS) 3-20
IQ 26 Copy: Gradation Jump in Text & Photo (IPS) - TBD 3-21
IQ 27 Scan: Smeared Text, JPEG Mosquito Noise (IPS) 3-21
IQ 28 Moire In Text Mode (Fine) BW Scan/Fax For 133 lpi Originals (IPS) 3-22
IQ 29 Copy: Bleed on 2 Sided Document (IPS) - TBD 3-22
IQ 30 Copy: Platen Background (IPS) - TBD 3-23
IQ 31 White Streaks due to Clogged Trimmer (Developer) - TBD 3-23
IQ 32 Heat Haze/Mock-Heat Haze - TBD 3-24
IQ 32 Heat Haze/Pseudo-Heat Haze - TBD Original Charger RAP for Reference only . 3-26
IQ-20 Heat Haze/Mock Heat Haze - TBD - Rookie 2 RAP for Refererence Only 3-27
IQ51 Heat Haze/Mock Heat Haze - TBD - Northwood RAP for Refererence Only 3-30
IQ 33 Bleeding/Blurred Image on Heavyweight Paper 3-32
IQ 34 Kiss Mark 3-32
IQ 35 Semicircle Seal 3-33
IQ 36 Reverse Cracks 3-33
IQ 37 Ghosting 3-34
IQ 38 Cracks 3-34
IQ 39 1.9mm Banding 3-35
IQ 40 Paper Wrinkles due to Interaction 3-36
IQ 41 Low Image Density - TBD 3-39
IQ 42 Repeating Bands, Streaks, Spots, and Smears 3-39
Image Quality Specifications 3-41
Restrictions and Notes on Image Quality 3-44

Image Quality Entry

The purpose of this RAP is to serve as the entrance vehicle into the Image Quality RAPs section. All Image Quality RAPs must be accessed through this RAP.

The RAP will have you evaluate the copies made during the procedure for image quality defects. It will refer you to the Image Quality Analysis RAPs and the Image Quality Defect section in order to diagnose and repair any image quality problems.

Initial Actions

Ask the customer SA to perform the Calibration adjustment listed in the System Administrator Guide, or peform GP 5 Image Quality Calibration if any of the following problems are reported for both copy and print:

- Incorrect colors
- Poor gray balance
- Colors have shifted over time
- Color densities too high or low

NOTE: *Calibration is a color adjustment for copy and print modes. It is listed under the Tools tab in the Machine Status window. It compensates for differences between the actual and the expected (target) toner densities for each color, and should be performed whenever there is a noticeable change in the appearance (quality) of the output, particularly changes in color tones or densities. Performing the procedure on a regular basis will help to maintain consistent color quality over time. Since it can affect all jobs for all users, it is recommended that this procedure be performed only by the Machine Administrator.*

If the customer is dissatisfied with machine output image quality, check machine customer selectable image quality settings on the UI and the Print Driver. Determine if adjustments to these settings should be made to tune image output to meet customer IQ requirements.

Refer the customer to user documentation to review the following image quality settings:

- Original Type
- Sharpness / saturation
- Image Quality Presets
- Auto Exposure
- Color Shift
- Light / Dark / Contrast
- Color Balance

Use the following Customer Mode Settings as a baseline to evaluate Image Quality:

- Output Color - Full Color
- Original Type - Text & Photo / Halftone
- Lighten/Darken - Normal
- Color Balance - 0
- Color Saturation - Normal
- Sharpness - Normal

Ensure that the correct image quality settings are selected for the paper type that the customer is using. Different image quality settings can be selected for Bond Paper, Plain Paper, Recycled Paper, and Custom Paper 1 to 5. Setting the correct image quality setting will produce the best quality of the output.

Continue with the procedure if the problem remains.

Procedure

Use prints from one or more of the following sources to check for the presence of defects.

- Customer prints that show the presence of the defect
- Prints that were made to check Calibration
- Use dC612 to make some test pattern prints. At a minimum, make a four color grid pattern print and several half tone prints of different densities.
- Use GP 5 to make some prints. If you use GP 5, select Cancel at the end of the procedure so that machine calibration will not be changed.

Check for the presence of the defect in Copy mode and in Print mode. Go to Table 1. Examine the output for any of the listed defects. Perform the corrective action that is listed.

Table 1 Image Quality Problems

Image Quality Problem	Subsection	Symptoms	RAP
White Streaks/White Band (dirt, damage) in SS direction	ROS	approx. 1mm wide	IQ 1
Charging Roll Pitch White Streaks-1	XERO	If BCR is deformed at the BCR-to-Photoreceptor NIP area (Nip Pressure is larger than that on San Remo), the trace may appear as thin white streaks in the FS direction on the highlight area at intervals of Charging Roll Pitch.	IQ 2
Charging Roll Pitch White Streaks-2	XERO	If any elements contained in Cleaner-Roll attach to the BCR surface at the BCR-to-Cleaner-Roll Nip area, the resistance on BCR may lower, causing white streaks to appear in the FS direction.	IQ 3
Photoreceptor Pitch Color Streaks	XERO/Cleaner	Vibrations during transportation of Drum Cartridge cause BCR or Blade to rub against Photoreceptor, thereby causing electrostatic memory to be left on the Photoreceptor. This may cause thin color streaks to appear in the FS direction on the highlight area at intervals of Photoreceptor Pitch.	IQ 4
Background on Coated Paper	Developer	Background is more visible on coated paper than on plain paper.	IQ 5
Toner Droplet Contamination	Developer	Random spatters of a-few-mm-sized toner	IQ 6

Table 1 Image Quality Problems

Image Quality Problem	Subsection	Symptoms	RAP
Smear on Heavyweight Paper	Transfer	When the lead edge of paper enters the 2nd transfer, the 2nd-transfer area has a momentarily increasing load, causing a change in the speed of IBT Drive Roll (speed reduction). This speed change changes the relative speed difference between the Drum surface and the IBT Belt surface at the 1st-transfer area for K color, sometimes causing a smear (toner disturbance) to occur.	IQ 7
Rough Black	Transfer	On unlevel or poorly formed paper, toner is not transferred to concaves and convexes there, causing a rough transfer.	IQ 8
Damp Paper Transfer Failure	Transfer	When paper is damp, it reduces its resistance. On the other hand, K color including carbon has a larger dielectric loss, so it requires a different electric field from the other colors. Therefore, the difference between paper resistance and toner resistance causes a larger difference between the electric field that multicolor transfer requires and the one that K-color transfer requires. This results in no latitude.	IQ 9
Toner Contamination at Lead/Trail Edge	Transfer	Lead Edge: The lead edge of paper contacts the belt when it is transported from REGI to Transfer. Trail Edge: When paper that looped between Transfer and Fusing is released from the 2nd-transfer nip, its trail edge moves in the reverse direction to the feed direction thereby contacting the surface of 2nd BTR, or jumps up thereby contacting the belt, thus causing toner contamination.	IQ 10
Multicolor Transfer Failure	Transfer	An increase in the electric resistance of paper due to a reduced moisture content after Side 1 fusing, or an increase in the resistance of the 2nd-transfer area due to low humidity and aging may make it impossible to obtain the necessary electric field for an operation, especially the 1st one of the day, in low-humidity environment. This is because the setting aims to control MWS within the limit.	IQ 11
Trail Edge Transfer Failure	Transfer	After the trail edge of paper is released from the 2nd-transfer nip, due to an effect of strokes for fusing, it jumps up and is retransferred to Intermediate Transfer Belt.	IQ 12
MWS (Side2) (Micro White Spots)	Transfer	When the resistance of the 2nd-transfer area is high, e.g., at the 1st operation of the day in low-humidity environment, the transfer latitude between the multicolor area and the one-color area is narrow and the set voltage is in favor of multicolor transfer. Therefore, the voltage is a little excessive for one-color transfer, causing the transfer-nip discharge phenomenon. This may cause micro white spots to occur.	IQ 13
Color Streaks	Transfer	Paper dust may be caught between Intermediate Transfer Belt and Cleaner Blade, causing poor cleaning.	IQ 14
Wetting	Fuser	As to an overall half-tone image, image distortion (toner disturbance) may occur on either side of the trail edge or on both edges.	IQ 15
Damp Paper Wrinkles	Fuser	When long-grain paper includes moisture, it becomes wavy on the lead and short edge. If the paper enters the Fuser Nip area in this condition, it cannot be handled well and wrinkles.	IQ 16
Streaks on Coated Paper due to rubbing	Exit	At output of heavy coated paper to Exit 1 in Duplex Mode under the high-temperature/high-humidity environment, Side 1 may rub against the Exit Gate, thus exhibiting streaks.	IQ 17
Caterpillar Mark	Transfer	After being stripped in the 2nd-transfer area, paper rubs against DTS HSG, etc. thereby letting particles of toner unfused on itself scatter. This results in deletions of a caterpillar pattern.	IQ 18
Background	IPS	The default background suppression function is unable to fully remove the background.	IQ 19
Light Ink Support	IPS	This is used to copy an image to be lighter than the current BW Copy settings; e.g. when using light ink.	IQ 20
Highlight Density Reproduction (NVM Darken +3)	IPS	This is used to reproduce the highlight (light colors) in darker shade.	IQ 21
Highlight Density Reproduction (NVM Lighten +3)	IPS	This is used to reproduce the density in lighter shade.	IQ 22
Bleed on Tracing Paper	IPS	When copying or scanning Tracing Paper document, bleed or background occur around the texts.	IQ 23
CVT Streaks	IPS	Dirt such as paper dust is generated at the DADF scan position. The streaks in the SS direction are created when that contamination is scanned.	IQ 25
Copy: Gradation Jump in Text & Photo	IPS	In the BW and Text & Photo Copy mode, gradation jump occurs on 100-line photo documents.	IQ 26
Scan: JPEG Mosquito Noise	IPS	Color texts are blurred and mosquito noise is generated around the texts due to JPEG compression.	IQ 27
Moire In Text Mode (Fine) BW Scan/Fax For 133 lpi Originals	IPS	When a document with tint on the whole paper or a background image is scanned using Fax Text mode in High Quality (Fine), the file size or the Fax transmission time may increase drastically.	IQ 28

Table 1 Image Quality Problems

Image Quality Problem	Subsection	Symptoms	RAP
Copy: Bleed on 2 Sided Document	IPS	Bleed occurs in the Copy BW and Text mode.	IQ 29
Copy: Platen Background	IPS	When A4 stark white paper such as J Paper/Premier 80 is scanned into A3 when in Copy BW Text mode and AE is ON, the platen back density is reproduced outside of the copy range.	IQ 30
White Streaks due to Clogged Trimmer	Developer	See IQ 31.	IQ 31
Heat Haze/Like Heat Haze	Transfer	See IQ 32.	IQ 32
Toner Bleeding/Blurred Image on Heavy-weight Paper	Transfer	When the trail edge of paper exits Regi Chute, the paper jumps up and comes close to Intermediate Transfer Belt. The discharge phenomenon at the 2nd-transfer pre-nip area causes part of the image area, 23mm from the trail edge, along the shaft to be blurred (toner scatter).	IQ 33
Kiss Mark	Transfer	The system resistance in the 1st-transfer area increases, causing the voltage applied for 1st transfer to increase. As a result, a charge is injected into toner on Photoreceptor, thus causing a kiss-mark-shaped discharge mark to appear.	IQ 34
Semicircle Seal	Transfer	A phenomenon that when paper is stripped in the 2nd-transfer area, toner particles unfused on the paper scatter in a semi-arc.	IQ 35
Reverse Cracks	Transfer	A phenomenon that some partially dark streaks appear in the FS direction on part of the K-colored solid patch.	IQ 36
Ghost	XERO	In DC Charge the capacity of charging is less than that in AC Charge, so a ghost problem may be worse depending on the environment, paper, etc.	IQ 37
Cracks	XERO	A phenomenon unique to DC charge by BCR.	IQ 38
1.9mm Banding	Developer	A lighter/darker area appears at cycles of 1.9mm.	IQ 39
Paper Wrinkles due to Interaction	Fuser	The positional relation of a roll at each sublevel with Fuser is inappropriate, causing paper to skew. As a result, paper wrinkles at Fuser.	IQ 40
Low Image Density		A condition that results when too little toner of a single color or combination of colors is developed on the copy or print. This results in lighter copies or prints for the single-color toner or the color that results from the combination of color toners.	IQ 41
Repeating Bands, Streaks or Smears		defects appear at regular intervals that can be traced to a particular component or function	IQ 42

IQ 1 White Streaks/White Band (Dirt, Scratches) in SS Direction

approx. 1mm wide

Figure 1 White Streaks

This is caused by dirt or scratches.

Procedure

1. Clean the top surface of the ROS Window.

NOTE: *It is necessary to separate this problem from Clogged Developer Trimmer. Do not replace the ROS Unit without consideration. Check IQ 31 to ensure that the problem is NOT "White Streaks due to clogged Developer Trimmer."*

2. Replace the ROS Unit (PL 2.1).

NOTE: *Cin50% and Cin30% half tones can be output with dC612, test pattern 9.*

IQ 2 Charging Roll Pitch White Streaks-1

If BCR is deformed at the BCR-to-Photoreceptor NIP area, the trace may appear as thin white streaks in the FS direction on the highlight area at intervals of Charging Roll Pitch.

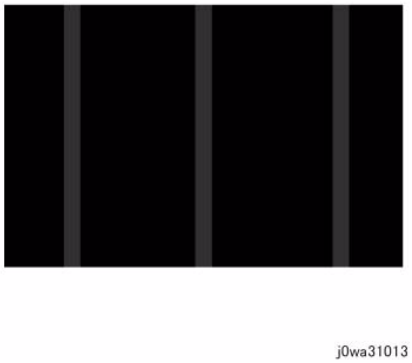

Figure 1 Charging Roll Pitch White Streaks

This problem may occur with a New Drum Cartridge that has been stored for a long period, or in a machine that has had a long rest in a high-temperature environment. (Halftone Image)

Procedure

1. On a halftone image, check that streaks appear in the FS direction at 38mm-pitch intervals.
2. Make approx. 10 to 30 prints.
3. Check that no streaks appear.

IQ 3 Charging Roll Pitch White Streaks-2

If any elements contained in the Cleaner-Roll attach to the BCR surface at the BCR-to-Cleaner-Roll Nip area, the resistance on the BCR may lower, causing white streaks to appear in the FS direction.

Sometimes a discharge element attaches to the photoreceptor at the BCR nip area, causing white streaks to appear at intervals of Photoreceptor Pitch.

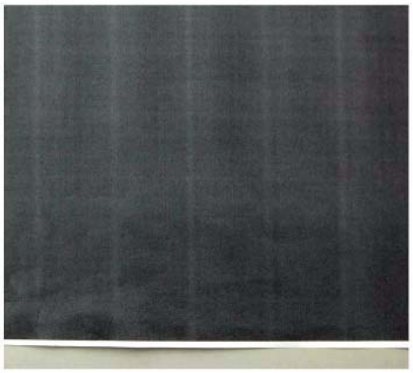

j0wa31014

Figure 1 Charging Roll Pitch White Streaks-2

This problem may occur in a machine that has had a long rest or at the first operation of the day. (Halftone Image)

Initial Actions

Make approx. 10 to 30 prints using dC612. If the streaks do not disappear, perform the procedure.

Procedure

NOTE: *If the problem occurs with the Y, M, or C Drum, print Full Color images. If it occurs with the K Drum, print either Full Color or Black and White images.*

Change NVM location 751-327 (Recovery from Deletion Mode SW) to 1. (Default is “0.”)

When 1 is selected and all the following conditions are met, the recovery sequence is initiated. The following NVM locations can be adjusted according to the installation environment and/or the situation where the problem occurred.

- Environment Condition

  The temperature inside the machine is higher than [Deletion Set Temp Threshold] (751-328) and the humidity inside it is higher than [Deletion Set Humidity Threshold] (751-329). If you want to exclude the environment condition, set the minimum value.
- Image Area Coverage Condition

  Deletion Average A/C of each color (751-331 to 334) is higher than Deletion A/C Threshold (751-330). If you want to exclude the Image Area Coverage condition, set the minimum value.
- Job Rest Condition

  The Rest Time is longer than the Rest Time Threshold (751-335=100 min.). If you want to exclude the Rest condition, set the minimum value.

A length of Idling Operation Time can be adjusted by use of Recovery from Deletion Mode: Length (751-338=9,425mm). The default (recommended) enables the parts to rotate for approx. one minute. The maximum value (30,160mm) enables them to rotate for approx. 4 minutes.

IQ 4 Photoreceptor Pitch Color Streaks

Vibrations during transportation of the Drum Cartridge cause the BCR or the Blade to rub against the photoreceptor, thereby causing electrostatic memory to be left on the photoreceptor. This may cause thin color streaks to appear in the FS direction on the highlight area at intervals of Photoreceptor Pitch (94mm).

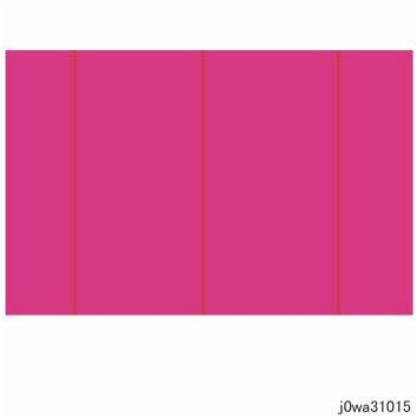

Figure 1 Photoreceptor Pitch Color Streaks

This problem may occur immediately after the Drum Cartridge is replaced.

Procedure

1. Make approx. 10 to 30 prints.

   If the problem occurs with the Y, M, or C Drum, print Full Color images. If it occurs with the K Drum, print either Full Color or Black and White images.

IQ 5 Background on Coated Paper

Background is more visible on coated paper than on plain paper.

Initial Actions

Verify that the coated paper has a worse level of background than plain paper.

Procedure

Change the NVM locations listed below to increase the cleaning field voltage by approx. 10 to 20V to reduce the background on the Drum. Note that this will sacrifice the reproducibility of fine lines and highlight areas.

1. Color (YMC): Add +10-+20 to each of all the following values:
   - NVM location 753-237 CF Upper Limit Ref. Value - default = 110
   - NVM location 753-239 CF Lower Limit Ref. Value - default = 100
   - NVM location 753-241 CF Upper Limit: Lower Limit - default = 110
   - NVM location 753-243 CF Upper Limit: Upper Limit - default = 110
   - NVM location 753-245 CF Lower Limit: Lower Limit - default = 100
   - NVM location 753-247 CF Lower Limit: Upper Limit - default = 100

2. Black and White (K) or Color (K): Add +10-+20 to each of all the following values:
   - NVM location 753-238 CF Upper Limit Ref. Value - default = 110
   - NVM location 753-240 CF Lower Limit Ref. Value - default = 100
   - NVM location 753-242 CF Upper Limit: Lower Limit - default = 110
   - NVM location 753-244 CF Upper Limit: Upper Limit - default = 110
   - NVM location 753-246 CF Lower Limit: Lower Limit - default = 100
   - NVM location 753-248 CF Lower Limit: Upper Limit - default = 100

IQ 6 Toner Droplet Contamination - TBD

Random spatters of a-few-mm-long toner

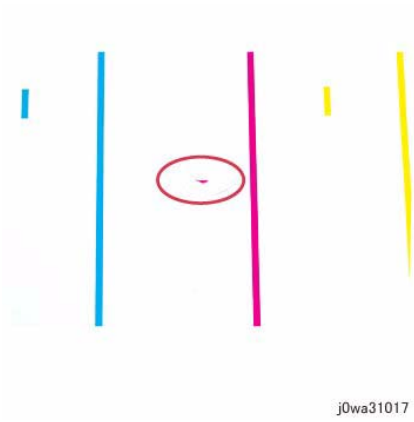

Figure 1 Toner Droplet Contamination

This occurs when the Developer Unit Cover is badly contaminated. As conditions that cause the cover to be contaminated, the following are given: rapid changes in humidity; alternate repetitions of images in large quantity of low area coverage rate and high area coverage rate; and others.

Procedure

Clean the Developer/Xero CRU.

If the above procedure does not resolve the problem, replace the Developer/Xero CRU.

TBD - Cannot determine exactl what “Developer/Xero CRU” is. There should be a reference to a specific part. Cannot find this nomenclatire in any other manual to indicate what is being called out here.

IQ 7 Smear

When the lead edge of paper enters the 2nd transfer, the 2nd-transfer area has a momentarily increasing load, causing a change in the speed of the IBT Drive Roll (speed reduction). This speed change changes the relative speed difference between the Drum surface and the IBT Belt surface at the 1st-transfer area for K color, causing a smear (1mm-wide streak appears in the SS direction at the position 125mm away from the lead edge of paper) to occur.

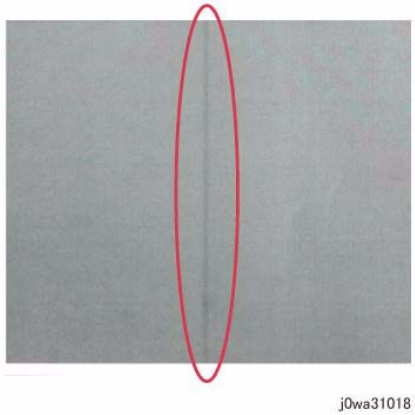

Figure 1 Smear

This problem occurs on heavyweight paper in Black and White Mode.

Procedure

1. Change the following NVM locations to the listed values:
   - 740-127: Plain B Smear Countermeasure SW from 0 to 1.
   - 740-128: Plain E Smear Countermeasure SW from 0 to 1.
   - 740-129: Plain G Smear Countermeasure SW from 0 to 1.
   - 740-130: Heavyweight 1S Smear Countermeasure SW from 0 to 1.
   - 740-131: Heavyweight 2S Smear Countermeasure SW from 0 to 1.

NOTE: *The above NVM changes make the IOT operate in the FC mode, regardless of the selected Controller color mode (Color Preferred/Black and White Preferred/ACS), when performing monochrome printing on the above types of paper.*

Use the Heavyweight 1S mode and the Heavyweight 2S mode for coated paper 1S and coated paper 2S respectively.

IQ 8 Rough Black

On textured or poorly formed paper, toner is not transferred to the surface irregularities, causing a rough transfer.

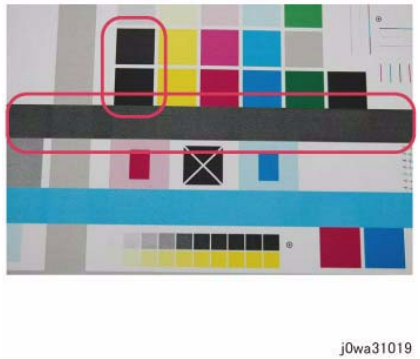

Figure 1 Rough Black

This occurs in modes other than Transparencies.

Procedure

1. Change the paper to a smoother paper.
2. Perform ADJ 9.15.

IQ 9 Damp Paper Transfer Failure

When paper is damp, it reduces its resistance. On the other hand, K color including carbon has a larger dielectric loss, so it requires a different electric field from the other colors. Therefore, the difference between paper resistance and toner resistance causes a larger difference between the electric field that multicolor transfer requires and the one that K-color transfer requires. This results in no latitude.

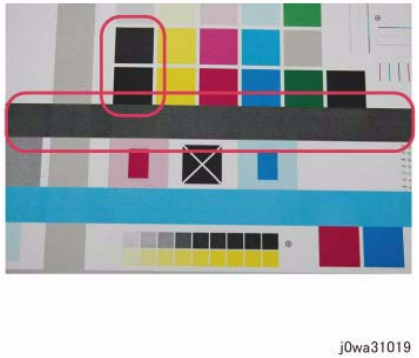

Figure 1 Damp Paper Transfer Failure

Procedure

1. Print using fresh paper of the same type as the paper exhibiting the defective image and compare the print with the defective print in K or Single Color Roughness and Deletion.

IQ 10 Toner Contamination at Lead/Trail Edge - TBD - see issues in RAP

Lead Edge: The lead edge of paper contacts the belt when it is transported from REGI to Transfer.

Trail Edge: When paper that looped between Transfer and Fusing is released from the 2nd-transfer nip, its trail edge moves in the reverse direction to the feed direction thereby contacting the surface of the 2nd BTR, or jumps up thereby contacting the Transfer Belt, thus causing toner contamination.

j0wa31020

Figure 1 Toner Contamination at Lead/Trail Edge

Initial Actions

Run a 1-sided print to check which side (transfer side or Side 2) is contaminated. **TBD - What should be done if it's on the transfer side or side 2 - why do this if it there is no difference in what is done in the procedure**

Procedure

NOTE: *If reduction of toner band is too great, may cause lower density, deletion, abnormal noise (Green Blade noise, Cleaning Blade squeaks). It is necessary to strike a balance.*

If fusing unit H/R speed is changed, may cause paper wrinkles, wetting defect, or a caterpillar defect to occur.

1. To control background, set to enlarge the cleaning field: **TBD - it is not clear how to do this from either Charger or R2 RAP**
2. Change the following NVM values to adjust the Fuser Motor speed for various paper types: **TBD - Is there a table somewhere that describes what all of the items in the following listing are - eg; what is "Plain A~G" or "Plain S". If so, it should be in the RAP**
   - Plain A~G (744-382, 744-383): 10046 -> 10026
   - Plain S (744-384): 9994 -> 9974
   - Heavyweight 1 BW (744-385): 10016-> 9994
   - Heavyweight 1 FC (744-387): 20030 -> 19990
   - Heavyweight 2 (744-389): 19950 -> 19910
   - Coated 1 BW (744-386): 9994-> 9974
   - Coated 1 FC (744-388): 19990 -> 19950
   - Coated 2 (744-390): 19950 -> 19910

IQ 11 Multicolor Transfer Failure

An increase in the electric resistance of paper due to a reduced moisture content after Side 1 fusing, or an increase in the resistance of the 2nd-transfer area due to low humidity and aging may make it impossible to obtain the necessary electric field for an operation, especially the 1st one of the day, in low-humidity environment.

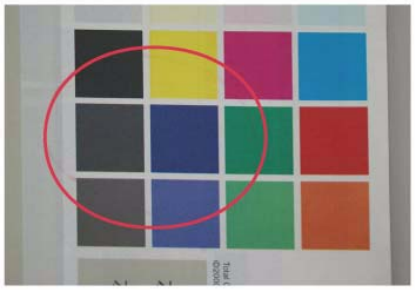

j0wa31021

Figure 1 Multicolor Transfer Failure

Due to the characteristics of EA-ECO toner, high Rsys (the 1st operation of the day in a low-temperature and low-humidity environment) requires a transfer voltage for the area where Multicolor Transfer and Micro White Spots cannot be dealt with simultaneously. The default is set so that priority will be put on multicolor transfer, so MWS may be visible starting on Side 1.

Initial Actions

Verify that the hue on side 2 becomes lighter when printing a high density image in a low temperature and low humidity environment.

Procedure

Increase the 2nd-transfer voltage by decreasing the single-color density or by changing the permissible range for MWS (Micro White Spots) (dC909).

IQ 12 Trail Edge Transfer Failure

After the trail edge of paper is released from the 2nd-transfer nip, it jumps up and unfused toner is retransferred to the Intermediate Transfer Belt. Defect is deletions (in the SS direction) or is rough within an 10mm-wide area including the margin from the trail edge

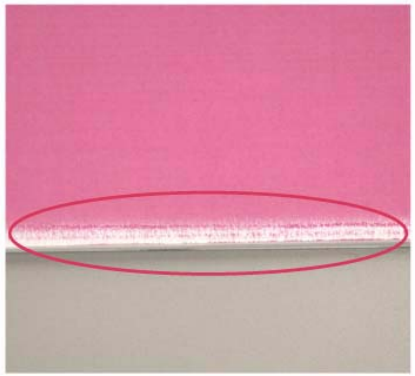

j0wa31022

Figure 1 Trail Edge Transfer Failure

Procedure

No corrective action.

IQ 13 Micro White Spots (Side 2)

When the resistance of the 2nd-transfer area is high, e.g., at the 1st operation of the day in a low-humidity environment, the transfer latitude between the multicolor area and the one-color area is narrow and the set voltage is in favor of multicolor transfer. Therefore, the voltage is a little excessive for one-color transfer, causing the transfer-nip discharge phenomenon.

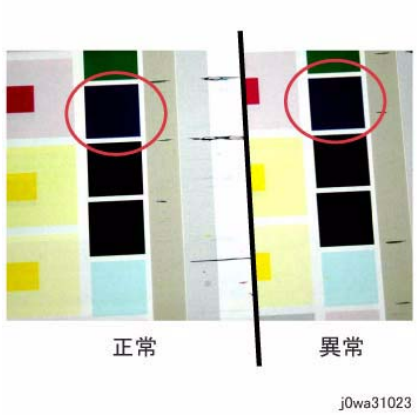

Figure 1 Micro White Spots

This occurs on Side 2 in a low-humidity environment.

Initial Actions

Verify that the Micro White Spots appear side 2 when printing in a low humidity environment.

Procedure

Reduce the 2nd-transfer voltage for the paper type in use by decreasing the single-color density or by changing the permissible range for MWS (Micro White Spots) (dC909).

NOTE: *As much as user offset can serve as a solution, both multi-color transfer and MWS cannot be simultaneously satisfied.Whichever is given priority will lead to deterioration of the other. Adjust based on the customer's expectation and requirement.*

IQ 14 Color Streaks

With Cin50% and Cin30%, streaks in the process direction reverse black and white. Approx. 1mm wide.

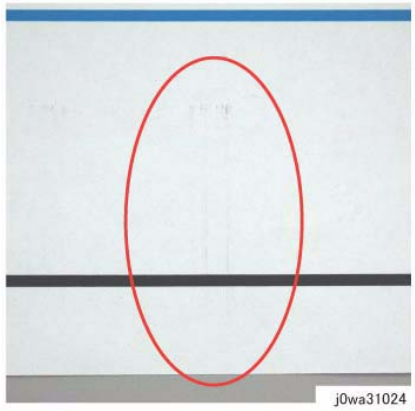

Figure 1 Color Streaks

This occurs when paper that is prone to produce paper dust is used, or at high R/L.

Procedure

1. Change the NVMs to change the reverse rotation frequency and amount for the Intermediate Transfer Unit.

   Ref.: The basic specification is that the reverse rotation starts at job end after 70 printouts.

   a. Reverse Rotation Switch: NVM745-075:

      0: Reverse at Job End.

      1: Reverse during Job.

      2: Do not reverse.

   b. Change Reverse Rotation Frequency NVMs: 745-077 and 745-078 (pv for performing reverse rotations at job end or at the segments of job) Reducing the value increases the frequency. Nominal 7000 (=70pv)

   c. Change Reverse Rotation Time NVM: 745-080. Increasing a nominal value of 170 increases the reverse rotation time.

IQ 15 Wetting

Distorted image (resembles a water stain) may appear at one side or both sides of the paper trail edge when printing halftone fill.

Figure 1 Wetting

A slight wetting may occur on a uniform image like halftone fill. This is highly likely to occur under the conditions such as the first operation of the day, a high-temperature and high-humidity environment, and damp paper.

Procedure

No action in particular is required. Try not to print in early mornings. Ask the customer to use fresh paper whenever possible.

IQ 16 Fuser Wrinkles

When long-grain paper is damp, it becomes wavy on the lead and trail edge. If the paper enters the Fuser nip area in this condition, it cannot be handled well and wrinkles.

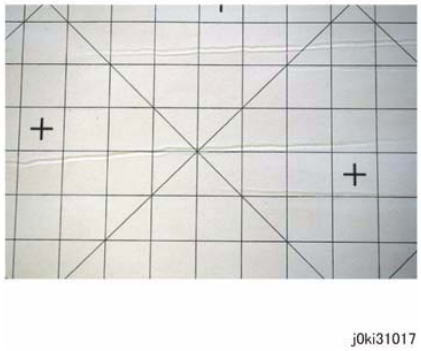

Figure 1 Fuser Wrinkles

Procedure

1. Check the paper in the tray to see how damp it is or whether its lead edge is wavy.
2. Change the paper feed direction (LEF).
3. Use fresh paper.
4. Use short-grain paper.

IQ 17 Streaks on Coated Paper due to Rubbing (EXIT)

At output of heavy coated paper to Exit 1 in Duplex Mode in a high-temperature/high-humidity environment, Side 1 may rub against the Exit Gate, thus exhibiting streaks.

Streaks caused by rubbing appear on Side 1 in the Duplex mode.

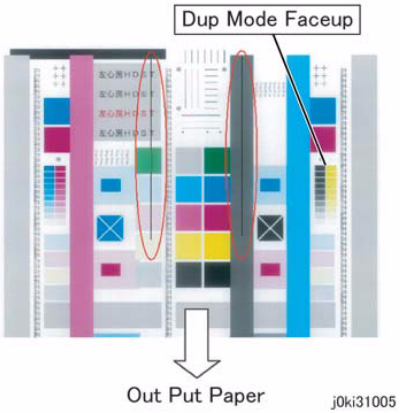

Figure 1 Streaks on Coated Paper

Procedure

Route Duplex output to the Exit 2 tray

IQ 18 Caterpillar Mark (Transfer)

After being stripped in the 2nd-transfer area, paper rubs against the DTS HSG, etc. thereby letting particles of toner unfused on itself scatter. This results in deletions of a caterpillar pattern.

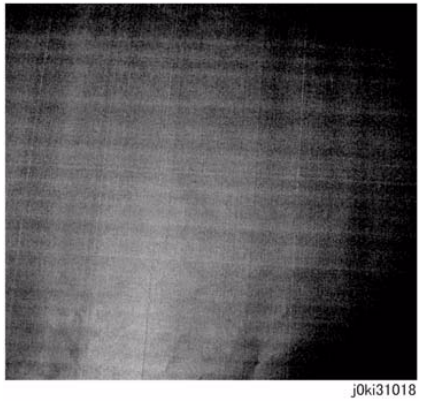

Figure 1 Caterpillar Mark

This is caused by low electric charge in toner.

The conditions causing stress are a low-temperature and low-humidity environment, the upper limit of DTS HSG. warpage, the TC-higher side, a large amount of paper loop, and a small amount of 1st-transfer current.

Procedure

1. Run a dozen sheets of solid 2-sided output before proceeding because this problem may be worse during condensation.
2. Reduce the TC (dC991) and increase the 1st-transfer current. Use the process for increasing the 1st-transfer current described in IQ 32.
3. Increase the 2nd-transfer voltage by decreasing the single-color density or by changing the permissible range for MWS (Micro White Spots) (dC909).
4. Replace the 2nd BTR Assembly (PL 6.1).

IQ 19 Background (IPS) - TBD - This is from Charger. Screens and process listed different for Jav.

The default background suppression function is unable to fully remove the background.

Figure 1 Background

Initial Actions

Set Background Suppression to "Enabled" and check whether background still occurs on the customer's document.

Procedure

Defaults

The contents in Table 1 are only rough standards. The suppression results may differ depending on the document.

Table 1 Rough Standard for Suppression Levels

Suppression Level	**level of effect on documents**	
Output Color	**Color**	**BW**
Normal	White paper such as P paper	Bleed is reduced slightly.
Higher (+1): Default	Recycled	White paper such as P paper, Recycled paper, Newspaper
Higher (+2)	Old recycled paper, Dark recycled paper	The suppression amount is more than Higher (+1).
Higher (+3)	Newspaper (with some bleed)	The suppression amount is more than Higher (+2).
Higher (+4)	Newspaper	Reduces background to the level at which pencil text (light text) can be read.

Adjustment Method

The adjustment methods are different depending on **Service** and **Color Mode** (Table 2).

Table 2 Background Suppression Level Adjustment Method by Mode

Service	**Color Mode**	**Adjustment Method**
Copy	Full Color Mode	System Administrator (Tools) Mode
	BW	CE Mode (NVM)
Fax	BW	CE Mode (NVM)
Scan	Full Color Mode	System Administrator (Tools) Mode
	BW	CE Mode (NVM)

Adjustment in System Administrator Tools

1. Copy Mode Adjustment:
   - Enter Admin Mode (GP 2) and select the Tools tab.
   - Make the following selections on the UI: **Service Settings** > **Copy Service...** > **Copy Control** > **Background Suppression Level (Photo & Text)** or **Background Suppression Level (Text)**
   - Set the appropriate suppression level (Table 1).
2. Scan Mode Adjustment
   - Enter Admin Mode (GP 2)
   - Make the following selections on the UI: **System Settings** > **Scan Service Settings** > **Other Settings** > **Background Suppression Level**
   - Set the appropriate suppression level (Table 1).

Adjustment in NVM

Set the NVM locations in Table 3 according to the description below.

Table 3 Background Suppression Offset Level

NVM loc.	**Parameter**	**Range**	**default**
715-631	Text & Photo Mode (Print, Photograph, Copy)	0~4095	273
715-633	Text Mode (Normal, Pencil Text)	0~4095	273
715-637	Text Mode (Tracing Paper)	0~4095	273

Description of NVM Settings

The NVM locations which control BW background suppression are 12 bits long, broken up into 4 bits for each scan method (Copy, Fax, and Scan). The NVM value is determined in binary first, and then converted to a decimal number:

- The initial value 273 (decimal) indicates that the background suppression levels are 1 for all scan methods.
- When the background suppression levels are 2 for all scan methods, it is = 546 (decimal) = 0010...0010...0010 (binary)
- When the background suppression levels are 3 for all scan methods: = 819 (decimal) = 0011...0011...0011 (binary)

- When the background suppression levels are 4 for all scan methods: = 1092 (decimal) = 0100...0100...0100 (binary)

Precautions

Background might not be suppressed up to the user's expectations on the following documents:

1. Photo documents having their high density sections placed in the background detection areas.
2. The document contains dark frames or fringes.
3. The document contains texts on dark background.
4. Negative document

For the document types (1) and (2), the suppression level may be improved by changing the background suppression method from **High Speed** to **High Quality**:

- Enter Admin Mode (GP 2)
- Make the following selections on the UI: **System Settings** > **Common Service Settings** > **Image Quality** > **Background Suppression Level**
- Set the appropriate suppression level (Table 1).

For the case of (3), density adjustment may be helpful.

IQ 19 Background on Gloss RAP Ref - TBD Nwd RAP for ref only

Use this RAP when the background level on Gloss paper is worse than the background level of Plain paper.

Initial Actions

Verify that the background level is worse than that on Plain Paper.

NOTE: *Increasing the value of the NVM from the default will sacrifice the reproducibility of fine lines and highlight sections.*

Procedure

1. Changing these NVM values should be performed only for the color exhibiting the problem.
   - 753-054: Reference CF [Y]
   - 753-055: Reference CF [M]
   - 753-056: Reference CF [C]
   - 753-057: Reference CF [K]
2. Change the NVM for the target color from “110” (default value) to “120” if high background was observed when printing onto coated paper.
3. After changing NVM, power Off/On the machine. Enter the Diagnostics mode and execute ProCon On Print (ADJ 9.7).
4. Check the image quality on the test print (coated paper).
5. If the image quality is good, then the procedure is completed.
6. If the image quality is still not good, then change the NVM value to “130”. Power Off/On the machine. Enter the Diagnostics mode and execute ProCon On Print (ADJ 9.3).
7. Check the image quality on the test print (coated paper).
8. If the image quality is good, then the procedure is completed.
9. If high background becomes worse after changing the NVM, return the NVM back to it’s original (Default) value.

IQ 20 Light Ink Support (IPS) - TBD

This is used to copy an image to be lighter than the current BW Copy settings; e.g. when using light ink.

1. Density adjustment cannot lighten images to the light ink level.

Procedure

Consult with the customer to determine which (or all) level of Photo mode (Lighten +1 to +3) is to be set with light ink support adjustment.

1. Change the NVM values listed in the following table to adjust the "Lighten +1", "Lighten +2", and "Lighten +3" of Photo mode.

Table 1 Table of Light Ink Support

	Chain-Link and Recommended Setting Value
Photo Mode "Lighten +3"	[Chain-Link: 715-692]: 37 (recommended value) Settable range: [0-64] (Default = 0) Note 1) When 0 is set, the state is the same as when 64 is set. Note 2) When 20 or lower is set, the result may be blank paper.
Photo Mode "Lighten +2"	[Chain-Link: 715-693]: 40 (recommended value) Settable range: [0-64] (Default = 0) Note 1) When 0 is set, the state is the same as when 64 is set. Note 2) When 15 or lower is set, the result may be blank paper.
Photo Mode "Lighten +1"	[Chain-Link: 715-694]: 43 (recommended value) Settable range: [0-64] (Default = 0) Note 1) When 0 is set, the state is the same as when 64 is set. Note 2) When 10 or lower is set, the result may be blank paper.

Density Adjustment: Darkening the Highlight

NOTE: *This countermeasure is only valid for Copy BW images.*

IQ 21 Highlight Density Reproduction (NVM Darken +3) (IPS) - TBD

This is used to reproduce the highlight (light colors) in darker shade.

1. To prevent background, the highlight reproducibility is adjusted.
2. No special actions required.

Procedure

1. Set the density adjustment to "Darken +1" ~ "Darken +3."

   * When the highlight is not reproduced after performing the density adjustment in (1), it can be adjusted by the following method:

2. Set the background suppression to "Disabled."

   * Although may cause background to appear, it improves the highlight reproducibility.

3. In the case of Copy Service, adjust the density by using "DC919: Color Balance Adjustment."

   In the case of Scan Service, increase the "Scan Resolution."

   * The highlight reproducibility is improved more with 600dpi than 200dpi.

4. The following describes the adjustment method that is only valid for Output Color "BW" and Original Type "Text."

   Density Adjustment: Darkening the Highlight

Table 1 Density Adjustment: Darkening the Highlight

NVM Chain-Link	Service	Mode	How to Use
715-720	Copy	Output Color "BW" Original Type "Text" Density "Normal"	The highlight is reproduced darker when a value larger than the default value (128) is set. The recommended value is 120.
715-721	Copy	Output Color "BW" Original Type "Text" Density "Darken +3"	The highlight is reproduced darker when a value larger than the default value (128) is set. The recommended value is 120. The density of "Darken +3" and "Normal" may be reversed depending on the setting value.
715-722	Fax Scan	Color Scanning "BW" Original Type "Text" Density "Normal"	The highlight is reproduced darker when a value larger than the default value (128) is set. The recommended value is 125.
715-723	Fax Scan	Color Scanning "BW" Original Type "Text" Density "Darken +3"	The highlight is reproduced darker when a value larger than the default value (128) is set. The recommended value is 125. The density of "Darken +3" and "Normal" may be reversed depending on the setting value.

* The NVM value adjustment is done by visually checking the copy or scan output while performing the adjustment.

IQ 22 Highlight Density Reproduction (NVM Lighten +3) (IPS) - TBD

This is used to reproduce the density in lighter shade.

No special actions required.

Procedure

1. Set the density adjustment to "Lighten +1" ~ "Lighten +3."

   * When desired image quality cannot be obtained after performing the density adjustment in (1), the following adjustment method is also available:

   Countermeasure (2): In the case of Copy Service, adjust the density by using "Color Balance Adjustment."

   The following describes the adjustment method that is only valid for Output Color "BW" and Original Type "Text."

   Density Adjustment: Lightening

Table 1 Density Adjustment: Lightening

NVM Chain-Link	Service	Mode	How to Use
715-720	Copy	Output Color "BW" Original Type "Text" Density "Normal"	The highlight is reproduced lighter when a value larger than the default value (128) is set. The recommended value is 136.
715-721	Copy	Output Color "BW" Original Type "Text" Density "Darken +3"	The highlight is reproduced lighter when a value larger than the default value (128) is set. The recommended value is 136. The density of "Darken +3" and "Normal" may be reversed depending on the setting value.
715-722	Fax Scan	Color Scanning "BW" Original Type "Text" Density "Normal"	The highlight is reproduced lighter when a value larger than the default value (128) is set. The recommended value is 132.
715-723	Fax Scan	Color Scanning "BW" Original Type "Text" Density "Darken +3"	The highlight is reproduced lighter when a value larger than the default value (128) is set. The recommended value is 132. The density of "Darken +3" and "Normal" may be reversed depending on the setting value.

* The NVM value adjustment is done by visually checking the copy or scan output while performing the adjustment."

IQ 23 Bleed on Tracing Paper (IPS) - TBD

When copying or scanning Tracing Paper document, bleed or background occur around the texts.

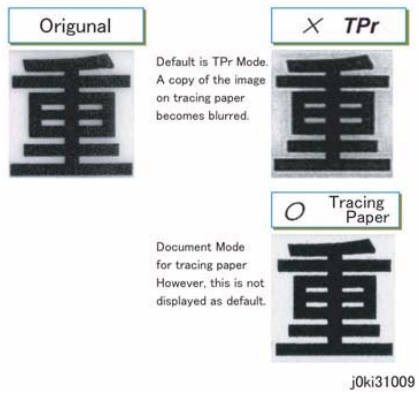

Figure 1 Bleed on Tracing Paper

Because of the characteristics of Tracing Paper, shades are generated around the texts when scanning using CCD.

Procedure

Check that Lightweight mode is enabled:

1. Copy Service Settings

   Perform the following procedure to display the Lightweight mode on the UI.

   Enter **Admin Mode** -> **System Settings** tab -> **Copy Service Settings** -> **Copy Control** -> **Original Type** - **See-Through Paper** -> **Enabled**

   The Lightweight mode is selectable only when Output Color = BW and Original Type = Text are specified.

2. Scan Service Settings

   Change the following NVM values to enable the Lightweight mode.

   NVM715-669 0: Normal -> 1: Tracing Paper mode

   Select Color Scanning = BW and Original Type = Photo for the Lightweight mode.

   (The Lightweight mode button does not exist on the UI. It is attached as a background mode to the Photo mode.)

IQ 25 CVT Streaks (IPS)

Dirt such as paper dust is generated at the DADF scan position. The streaks in the SS direction are created when that contamination is scanned.

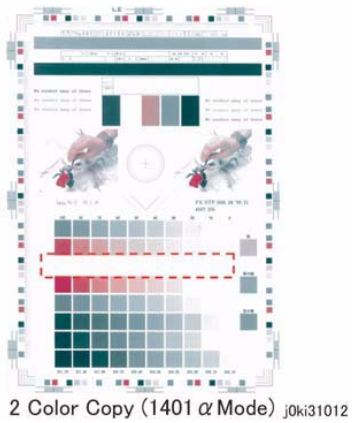

Figure 1 CVT Streaks

Procedure

1. Clean the DADF scan position.

IQ 26 Copy: Gradation Jump in Text & Photo (IPS) - TBD

In the BW and Text & Photo Copy mode, gradation jump occurs on 100-line photo documents.

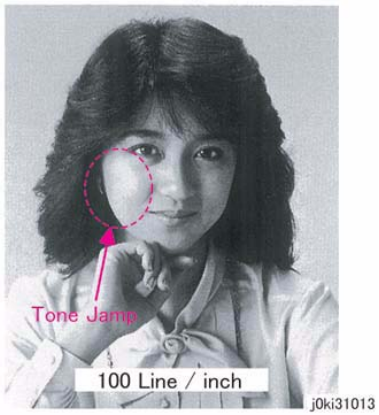

Figure 1 Gradation Jump

As Text & Photo mode gives priority to 175 lpi halftone dots and text quality, Sharpen Edge is performed for lower lpi.

Procedure

Table 1 100-line document: Countermeasures

Countermeasures	Secondary Defect
Set the Original Type to "Photo."	The text becomes blurred.
Select [Tools] → [Common Service Settings] → [Image Quality Adjustment] → [Image Quality] and adjust [Photo & Text Recognition]	Image quality of photographs deteriorate in [More Text] and [Text] settings. Text becomes blurred in [More Photo] and [Photo] settings.

IQ 27 Scan: Smeared Text, JPEG Mosquito Noise (IPS)

Color texts are blurred and mosquito noise is generated around the texts due to JPEG compression.

Figure 1 Mosquito Noise

As the JPEG compression technique is for images, not texts, noise is easy to crop up when it is used to compress texts.

Procedure

1. From the Services screen select **Workflow Scanning** → **Advanced Settings** → **Quality/ File Size** → **Highest Quality** (Secondary defect: The file size becomes bigger).

IQ 28 Moire In Text Mode (Fine) BW Scan/Fax For 133 lpi Originals (IPS)

When a document with tint on the whole paper or a background image is scanned using Fax Text mode in High Quality (Fine), the file size or the Fax transmission time may increase drastically.

Figure 1 Moire

As the Text mode is designed to highlight texts, it generates halftone dot moire.

Procedure

Scan the customer's document (photo image) in Binary Scan mode and check whether moire is generated and the file size became bigger. Set User Mode settings per Table 1.

Table 1 133-line document: Countermeasures

Countermeasures	Secondary Defect
Set the Original Type to **Photo**.	As the amount of data increases in Text & Photo mode, the machine takes a longer time for transmission.
Set the density adjustment to **Lighten** and the sharpness to **Soften**.	The text quality is degraded.

IQ 29 Copy: Bleed on 2 Sided Document (IPS) - TBD

Bleed occurs in the Copy BW and Text mode.

Because the gradation feature is designed to improve the reproducibility of Low Contrast, when bleed density of the document is high, the background suppression function might not be able to remove it completely.

Procedure

Bleed on document countermeasures.

Table 1 Bleed on document: Countermeasures

Countermeasures	Secondary Defect
Switch the AE suppression level settings. (Switch the NVM) **WHAT NVM - TBD**	Reproducibility of highlights is degraded.
Set the density adjustment to "Lighten +1."	The density on the whole area becomes lighter and the reproducibility of highlights is degraded.

IQ 30 Copy: Platen Background (IPS) - TBD

When A4 stark white paper such as J Paper/Premier 80 is scanned into A3 when in Copy BW Text mode and AE is ON, the platen back density is reproduced outside of the copy range.

Because paper such as J paper/Premier 80 has a low background detection level, the density of the Platen Back might not be fully removed depending on the S/N level status of the IIT.

Procedure

Platen Background Countermeasures

Table 1 Platen Background: Countermeasures

Countermeasures	Secondary Defect
Switch the AE suppression level settings. (Switch the NVM) **TBD - WHAT NVM**	Reproducibility of highlights is degraded.
Set the density adjustment to "Lighten +1."	The density on the whole area becomes lighter and the reproducibility of highlights is degraded.
Set the sharpness adjustment to "Soften +1."	The text becomes blurred.

IQ 31 White Streaks due to Clogged Trimmer (Developer) - TBD

When foreign objects such as dirt, dust and toner agglomerate are present in the Toner Cartridge, on the Toner Supply Path, or in the Developer Unit and such objects reach to the area between the Developer Roll and the Trimmer, this obstructs the formation of a layer of developer.

Procedure

1. Clean the ROS Unit.
2. If the white streaks do not disappear, replace the Developer/Xero CRU **TBD - which cru does this refer to drum or toner cartridge or both**

IQ 32 Heat Haze/Mock-Heat Haze - TBD

Note to Reviewer: This RAP is a rewrite combining the RAPs from Charger, Rookie 2, and Northwood. Please review carefully. The original Charger, Rookie 2, and Northwood RAPs are included after this for reference purposes.

Heat Haze and Mock-Heat Haze are generated at different places and in slightly different ways.

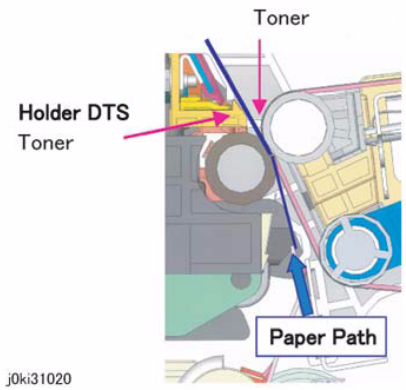

Figure 1 Heat Haze/Mock-Heat Haze

- Heat haze occurs at the place where paper is stripped from the IBT Belt. Spatters of toner in small clouds are seen around the Solid Patch. (Figure 1 and Figure 2)

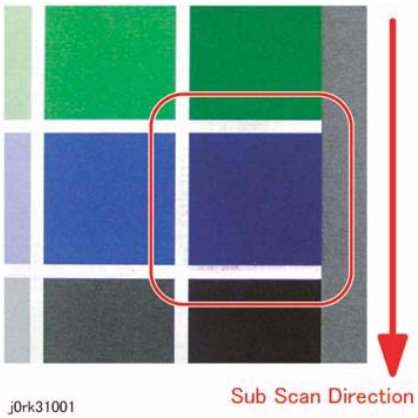

Figure 2 Heat Haze

- Mock-Heat Haze occurs when the paper rubs against the Holder DTS (Chute at the Transfer Exit) and is charged, thereby causing toner to scatter to the lead edge/trail edge of the solid area. Part of the spatters may form streaks. (Figure 1 and Figure 3)

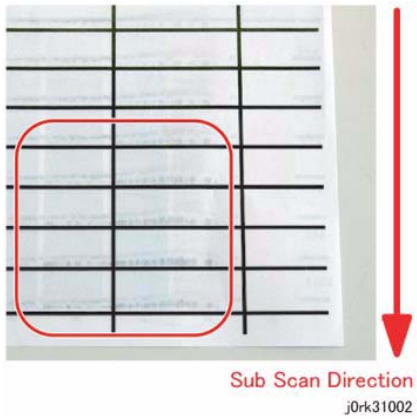

Figure 3 Mock-Heat Haze

- Also, in Mock Heat Haze (Halftone Image), paper becomes strongly electrically charged at the minus side, and positive corona discharge occurs between the grounded Holder DTS and the paper, causing toner to scatter, and branch-like (pulsation-like) patterns can be seen along the electrical discharge portion. (Figure 1 , Figure 4)

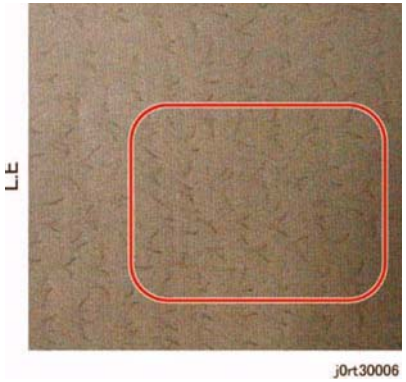

Figure 4 Mock-Heat Haze (Halftone Image)

Initial Actions

1. Print the 2nd-transfer voltage offset mode chart (dC909) to check whether the defect occurs for Single Color K or multiple colors, and if it changes at the 2nd-transfer voltage.
2. Print a half tone test page (dC612).
3. While increasing the voltage of the secondary transfer, perform a 2 Sided sampling of halftone image of single K color (45) to see if the branch-like patterns change.

Procedure

1. Adjust toner density (dC991). If the TC is higher after the installation, reduce the TC.
2. When heat haze/ mock-heat haze occurs at the installation, make 25 A3 prints of the test chart, etc.
3. Increase the 2nd voltage based on the result of 1. (2nd Voltage Offset)

   NOTE: *Effective mainly for Heat Haze.*

4. Perform the following procedure to Increase the 1st-transfer current value.

   NOTE: *Corrective action for toner scattering around a K-color character (Mock-Heat Haze)*

   a. Check NVM 745-002 (dC131) (Environment No. selected based on temperature and humidity) and write down the value. This value indicates the internal environment (temperature and humidity) of the machine and is stored in the form of an integer between 1 and 10. The higher the temperature and humidity are, the smaller the value is, while the lower, the larger.

   b. Change to the 1st-transfer current value (ref. value) corresponding to the conditions under which the problem occurred (model and color mode + the above value (1)).
      - Refer to Table 1 to learn in which NVM location to change the setting.
      - Change the values before and after the value written down in the above step (1) (e.g.: if the value is “5”, change 4 and 6 too) because the internal temperature and humidity of the machine vary slightly within the day.
      - Values to be changed:
        – Envi. No. 1~6@P/S 126mm/s: 97->107; Envi. No. 7~10@P/S 126mm/s: 107->117
        – Envi. No. 1~6@P/S 63mm/s: 53->58; Envi. No. 7~10@P/S 63mm/s: 53->58

   E.g.: If this problem occurs with a 126mm/s (plain paper mode) monochrome print and the value in 745-002 is “9”, change 107 to 117 in 745-167, 745-171 and 745-175.

Table 1 Environment No.

		745-002 (Environment No.)									
		1	**2**	**3**	**4**	**5**	**6**	**7**	**8**	**9**	**10**
Y	126	745-136	745-140	745-144	745-148	745-152	745-156	745-160	745-164	745-168	745-172
	63	745-096	745-100	745-104	745-108	745-112	745-116	745-120	745-124	745-128	745-132
M	126	745-137	745-141	745-145	745-149	745-153	745-157	745-161	745-165	745-169	745-173
	63	745-097	745-101	745-105	745-109	745-113	745-117	745-121	745-125	745-129	745-133
C	126	745-138	745-142	745-146	745-150	745-154	745-158	745-162	745-166	745-170	745-174
	63	745-098	745-102	745-106	745-110	745-114	745-118	745-122	745-126	745-130	745-134

Table 1 Environment No.

		745-002 (Environment No.)									
		1	**2**	**3**	**4**	**5**	**6**	**7**	**8**	**9**	**10**
K	126	745-139	745-143	745-147	745-151	745-155	745-159	745-163	745-167	745-171	745-175
	63	745-099	745-103	745-107	745-111	745-115	745-119	745-123	745-127	745-131	745-135
Default		126mm/s: 97; 63mm/s: 53						126mm/s: 107, 63mm/s: 53			
After change		126mm/s: 107; 63mm/s: 58						126mm/s: 117, 63mm/s: 58			

- After changing the value in the NVM locations listed in Table 1, output a test print and then check that the 1st-transfer output has changed as follows: NVM 745-032 to -035 (126mm/s 1st-transfer last output value storage) and NVM 745-028 to -031 (63mm/s 1st-transfer last output value storage).

  NOTE: *These NVM locations store the current values that were output last for the colors each.*

NOTE: *This adjustment may cause the problem of ghosts (residual images due to static electricity) to be worse. Refer to IQ 37.*

Print the test pattern and check the print. If the level is not improved, reduce the changed value in Step 3 .

5. Reduce the TC by 1%. Delta ATC Target Manual Correction Amount

   NOTE: *Effective for Heat Haze/Mock-Heat Haze*

   - Reduce K color by 1%. 752-792: 0 -> 35
   - Reduce Y color by 1%. 752-789: 0 ->35
   - Reduce M color by 1%. 752-790: 0 -> 35
   - Reduce C color by 1%. 752-791: 0 -> 35

   NOTE: *This change makes Toner Density Adj. Target Value shift by 35 as well.*

   NOTE: *Delta ATC Target Manual Correction Amount Symbols*
   - *+ (plus): TC down*
   - *- (minus): TC up*

CAUTION

The occurrence of both the Heat Haze and the Mock-Heat Haze is easily affected by the orientation of paper. So, as the final step, reprint an image that is solid in many areas and check it. Especially, as to the 2nd-voltage offset chart, only a one-patch area can be helpful because the 2nd-transfer voltage changes in the course from the lead edge to the trail edge.

IQ 32 Heat Haze/Pseudo-Heat Haze - TBD Original Charger RAP for Reference only

Heat haze Pseudo-heat haze is generated at different places and in slightly different ways.

- Heat Haze

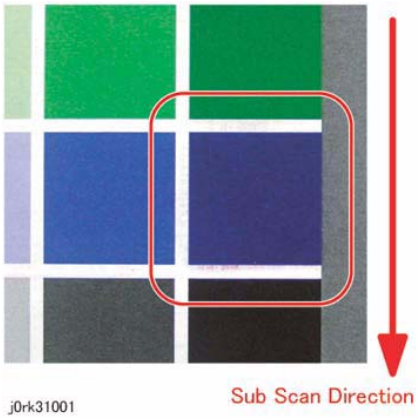

Figure 1 Heat Haze

- Pseudo-Heat Haze

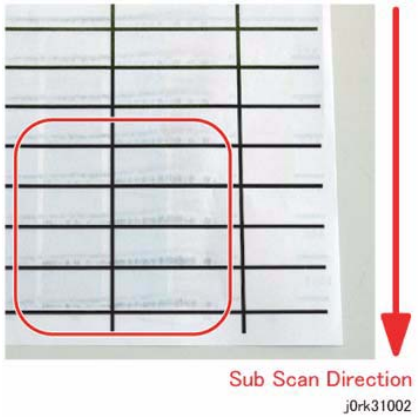

Figure 2 Pseudo-Heat Haze

- Heat haze occurs at the place where paper is stripped from the IBT Belt. Spatters of toner in small clouds are seen around the Solid Patch. (Figures 1 and 2)
- Pseudo-heat haze occurs as follows: the running paper rubs against the Holder DTS (Chute at the Transfer Exit) and is charged, thereby causing toner to scatter to the lead edge/trail edge of the solid area. Part of the spatters may form streaks. (Figures 1 and 3)

Procedure

1. Print the 2nd-transfer voltage offset mode chart to see if any heat haze occurs with Single Color K or multicolor and if it changes affected by the 2nd-transfer voltage.

   CAUTION

   Select paper (a specific tray) and select a paper type.
2. Adjust toner density. Check. If the TC is higher after the installation, reduce the TC.
3. When heat haze/ pseudo-heat haze occurs at the installation, make 25 A3 prints of the test chart, etc.
4. Increase the 2nd voltage.

   Increase the 2nd voltage based on the result of 1. (2nd Voltage Offset)

   -> Effective mainly for Heat Haze.
5. Increase the 1st-transfer current value. Perform the following procedure.

   Corrective action, 1st-transfer current adjustment, for toner scattering around a K-color character (pushed-heat haze)

   a. See 745-002 (Environment No. selected based on temperature and humidity) and write down the value. This value indicates the internal environment (temperature and humidity) of the machine and is stored in the form of an integer between 1 and 10. The higher the temperature and humidity are, the smaller the value is, while the lower, the larger.

   b. Change to the 1st-transfer current value (ref. value) corresponding to the conditions under which the problem occurred (model and color mode + the above value (1)).
      - To learn in which NVM location to change the setting, see the table below.
      - Change the values before and after the value written down in the above step (1) (e.g.: if the value is “5”, change 4 and 6 too) because the internal temperature and humidity of the machine vary slightly within the day.
      - Values to be changed:
        – Envi. No. 1~6@P/S 126mm/s: 97->107; Envi. No. 7~10@P/S 126mm/s: 107->117
        – Envi. No. 1~6@P/S 63mm/s: 53->58; Envi. No. 7~10@P/S 63mm/s: 53->58

   E.g.: If this problem occurs with a 126mm/s (plain paper mode) monochrome print and the value in 745-002 is “9”, change 107 to 117 in 745-167, 745-171 and 745-175.

Table 1 Environment No.

		745-002 (Environment No.)									
		1	**2**	**3**	**4**	**5**	**6**	**7**	**8**	**9**	**10**
Y	126	745-136	745-140	745-144	745-148	745-152	745-156	745-160	745-164	745-168	745-172
	63	745-096	745-100	745-104	745-108	745-112	745-116	745-120	745-124	745-128	745-132
M	126	745-137	745-141	745-145	745-149	745-153	745-157	745-161	745-165	745-169	745-173
	63	745-097	745-101	745-105	745-109	745-113	745-117	745-121	745-125	745-129	745-133

Table 1 Environment No.

		745-002 (Environment No.)									
		1	**2**	**3**	**4**	**5**	**6**	**7**	**8**	**9**	**10**
C	126	745-138	745-142	745-146	745-150	745-154	745-158	745-162	745-166	745-170	745-174
	63	745-098	745-102	745-106	745-110	745-114	745-118	745-122	745-126	745-130	745-134
K	126	745-139	745-143	745-147	745-151	745-155	745-159	745-163	745-167	745-171	745-175
	63	745-099	745-103	745-107	745-111	745-115	745-119	745-123	745-127	745-131	745-135
Default		126mm/s: 97; 63mm/s: 53						126mm/s: 107, 63mm/s: 53			
After change		126mm/s: 107; 63mm/s: 58						126mm/s: 117, 63mm/s: 58			

- After changing the value in the NVMs, output a test print. After that, check that the 1st-transfer output has changed, seeing 745-032 to -035 (126mm/s 1st-transfer last output value storage*2) and 745-028 to -031 (63mm/s 1st-transfer last output value storage*2).

  ->*2: These NVM locations store the current values that were output last for the colors each.

NOTE: *This adjustment may cause the problem of ghosts (residual images due to static electricity) to be worse.*

Print the test pattern and check the print. If the level is not improved, reduce the changed value in the above step (2).

-> Effective for Heat Haze/Pseudo-Heat Haze

6. Reduce the TC by 1%. Delta ATC Target Manual Correction Amount
   - Reduce K color by 1%. 752-792: 0 -> 35
   - Reduce Y color by 1%. 752-789: 0 ->35
   - Reduce M color by 1%. 752-790: 0 -> 35
   - Reduce C color by 1%. 752-791: 0 -> 35

   -> This change makes MAX Setup/Toner Density Adj. Target Value shift by 35 as well.

NOTE: *Delta ATC Target Manual Correction Amount Symbols*

- *+ (plus): TC down*
- *- (minus): TC up*

CAUTION

The occurrence of both the heat haze and the pseudo-heat haze is easily affected by the posture of paper. So, as the final step, reprint an image that is solid in many areas and check it. Especially, as to the 2nd-voltage offset chart, only a one-patch area can be helpful because the 2nd-transfer voltage changes in the course from the lead edge to the trail edge.

IQ-20 Heat Haze/Mock Heat Haze - TBD - Rookie 2 RAP for Refererence Only

Heat Haze/Mock Heat Haze* differs in location and way of occurrence.

*Heat Haze/Mock Heat Haze differs in the way it occurs depending on the sampling chart.

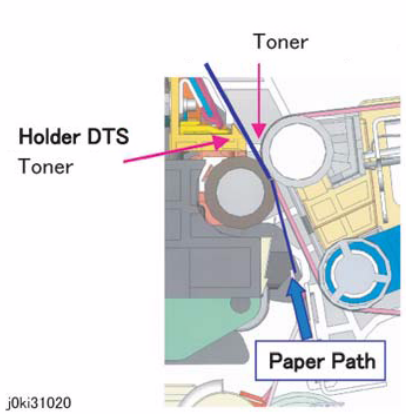

Figure 1 j0ki31020

- Heat Haze

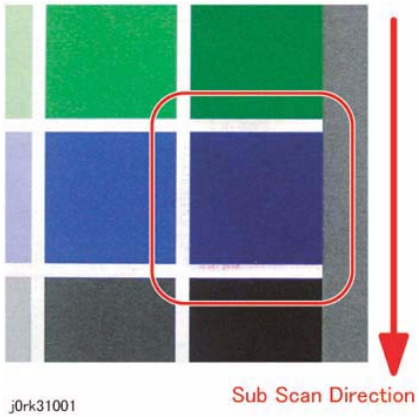

Figure 2 j0rk31001

- Heat Haze/Mock Heat Haze (Line/Text Image)

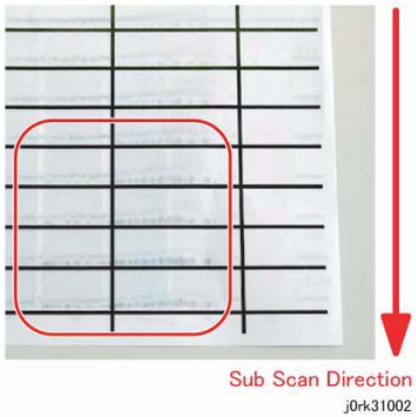

Figure 3 j0rk31002

- Heat Haze/Mock Heat Haze (Halftone Image)

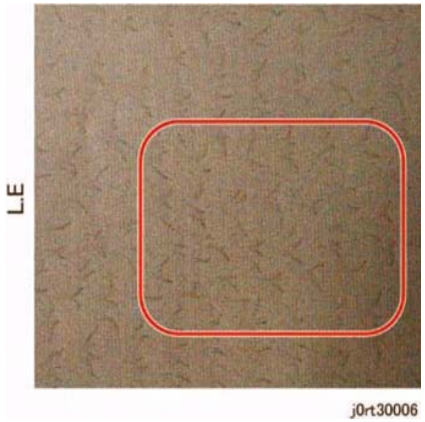

Figure 4 j0rt30006

[Cause]

Heat Haze occurs when paper is separated from the IBT BELT, scattering of toner can be seen all around the hazy Solid Patch. Figure1,2

Mock Heat Haze (Line/Text Image) occurs when toner scatters due to electrostatic charge from the friction between the paper, which is fed, and the Holder DTS (Transfer's EXIT Chute), and toner scattering at the Lead/Tail side of the Solid part. Figure1,3

Also, in Mock Heat Haze (Halftone Image), paper becomes strongly electrically charged at the minus side, and positive corona discharge occurs between the grounded Holder DTS and the paper, causing toner to scatter, and branch-like (pulsation-like) patterns can be seen along the electrical discharge portion. Figure1,4

[Procedure]

1. Sample the secondary transfer Offset Mode Chart, determine if it occurs with single K color or multi-color by changing the power voltage of the secondary transfer. Also, when increasing the power voltage of the secondary transfer, perform a 2 Sided sampling of halftone image of single K color (45) to see if the branch-like patterns change.

[Corrective action]

1. When a heat haze or mock heat haze occurs during installation, print 25 sheets of test chart, etc. on A3.

2. Increase the secondary voltage.

   Based on the results of 1., increase the power voltage of the secondary transfer. (secondary transfer power voltage user offset specifications applicable)

3. Increase the value of the primary transfer's electric current

   NOTE: *This adjustment may lead to more ghosting refer to IQ-25.Check the test pattern, if the level is unacceptable, do not perform (1) (2), or reduce the change in width at (3).*

   a. Change 745-316 (primary transfer Vh Interlock Plain K Color Reference Parameter SW) from 0 to 1*1.

      *1: The above method is unique to DC-IV C2263.

      -> Mainly effective for [Heat Haze/Mock Heat Haze].

      - Only for Duplex Side 2 of K color does electric current of primary transfer increases.If effect is not satisfactory, go to (2).

   b. Change 745-007 (primary transfer Output Control SW) from 2 to 1*2.

      *2: Depending on the product, firmware version, the initial value may be 1.

      -> Mainly effective for [Heat Haze/Mock Heat Haze].

      - Regardless of Simplex/Duplex, all the electric currents of Y/M/C/K increase.If effect is not satisfactory, go to (3).

   c. Increase the primary transfer current value. Perform the following procedures:

      Corrective action - adjusting the primary transfer current value for toner scattering (mock heat haze) around K color texts

      i. Refer to 745-002 ('Environment No.' selected according to temperature and humidity), note down the value*1.

         *1: This value indicates the machine internal environment (temperature and humidity) and it is stored as an integer value between 1 and 10. The higher the temperature and humidity are, the smaller the value becomes and vice-versa.

      ii. Based on the condition for problem occurrence (Device and Output Color + value of above (1)), change to the primary transfer electric current value (target value).

         - Refer to the following table for the NVM address to be changed.
         - The temperature and humidity inside the device fluctuates within the day, make a plus-minus change also of the value noted down at (1) (if '5', then 4 and 6).

- The value to change:
  - Environment No. 1-6@P/S 126mm/s: 97->107,
    Environment No. 7-10@P/S 126mm/s: 107->117,
  - Environment No. 1-6@P/S 63mm/s: 53->58,
    Environment No. 7-10@P/S 63mm/s: 53->58,

Example) This problem occurs at 126mm/sPlain Paper Mode Monochrome, and if 745-002 is '9', change 745-167, 745-171, 745-175 from 107->117.

Table 1

		745-002 (Environment No.)									
		1	**2**	**3**	**4**	**5**	**6**	**7**	**8**	**9**	**10**
Y	126	745-136	745-140	745-144	745-148	745-152	745-156	745-160	745-164	745-168	745-172
	63	745-096	745-100	745-104	745-108	745-112	745-116	745-120	745-124	745-128	745-132
M	126	745-137	745-141	745-145	745-149	745-153	745-157	745-161	745-165	745-169	745-173
	63	745-097	745-101	745-105	745-109	745-113	745-117	745-121	745-125	745-129	745-133
C	126	745-138	745-142	745-146	745-150	745-154	745-158	745-162	745-166	745-170	745-174
	63	745-098	745-102	745-106	745-110	745-114	745-118	745-122	745-126	745-130	745-134
K	126	745-139	745-143	745-147	745-151	745-155	745-159	745-163	745-167	745-171	745-175
	63	745-099	745-103	745-107	745-111	745-115	745-119	745-123	745-127	745-131	745-135
Default Value		126mm/s: 97, 63mm/s: 53						126mm/s: 107, 63mm/s: 53			
After Change		126mm/s: 107, 63mm/s: 58						126mm/s: 117, 63mm/s: 58			

- After changing the NVM, and performing test print, refer to 745-032035 (126mm/s primary transfer last output value saved*2, 745-028031 (63mm/s primary transfer last output value saved*2, and check that the primary transfer output has been changed.

  *2: The last output electric current value of each color is stored.

  -> Effective for [Heat Haze/Mock Heat Haze].

4. Decrease the TC by 1%. Delta ATC target manual correction amount
   a. DC-IV C2263
      - K Color 1% Down...752-741: 0 -> 35
      - Y Color 1% Down...752-738: 0 -> 35
      - M Color 1% Down...752-739: 0 -> 35
      - C Color 1% Down...752-740: 0 -> 35

        -> If changed, the target value of MAX Setup/Toner Density Adjustment will also shift to 35.

        NOTE: *ATC Target Leading Correction Amount Code*
        - *Plus: TC Down*
        - *Minus: TC Up*

   b. DC-IV C2260
      - K Color 1% Down...752-792: 0 -> 35
      - Y Color 1% Down...752-789: 0 -> 35
      - M Color 1% Down...752-790: 0 -> 35
      - C Color 1% Down...752-791: 0 -> 35

        -> If changed, the target value of MAX Setup/Toner Density Adjustment will also shift to 35.

        NOTE: *ATC Target Leading Correction Amount Code*
        - *Plus: TC Down*
        - *Minus: TC Up*

CAUTION

Occurrence of both heat haze and mock heat haze are easily influenced by the paper orientation. As final step, copy an image which have solid portions located at various positions to check for them. Especially for the secondary voltage offset chart, only one patch in the area is useful because the Secondary Transfer voltage changes between Lead and Tail edges.

IQ51 Heat Haze/Mock Heat Haze - TBD - Northwood RAP for Refererence Only

The heat haze/mock heat haze is generated in various places and in different ways.

The heat haze occurs at the place where paper is peeled off from the Transfer Belt as shown in Figure 1.
The toner scatters in small clouds around the Solid Patch.

The mock heat haze occurs when the transported paper rubs against the Holder DTS (Chute at the Transfer EXIT) as shown in the figure, which charges it electrically and causes the toner to scatter at the Lead and Tail edges of the Solid section. This might form streaks in some parts.

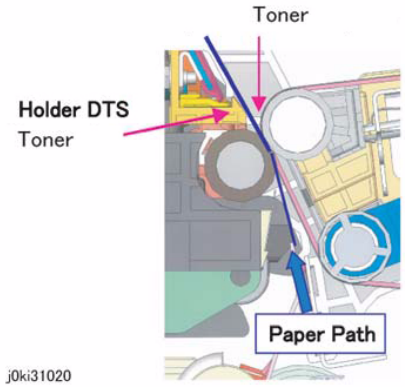

Figure 1 Heat Haze/Mock Heat Haze

Initial Actions

1. Obtain the Chart for Secondary Transfer Voltage Offset Mode to check whether the defect occurs for single K color or multi colors and whether it changes at the secondary voltage.

   CAUTION

   Perform paper (Tray) selection and paper type selection.

2. Adjust Toner Density. Perform checking. If the TC is higher after the installation, lower the TC.

Procedure

1. When a heat haze or mock heat haze occurs during installation, print 25 sheets of test chart, etc. on A3.
2. Increase the secondary voltage.

   Increase the secondary voltage based on the result of 1. (Secondary voltage offset)

   → This is mainly effective for heat haze.
3. Increase the primary transfer current value. Perform the following procedures:

   Corrective action - adjusting the primary transfer current value for toner scattering (mock heat haze) around K color texts

a. Refer to NVM Read/Write (dC131) location 746-015 (the Environment No. selected based on temperature and humidity) and take note of that value *1.

*1: This value indicates the machine internal environment (temperature and humidity) and it is stored as an integer value between 1 and 10. The higher the temperature and humidity are, the smaller the value becomes and vice versa.

b. Change the primary transfer current value (approximate) to the value corresponding to the conditions at which the problem occurs (Model & Output Color + the value in (1) above).

- Refer to the following table for the NVM address to be changed. (Table 1)
- Because the machine internal temperature and humidity changes slightly within the day, also change the values before and after the value that was taken note in (1) above (if the value is "5", change "4" and "6" too).
- Change 103 to 150 for 25/25ppm, 148 to 200 for 35/35ppm, (TBD) for 45/45ppm, or (TBD) for 50/55ppm.

Example) If this problem occurs for 25/25ppm Full Color print and NVM location 746-015 is a value of "9", change NVM locations 745-405, 406, and 407 from a value of 103 to a value of 150.

Table 1 NVM Address

		746-015 (Environment No.)									
		1	**2**	**3**	**4**	**5**	**6**	**7**	**8**	**9**	**10**
25/25ppm	FC	745-398	745-399	745-400	745-401	745-402	745-403	745-404	745-405	745-407	745-408
	BW	745-408	745-409	745-410	745-411	745-412	745-413	745-414	745-415	745-416	745-417
35/35ppm	FC	745-448	745-449	745-450	745-451	745-452	745-453	745-454	745-455	745-456	745-457
	BW	745-458	745-459	745-460	745-461	745-462	745-463	745-464	745-465	745-466	745-467
45/45ppm	FC	745-498	745-499	745-500	745-501	745-502	745-503	745-504	745-505	745-506	745-507
	BW	745-508	745-509	745-510	745-511	745-512	745-513	745-514	745-515	745-516	745-517
50/55ppm	FC	754-548	754-549	754-550	754-551	754-552	754-553	754-554	754-555	754-556	754-557
	BW	754-568	754-569	754-570	754-571	754-572	754-573	754-574	754-575	754-576	754-577
Initial Value		103		148		169		193		216	
After Change		150		200		220		250		280	

c. Perform a to b. After performing the test print, refer to NVM Read/Write (dC131) location 746-005 (1st BTR Transfer Bias Last Output Value K) *2 to check that the primary transfer output has changed.

*2: This stores the current value that was output last. In the case of 25/25ppm, 103 (10.3MicroAmp) is stored before the adjustment and 150 (15.0MicroAmp) is stored after the adjustment.

NOTE: *This adjustment may result in worse ghosting (residual image due to electrostatic record on the photoreceptor).*

Print and check a test pattern. If the level is bad, decrease the value in (2) above.

→ This is effective for heat haze/mock heat haze.

4. Decrease the TC by 1%. Δ ATC target manual correction amount

Decrease K color by 1%. 752-845: 0 → 35

Decrease Y color by 1%. 752-842: 0 → 35

Decrease M color by 1%. 752-843: 0 → 35

Decrease C color by 1%. 752-844: 0 → 35

→ When the value is changed, the target value for MAX Setup (ADJ 9.16)/Adjust Toner Density also shifts by 35.

CAUTION

Occurrence of both heat haze and mock heat haze are easily influenced by the paper orientation. As final step, copy an image which have solid portions located at various positions to check for them. Especially for the secondary voltage offset chart, only one patch in the area is useful because the Secondary Transfer voltage changes between Lead and Tail edges.

IQ 33 Bleeding/Blurred Image on Heavyweight Paper

When the trail edge of paper exits the Regi Chute, the paper jumps up and comes close to the Intermediate Transfer Belt. The discharge phenomenon at the 2nd-transfer pre-nip area causes part of the image area approx. 23mm from the trail edge, along the shaft to be blurred (toner scatter).

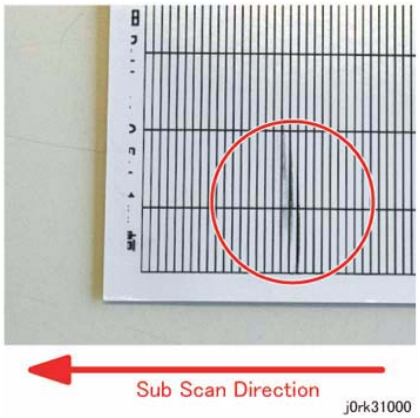

Figure 1 Bleeding/Blurred Image

This problem occurs with stiff paper like heavyweight paper.

Procedure

1. Check that toner on the image bleeds like a smear or toner scatters like a blur at the area approx. 23mm from the trail edge of paper.

   Ref.:

   a. An overall halftone image or an image with lines in the SS direction is helpful to detect this phenomenon.

   b. This problem is apt to occur in the Monochrome mode.

   c. This problem is apt to occur when the trail edge of paper curls up.
2. Forcibly curl down the trail edge of paper (by approx. 10mm).
3. Change the paper feed direction. (E.g.: A4S -> A4)
4. Turn the paper face down.

   NOTE:

   - *Turning the paper so that the grain is perpendicular to the paper feed direction will alleviate the problem.*
   - *The paper left in a tray in a low-temperature and low-humidity environment may curl up. So loading the paper face down will alleviate the problem.*

IQ 34 Kiss Mark

The system resistance in the 1st-transfer area increases, causing the voltage applied for 1st transfer to increase. As a result, a charge is injected into toner on the photoreceptor, thus causing a kiss-mark-shaped discharge mark to appear.

Figure 1 Kiss Mark

A toner cloud enters the IBT Unit, contaminating the 1st BTR or the IBT Belt.

Procedure

1. Sample an overall halftone image for each of the colors in order to check with which color (engine) and where (at front, rear, etc.) in the SS direction the problem has occurred.
2. Clean the 1st BTR for the problem color. (Wiping with dry cloth is recommended.)*1
3. Reduce the 1st-transfer current for the problem color. *2

   To learn in which NVM Chain-Link No. to change the setting, refer to the table in IQ 32.

   Values to be changed:

   - Envi. No. 1~6@P/S 126mm/s: 97 -> 87; Envi. No. 7~10@P/S126mm/s: 107 -> 97
   - Envi. No. 1~6@P/S 63mm/s: 53 -> 48; Envi. No. 7~10@P/S 63mm/s:53 -> 48

   NOTE:

   - **1: If the drum cleaner is used to clean the 1st BTR caked with toner, dry the IBT Belt fully before installing it.*
   - **2: Reducing the 1st transfer current value makes deletions appear easily. So take care in doing so.*

IQ 35 Semicircle Seal

When paper is stripped in the 2nd-transfer area, toner particles unfused on the paper scatter in a semi-arc.

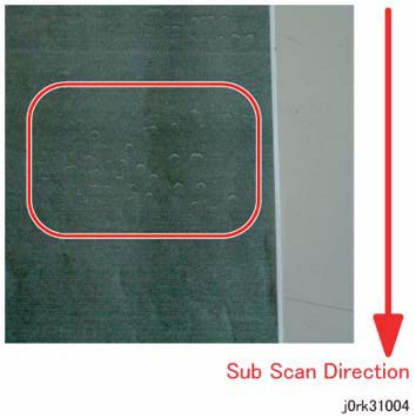

Figure 1 Semicircle Seal

A less toner charge causes this problem. If removal of electricity from paper is imperfect, this problem is apt to occur.

Procedure

1. Sample an overall halftone image (dC612) and compare it with the image quality sample.
2. Reduce the TC.

   The values to be changed: K (752-792): 0 -> 35; Y (752-789): 0 -> 35; M (752-790): 0 -> 35; C (752-791): 0 ->35
3. Increase the 1st-transfer current. *1

   To learn in which NVM Chain-Link No. to change the setting, refer to the table in IQ 32. Envi. No.1~6@P/S 126mm/s: 97 -> 107; Envi. No. 7~10@P/S126mm/s: 107 -> 117; Envi. No. 1~6@P/S 63mm/s: 53 -> 58; Envi. No. 7~10@P/S 63mm/s: 53 -> 58
4. Increase the paper loop amount. (Reduce Fuser H/R Speed.) *2

   Values to be changed:
   - Plain Paper A~G (744-382, 744-383): 10046 -> 10066
   - Plain Paper S (744-384): 9994 -> 10016

   NOTE:
   - **1: Increasing the 1st-transfer current value will cause ghosts to appear easily. Take care in doing so.*
   - **2: Changing Fuser H/R Speed may cause paper wrinkles, wetting, caterpillar marks, etc. Take care in doing so.*

IQ 36 Reverse Cracks

A phenomenon that (multiple) partially dark streaks appear in the FS direction on part of the K-colored solid patch.

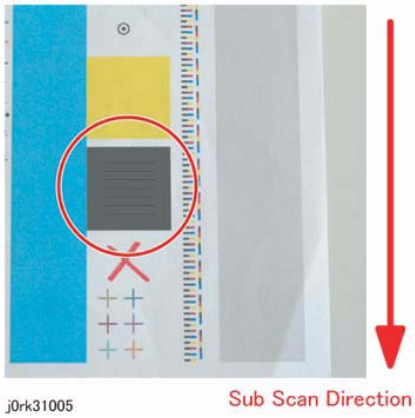

Figure 1 Reverse Cracks

The developing capacity declines, causing the density of the solid patch to lower and Vdeve to increase.

Procedure

1. Sample an image including a solid patch, such as Total Chart, and compare it with the image quality sample.
2. Increase the TC.

   Values to be changed: K (752-792): 0 -> -35; Y (752-789): 0 -> -35; M (752-790): 0 -> -35; C (752-791): 0 -> -35
3. Increase the 1st-transfer current. (*1)

   To learn in which NVM Chain-Link No. to change the setting, refer to the table in IQ 32.

   Values to be changed:
   - Envi. No. 1~6@P/S 126mm/s: 97 -> 107; Envi. No. 7~10@P/S126mm/s: 107 -> 117
   - Envi. No. 1~6@P/S 63mm/s: 53 -> 58; Envi. No. 7~10@P/S 63mm/s: 53 -> 58

   NOTE: **1: Increasing the 1st-transfer current value will cause ghosts to appear easily. Take care in doing so.*

IQ 37 Ghosting

In DC Charge the capacity of charging is less than that in AC Charge, so a ghosting problem may be worse depending on the environment, paper, etc.

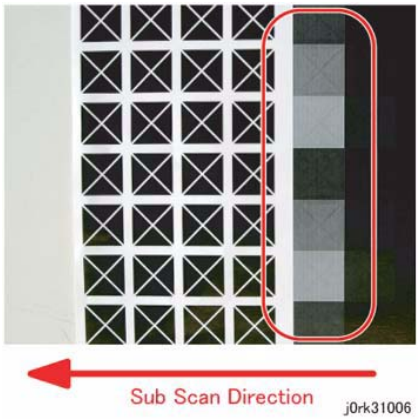

Figure 1 Ghosting

With a halftone area existing one cycle of the drum (94mm) after the exposure of text, a solid pattern, etc. to light, if the capacity of charging is not enough to eliminate what was previously transferred, the voltage at the halftone area drops, causing the density there to be higher than on its surrounding area. As a result, the previous image appears to remain on the halftone area. If VH lowers to a certain level or below under a special condition, the halftone image quality may rapidly be poor.

Procedure

1. Check that the pattern that exists 94mm before is seen in the process direction on the halftone image.
2. Reduce the 1st BTR setting, and the problem will slightly be improved.

   NOTE: *The NVMs and the procedure for setting are the same as for IQ 32.*

   - The recommendable upper limits of the setting: at Full Speed: Envi. No. 1~6 on the table: 0.5 micro A; No. 7~10: 1.0 micro A; at Half Speed: all Envi. Nos.: 0.5 micro A
   - At Full Speed: No. 1~6: the current value - (minus) 5

     Envi. No. 7~10: the current value - (minus) 10
   - At Half Speed: all Envi. Nos.: the current value - (minus) 5

NOTE: *The above setting may cause defects such as BCO, Heat Haze/Mock-Heat Haze, Caterpillar Mark and Semicircle Seal to appear easily. Besides, reducing the setting more than recommended will cause a transfer failure.*

IQ 38 Cracks

A phenomenon unique to DC charge by the BCR

Basically, charge by the BCR is done at pre-nip. After that, the photoreceptor and the BCR contact each other, thereby disturbing the charged surface. As a result, minutely uneven charge may occur, sometimes causing microstreaks to appear at random along the shaft. A streak is approx. some mm. long. A dark one may sometimes appear depending on the place. This is different from BCR Pitch (38mm) or Photoreceptor Pitch (94mm).These cracks are apt to appear on the halftone area after the machine takes a rest in a high-temperature and high-humidity environment. Besides, they are more visible on heavyweight paper than on plain paper.

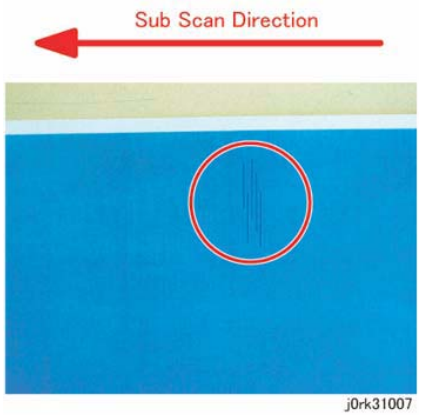

Figure 1 Cracks

Minutely uneven discharge unique to DC charge by the BCR. (mainly halftone image quality)

Procedure

Check that microstreaks appear at random along the shaft on the halftone area. (Take care not to mistake this for banding.)

1. In all the following NVMs, change to the recommended values each.

   For the Y, M and C engines, change only the NVMs for them. For the K engine, change the NVMs for K.

   - CF Upper Limit YMC 753-237: 110 -> 120 (recommended)
   - CF Upper Limit K 753-238: 110 -> 120 (recommended)
   - CF Lower Limit YMC 753-239: 100 -> 110 (recommended)
   - CF Lower Limit K 753-240: 100 -> 110 (recommended)

   - Correction CF Upper Limit-Lower Limit YMC 753-241: 110 -> 120 (recommended)
   - Correction CF Upper Limit-Lower Limit K 753-242: 110 -> 120 (recommended)
   - Correction CF Upper Limit-Upper Limit YMC 753-243: 110 -> 120 (recommended)
   - Correction CF Upper Limit-Upper Limit K 753-244: 110 -> 120 (recommended)

- Correction CF Lower Limit-Lower Limit YMC 753-245: 100 -> 110 (recommended)
- Correction CF Lower Limit-Lower Limit K 753-246: 100 -> 110 (recommended)
- Correction CF Lower Limit-Upper Limit YMC 753-247: 100 -> 110 (recommended)
- Correction CF Lower Limit-Upper Limit K 753-248: 100 -> 110 (recommended)

NOTE: *This setting may cause BCO to occur easily. Besides, at half speed or at low rate of image area coverage, the drum may squeak.*

2. Perform the ProCon Setup to reflect the above cleaning field settings.

   *To reflect the above settings may require some executions of the ProCon Setup.

3. In the following NVMs, check the current CF Upper and Lower Limits to verify the above settings are reflected.
   - Correction CF Upper Limit Y 751-249=120 (in the case of the above recommendation)
   - Correction CF Upper Limit M 751-250=120 (in the case of the above recommendation)
   - Correction CF Upper Limit C 751-251=120 (in the case of the above recommendation)
   - Correction CF Upper Limit K 751-252=120 (in the case of the above recommendation)

   - Correction CF Lower Limit Y 751-253=110 (in the case of the above recommendation)
   - Correction CF Lower Limit M 751-254=110 (in the case of the above recommendation)
   - Correction CF Lower Limit C 751-255=110 (in the case of the above recommendation)
   - Correction CF Lower Limit K 751-256=110 (in the case of the above recommendation)

IQ 39 1.9mm Banding

A lighter/darker area appears at cycles of 1.9mm.

Basically this problem occurs across paper, but there may be differences in level in the IN-OUT direction.

There may also be differences in level in the paper feed direction. This is more visible in black, but occurs even in color. The problem is apt to be worse in a high-temperature and high-humidity environment.

Figure 1 1.9mm Banding

The cause is the vibration of the Mag. Roll caused by the engagement of the Developer Unit driving gears.

This has an effect on changes of the speed of the photoreceptor.

Procedure

1. Using the internal pattern (dC612), make a halftone print (Cin 50%) for the color with which banding occurs.
2. Measure the total length of some banding streaks. Divide the length by the number of the streaks and check that they occur at intervals of 1.9mm pitch.
3. Replace the CRU (only the Developer Unit is OK) for the color with which banding occurred.
4. The problem still persists, replace the machine gear.

   (PL 5.1 Dispenser Drive Gear Assembly)

Ref.: Banding Pitch

- 9.6mm: The Mag. Roll group is the cause. At cycles of 1/3 (one-third) of one rotation of the Mag. Roll

- 29.8mm: at cycles of one rotation of the Mag. Roll

IQ 40 Paper Wrinkles due to Interaction

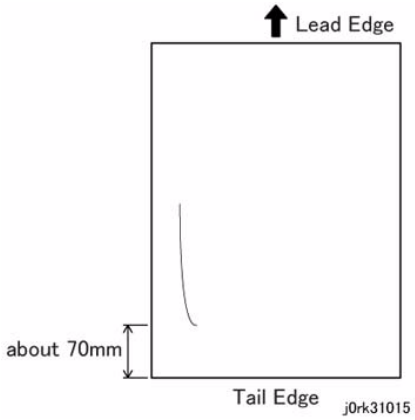

Figure 1 Wrinkle

The positional relation of a roll at each sublevel with the Fuser is inappropriate, causing paper to skew. As a result, paper wrinkles at Fuser.

Initial Actions

1. Compare the form of the paper wrinkle with the image quality sample.
2. If the following conditions are met, suspect this is a paper wrinkle due to interaction.
   - This occurs on A3 or B4 paper. (It does not occur on small paper.)
   - This occurs either at front or at rear only.
   - This occurs on the latter half of paper.
   - This does not occur approx. 70mm or farther from the trail edge.
   - This occurs in the form of a convex on the image side.

Procedure

1. Removing and installing the Adjusting Bracket
   a. Remove the Fuser.
   b. Remove the screw on this side from the Adjusting Bracket at front.

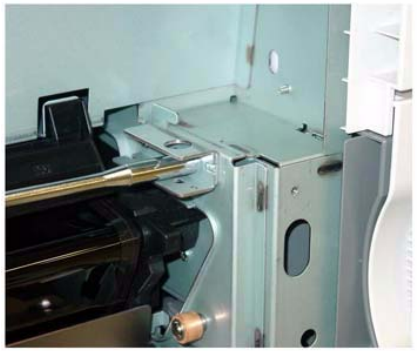

j0rk31009

Figure 2 Removing Bracket

2. Assembling the Adjusting Bracket
   a. Bracket Components
      - At factory + -0mm): the marked “N”

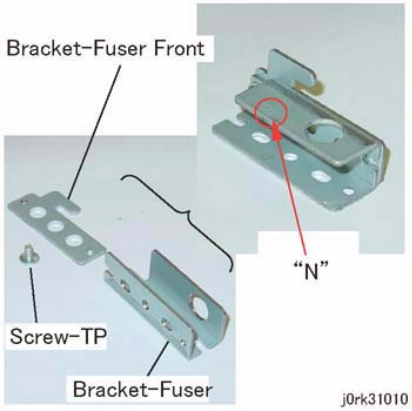

j0rk31010

Figure 3 Bracket N location

   b. According to the case, assemble the Bracket-Fuser Front and the Bracket-Fuser so that the side with the appropriate mark (N, M or P) faces up.
      - In the state of minus (-0.5mm): the marked “M”
      - In the state of plus (+0.5mm): the marked “P”

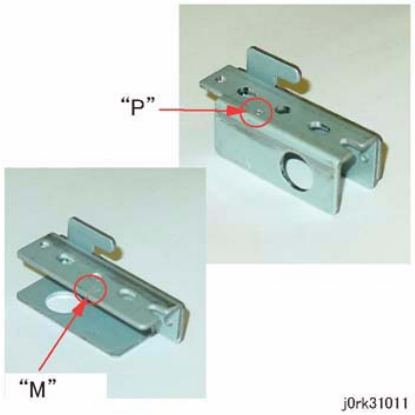

j0rk31011

Figure 4 Bracket M & P locations

3. Adjusting
   a. If a paper wrinkle appears at front, use “P.”

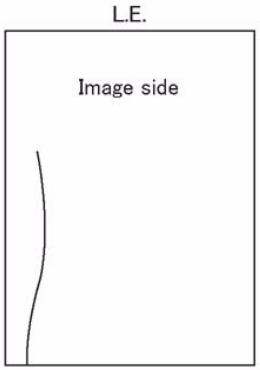

j0rk31012

Figure 5 Wrinkle at front

   b. If a paper wrinkle appears at rear, use “M.”

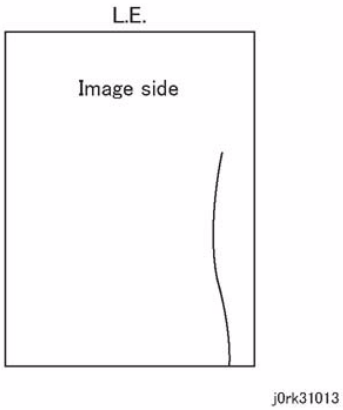

Figure 6 Wrinkle at rear

4. Flowchart for Use of the Alignment Adjusting Bracket (Figure 7).

   NOTE: *Use this when a paper wrinkle due to interaction has occurred.*

   a. Paper Wrinkles due to Interaction
      - Paper wrinkles due to the interaction between Fuser and Transfer and Regi.
      - Cause: The positional relation of a roll at each sublevel with the Fuser is inappropriate, causing paper to skew. As a result, paper wrinkles at the Fuser.

   b. Sampling
      - Paper: A3SEF
      - Pattern: Half Tone K50%
      - Paper Qty.: Simp 5 sheets

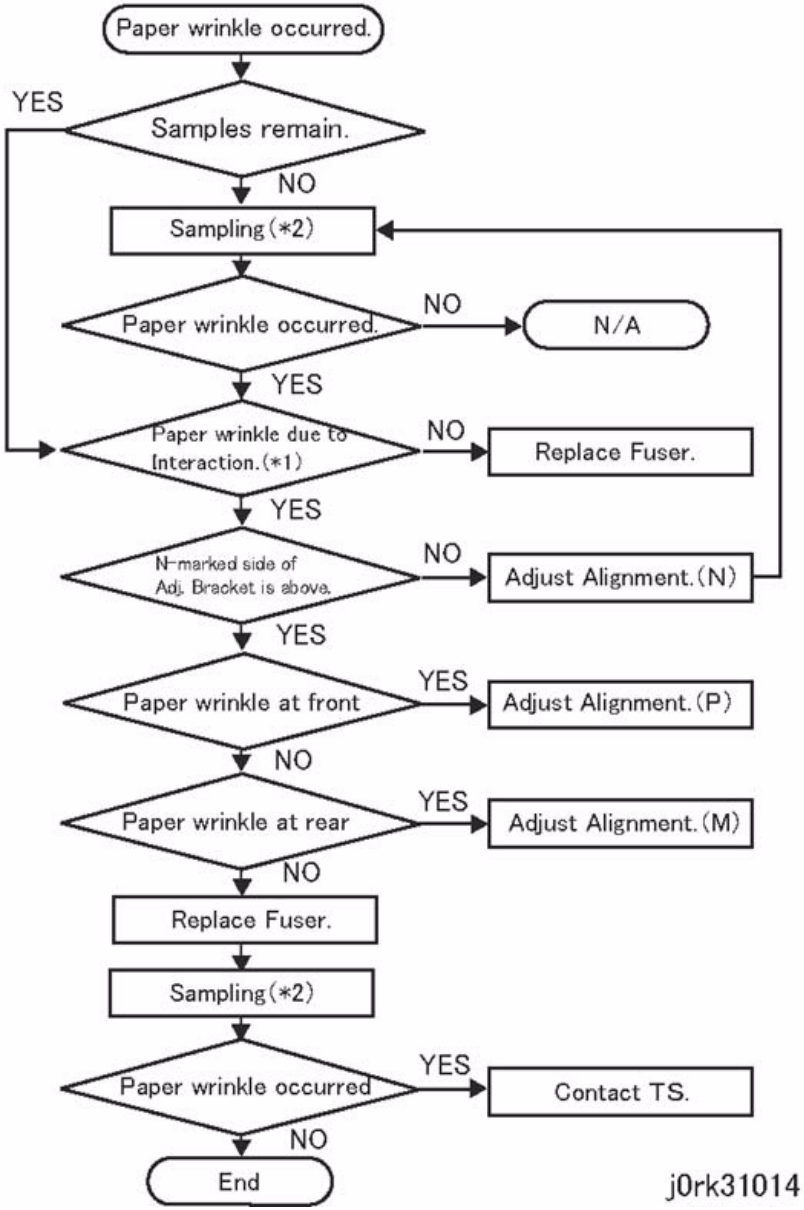

Figure 7 Wrinkle Flowchart

IQ 41 Low Image Density - TBD

This RAP troubleshoots the causes of output images with low density

Initial Actions

- Clean the ROS window
- Replace the paper in use with fresh, dry paper of the correct specification
- Determine if the Drum Cartridge or any of the Toner Cartridges are approaching end-of-life. Replace if necessary.
- **Review TBD - what process replaces this.** Perform Max Setup (ADJ 9.1). If this does not resolve the problem, continue with this RAP.

Procedure

Print Test pattern 59 (dC612) for each color (C,M, Y, K) at 40%. **The defect involves a single color.**

Y N

Print Test pattern 59 using Cyan 40%. Open the Front Door in the middle of the print job (approximately 7 seconds after selecting Start). Remove the Transfer Belt Assembly. **There is a good toner image on the Transfer Belt.**

Y N

- Go to BSD 9.15 - Image Transfer to Transfer Belt to check the circuit to the 1st BTR.
- Go to BSD 9.5 - Charging & Exposure to check the circuit to the BCRs
- Replace the HVPS (PL 18.1).
- Replace the IBT Assembly (PL 6.1).

Check the 2nd BTR for damage or incorrect installation (BSD 9.16 - Image Transfer to Paper). If the problem continues, replace 2nd BTR Assembly (PL 6.1).

- Check the Toner delivery path for blockage, loose connections, etc. (BSD 9.11 - Toner Dispense Control).
- Replace the Toner Cartridge for the problem color (PL 5.1).
- Replace the Drum Cartridge for the problem color (PL 8.1).
- Replace the HVPS (PL 18.1).

IQ 42 Repeating Bands, Streaks, Spots, and Smears

Initial Actions

Check customer print to verify Repeating Bands, Streaks, Spots, and Smears

Procedure

Measure the distance between the repeating defects. Repair Actions for the most common causes are shown in Table 1. Tables 2 through 6 give pitch values for all components. Table 7 and Figure 1 show the physical relationships

Table 1 Repeating Defects

Repetition spacing	Component(s)	Repair Actions
<4 mm	High Frequency Banding	
95 mm	Photoreceptor	Single Color - Replace the Drum Cartridge (see CRUs and Consumables in Section 6).
38 mm	BCR	Single Color - Replace the Drum Cartridge (see CRUs and Consumables in Section 6).
29 mm	Developer Mag Roll	Single Color - Replace the Drum Cartridge (see CRUs and Consumables in Section 6).
84 mm	Fuser Heat Roll	Ensure correct paper type is set for the actual paper in the paper tray. Remove the Fuser Assembly. Check the Heat Roll for damage (nicks, wear, or cuts) or contamination. Clean or replace as required (PL 7.1).
94 mm	Fuser Pressure Belt	All Colors - Remove the Fuser Assembly. Check the Heat Roll for damage (nicks, wear, or cuts) or contamination. Clean or replace as required (PL 7.1).
25mm	BTR 1 Roll	Check the Drive Roll Assembly for damage or contamination. Clean, repair or replace as required (PL 6.2).
56 mm	BTR 2 Backup Roll BTR 2 Roll	Check the 2nd BTR Assembly for damage or contamination. Clean, repair or replace as required (PL 6.1). Replace the Transfer Belt (PL 5.3).
72 mm	IBT Drive Roller	Check the Drive Roll Assembly for damage or contamination. Clean, repair or replace as required (PL 6.2).

Pitch

Table 2 IBT

Name	Diameter	Pitch
D/R	22.52	70.75
I/R	12	37.70
1st BTR	8	25.13
S/R	12	37.70
T/R	18	56.55
BUR	18	56.55
Transfer Belt	253	794.84
2nd BTR	18	56.55

Table 3 Fuser

Name	Diameter	Pitch
Belt	30.1	94
Heat Roll	26.32	84
Exit Roll	11.9	37.38
Dec. Shaft	8	25.13

Table 4 Developer (Ratio to Circumference Velocity: 1.75 times)

Name	Diameter	Pitch
Mag Roll	16	29

Table 5 XERO

Name	Diameter	Pitch
Photoreceptor	30	95
BCR	12	38
BCR Cleaner	10	31.42
Auger	8	25.13

Table 6 Paper Feed

Name	Diameter	Pitch
Registration Roll	20.08	63.05
#1TA Roll	15	47.1
#2TA Roll	15.13	47.5
EXIT1	15	47.1
EXIT2	15	47.1

The Position of the Components around Xerographic Cartridge

Table 7 Components positions

	Angle	Distance
Base	0 deg.	0
1st BTR	10 deg.	2.62
ERASE	76 deg.	19.90
BLADE	108 deg.	28.27
BCR	161.64 deg.	42.32
ROS	188.65 deg.	49.39
Developer	238 deg.	62.31

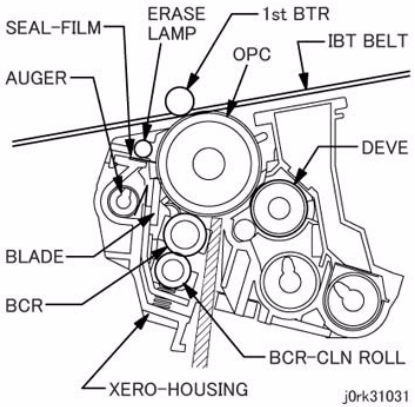

Figure 1 Drum Cartridge

Image Quality Specifications

The following steps are used to set up the machine for the purpose of making test pattern copies to judge output image color density, balance, and registration.

1. Set the following Customer Mode Settings to the positions listed:
   a. Output Color - Full Color
   b. Original Type - Photo & Text / Halftone
   c. Lighter/Darker - Auto Contrast
   d. Variable Color Balance - Normal
   e. Color Saturation - Normal
   f. Sharpness - Normal
2. Place the Color Test Pattern on the platen. Load 11” X 17 or A3 paper into Tray 1. Make a copy of the test pattern.
3. Compare the copy to the test pattern. Refer to Figure 2 and Table 1 for this evaluation.

Table 1 Color Specifications Check Locations

AREA (Fig. 2)	Check for the Following Results
A	Text Reproduction. Each of the seven sentences in this area are fully reproduced with no missing letters or portions of letters. The sentences are reproduced in Black, Cyan, Magenta, Yellow, Red, Green and Blue.
B	Color Registration. The patterns in location B should be properly registered to provide Black, Red, Green and Blue lines.
C	Front to Rear Density. The density of both the low density and high density bands should be uniform from front to rear. This can be tested by folding the copy in the center and comparing the front side of the copy to the rear side of the copy at location C. Both the high density and low density locations should exhibit even front to rear density.
D	Color Gradation. This area should exhibit a decreasing density of each of the colors from 100% density to 5% density. In a properly adjusted machine, the 10% patches should be visible and the 5% patches should be barely visible or not visible on the test pattern copy (except for the bottom row).
E	Routine Color. Location E represents three general tests for the machine to reproduce colors common to customer originals. Location A is a general skin tone test. Location B represents the color of grass or other common foliage. Location C represents the color of the sky.
F	Photo Gradation. Location F is not used for any copy quality evaluation on this product.
G	IIT Calibration Patches. These patches are scanned for IIT Calibration during the DC945 IIT Calibration portion of Max Setup.
H	100 Lines/Inch Image. A Moire defect will show on this image. Moire on a 100 Line/Inch image is within specification.
I	175 Lines/Inch Image. This image is used to test for Moire. Depending on the degree of the defect, moire seen on this image should be considered out of specification.

Registration and border deletions are checked using the Step Scales on the Geometric Test Pattern, an example of which is shown in Figure 1. All of the scales are 20mm in height, and are made up of four 5mm steps. Step 1 will be described as at the top of the Step Scale, and Step 4 will be described as at the bottom.

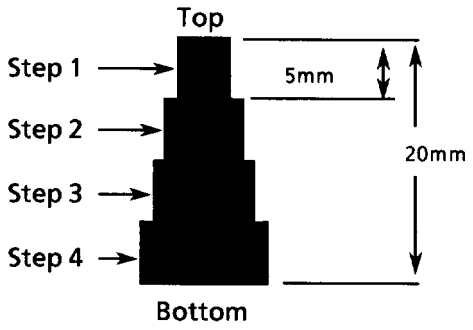

Figure 1 Step Scales

Each Step Scale is positioned for a particular paper size and orientation. Table 2 indicates the appropriate Step Scales to use for the various paper sizes, orientations and measurement locations.

Table 2 Geometric Checkout - Step Scale Data.

Paper Size	Orientation	To check:	Step Scales to use (refer to Figure 1)
11x17	SEF	Lead Edge Side Edge Trail Edge	LE1 through LE3 SE1 through SE4 (top); SE5 and SE8 (bottom) TE3
A3	SEF	Lead Edge Side Edge Trail Edge	LE 1 through LE3 SE1 through SE4 (top); SE6 and SE7 (bottom) TE4
8.5x11	SEF	Lead Edge Side Edge Trail Edge	LE 1 and LE2 SE1 through SE3 (top); SE9 (bottom) TE5
A4	LSEF	Lead Edge Side Edge Trail Edge	LE 1 and LE2 SE1 through SE3 (top); SE10 (bottom) TE6
8.5x11	LEF	Lead Edge Side Edge Trail Edge	LE1 through SE3 SE1 and 2 (bottom) SE6 and SE7 (top) TE 2
A4	LEF	Lead Edge Side Edge Trail Edge	LE1 through SE3 SE5 (top); SE1 and SE2 (bottom) TE1

1. Set the following Customer Mode Settings to the positions listed:
   - Output Color - Full Color

- Original Type - Photo & Text / Halftone
- Lighter/Darker - Auto Contrast
- Color Saturation - Normal
- Variable Color Balance - Normal
- Sharpness - Normal

2. Place Test Pattern 82E8220 on the platen and 24# Xerox Color Xpressions 11 X 17 (USCO), or 90 GSM Colortech A3 (XL) paper in Tray 1. Make a copy of the test pattern.
3. Follow the directions in Table 3 to determine if the machine registration is within specification.

Table 3 Test Pattern Image Data Locations for Geometric Specifications

GEOMETRIC AREA	CHECK PERFORMED
Magnification	Locate the 300mm line running from near LE1 to the trail edge of the 1.8 lp ladder. Locate the 200mm line running from near LE1 to near LE3. Make a copy. The measurements should be:. • Left to Right.: 300mm ±1.8mm • Front to Rear: 200mm ±1.2mm
Resolution	Observing the targets on the test pattern copy at locations R1 through R8, the line pairs specified below are clearly visible for the magnification value indicated: • 70%: 3.0 lp/mm • 100% through 400%: 4.3 lp/mm
Lead Edge Registration	Measure from the lead edge of the paper to the top of Step 3 on the LE2 Step Scale. The measurement should be: • Trays 1 through 4: 10mm ±1.5mm (±1.9mm for 2nd side of duplex job) • Tray 5: 10mm ±2.2mm
Side Edge Registration	Measure from the side edge of the paper to the top of Step 3 on the SE2 and SE3 Step Scales. The distance should be within the following tolerance: • Trays 1 through 4: 10mm ±2.0mm (±2.4mm for 2nd side of duplex job) • Tray 5: 10mm ±2.4mm
Lead Edge Skew	For skew from front to rear, the distance from the lead edge of the paper to the targets at LE1 and LE3 are measured. The measurements must match each other to within the tolerance below. • Trays 1 through 4: within ±1.5mm (±2.0mm for 2nd side of duplex job) • Tray 5: within ±2.0mm
Side Edge Skew	For skew from left to right, the distance from the side edge of the paper to the targets at SE1 and SE4 are measured. They must match each other to within the tolerance below: • Trays 1 through 4: within ±3.0mm (±4.0mm for 2nd side of duplex job) • Tray 5: within ±4.0mm
Line Density	This parameter is measured on the two 0.7G Text Blocks on the test pattern copy. The machine should reproduce all of the characters shown in the block on the output copy.
Solid Reproduction	This specifies the desired standard for reproduction of solid gray images at 1.0 K. The 1.0 K blocks on the output copy should reproduce with minimal mottle or graininess.

Table 3 Test Pattern Image Data Locations for Geometric Specifications

GEOMETRIC AREA	CHECK PERFORMED
Low Contrast Reproduction	This specifies the desired standard for reproduction of low density images. The machine should reproduce all of the text in the 0.2 G Text Blocks on the output copy.

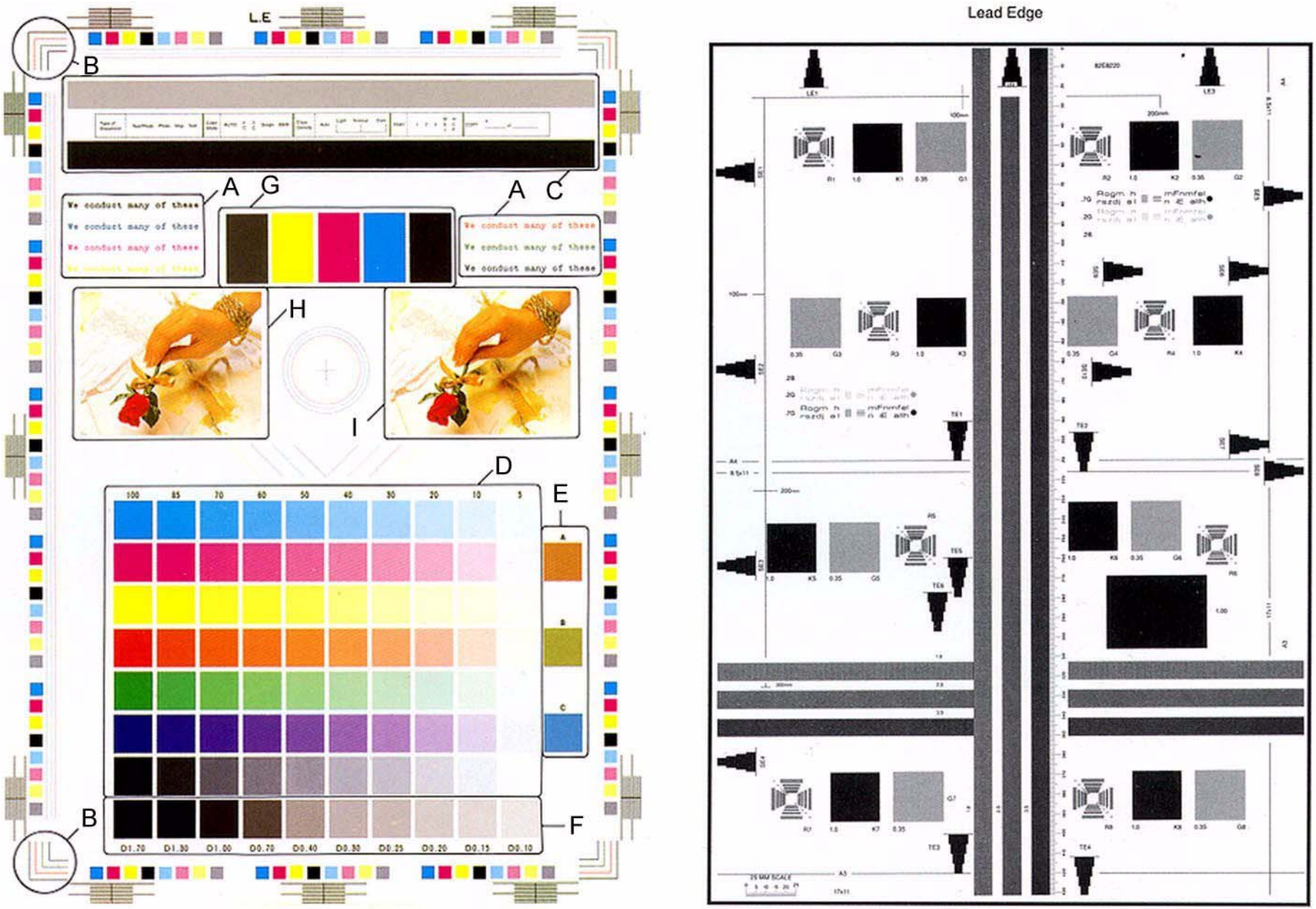

Figure 2 Color and Geometric Test Patterns

Table 1 Image Quality Restrictions and Notes

	IQ Problem Name	SUB	Description	Occurrence Conditions				Temporary Action
				Environ.	Side-1 Side-2	Media	Other Conditions	
1	Roll Marks	Fuser PH	A rubber-roll mark or a wax ingredient of toner attaches in paper running direction to some paper, caused by the switching of output tray, at duplex printing or after continuous output. Coated paper or transparencies display a strong tendency of that. (4 locations, Roll width: 2 at center: 14mm, 2 at edges: 10mm) 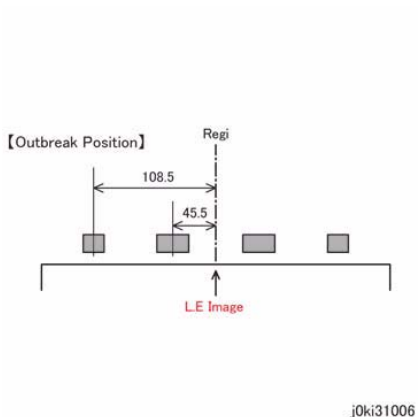 **Figure 1 j0ki31006** Registration shift of paper or backlash of the Roll causes a 2 to 3mm shift.	All	Side-1Side-2	More apparent on coated paper.		Reduce Fusing Temp by 5 degrees to alleviate the roll mark problem. (case-by-case action) When changing the temperature, note that it will cause Poor Fusing, Fuser Jam, etc. to be apt to occur with an image of high image area coverage rate. To reduce Fusing Temp by 5 degrees, change the following NVMs: • Heavy1, Coated1 (BW): 1 to 0 in 744-197 • Heavy1, Coated1 (FC): 1 to 0 in 744-200 • Heavy2, Coated2 (BW): 2 to 0 in 744-198 • Heavy2, Coated2 (FC): 2 to 0 in 744-201
2	Dew on Copy	Fuser	Water droplets may attach to paper output right after the M/C starts up.	All	-	Damp paper is stress.		Use fresh paper.
3	Corrugation Streaks	PH	Some paper exhibits a Pinch Roll mark or fine cracks in paper running direction. Special paper of a group of coated paper displays a strong tendency of that.	All		Heavy and coated paper		
4	Unlevel Side 2 of Coated Paper	Fuser	At duplex printing onto coated paper, side 2 may exhibit an unlevel image.	All	-	Coated paper		
5	Background on Coated Paper	Developer	Coated paper will have a higher level of background than standard paper.	All	All	Coated paper	-After a long rest under high humidity -When printing at a high image-area-coverage rate.	Increase the DC element of exposure bias by 10V to 20V to reduce background on Drum. (Cope with individual cases.) However, this sacrifices fine-line reproducibility and highlight reproducibility.

Table 1 Image Quality Restrictions and Notes

	IQ Problem Name	SUB	Description	Occurrence Conditions				Temporary Action
				Environ.	Side-1 Side-2	Media	Other Conditions	
6	Smear	Transfer	When the lead edge of paper enters the second transfer, the 2nd Transfer area has a momentarily increasing load, causing a change in the speed of IBT Drive Roll (speed reduction). This speed change changes the relative speed difference between the Drum surface and the IBT Belt surface at the 1st Transfer area for K color, sometimes causing a smear (toner disturbance) to occur 125mm away from the lead edge.	All		-The heavier gsm, the greater stress.-More apparent on coated paper.	BW Mode	Selecting the paper setting of Plain B / Plain E / Plain G / Heavy 1S / Heavy 2S makes IOT operate in FC Mode at monochrome printing, regardless of Controller's selection of color mode (Color preferred/BW preferred/ACS).
7	Rough Black	Transfer	On unlevel or poorly formed paper, toner is not transferred to concaves and convexes there, causing a rough transfer.		All	Unlevel or poorly formed paper		-Change the paper to level or well-formed paper. -2nd Transfer Voltage Offset Adjustment: in DC912, optimize 2nd Transfer Voltage.
8	Damp Paper Transfer Failure	Transfer	When paper is damp, it reduces its resistance. On the other hand, K color including carbon has a larger dielectric loss, so it requires a different electric field from the other colors. Therefore, the difference between paper resistance and toner resistance causes a larger difference between the electric field that multicolor transfer requires and the one that K-color transfer requires. As a result, the transfer latitude becomes narrower, causing unevenness.	High humid environ.		When running paper adapted to high humid environment (damp paper).	Apparent on K.	Use paper from an unopened package.
9	Toner Contamination at Lead/Trail Edge	Transfer	When paper that looped between transfer and fusing is released from the second-transfer nip, its trail edge moves in the reverse direction to the feed direction thereby contacting the surface of 2nd BTR or DTS HSG., or jumps up thereby contacting the belt, thus causing toner contamination.	All			2nd BTR or DTS HSG. gets unexpectedly contaminated with toner (background).	-For background suppression, extend the cleaning field (as far as fine-line reproducibility permits). -Reduce toner band (as far as density maintainability permits).
10	Trail Edge Transfer Failure	Transfer	After the trail edge of paper is released from the second-transfer nip, due to an effect of strokes for fusing, it jumps up and is retransferred to Intermediate Transfer Belt. This may cause unevenness or deletions at the trail edge (the 10mm-wide area including the margin).	All			-Paper posture gets bad-Performance limit	
11	MWS (Side2)ÅiMicroWhiteSpotsÅj	Transfer	When the resistance of the second transfer area is high, e.g., at the first operation of the day in low humidity environment, the transfer latitude between the multicolor area and the one-color area is narrow and the set voltage is in favor of multicolor transfer. Therefore, the voltage is a little excessive for one-color transfer, causing the transfer-nip discharge phenomenon. This may cause micro white spots to occur in the image on Side 2.	Low-humidity environ.	Side2 is stress.	-Unlevel paper is stress.-Paper left in low-humidity environment is stress.	The 1st operation of the day in low-temp and low-humidity environment is stress.	Trade off one-color voltage for multicolor voltage. (Reduce Second Transfer Voltage in the NVM or Second Transfer Voltage Offset Adjustment)
12	Density Change right after Power On / Environ. Change	ProCon	On the M/C with B/W Preferred selected, the 1st color output after Power ON may exhibit a color-density mismatch to some extent.	No relation	No relation	No relation		Auto Tone Adjustment

Table 1 Image Quality Restrictions and Notes

	IQ Problem Name	SUB	Description	Occurrence Conditions				Temporary Action
				Environ.	Side-1 Side-2	Media	Other Conditions	
13	Fingerprint	System	When loading paper, take care in handling it not to touch the print side. If oil or dirt from your hands attaches to the print side, it may affect a print result. To make a clean print, wear fingerstalls or gloves and take care not to let oil attach to the print side.			Coated paper in particular		Use fingerstalls or gloves.
14	Water Vapor	Fuser	When heavy paper is used in C zone, white vapors may be discharged from around the top of the LH Cover.	All	-	Damp paper is stress.		Use fresh paper.
15	Colored Streaks right before Detection of Toner Empty	Developer	When the cartridge is removed and reinstalled with toner kept to the exit so that it can be used up, short streak-like stains may appear for a while.	All	All	All		Temp Rise High Humidity Mode (Cope with individual cases) Sacrifices print speed.
16	Photoreceptor Pitch Color Streaks	Xero	Uneven density may occur on the highlight area at intervals of the photoreceptor diameter pitch.				Right after replacement of Drum Cartridge	Output tens of prints.
17	Side 2 Lead Edge Contamination	Fuser	Under the low-humidity environment, the lead edge of Side 2 of heavy paper may be contaminated.	Low - humidity environ.	Side-2	Heavy paper		
18	Side 2 Rib Streaks	Fuser	At duplex printing, printed Side 1 may exhibit rib marks in paper running direction. Special paper of a group of coated paper has a strong tendency of that.	All	Side-1	Heavy paper Coated paper		
19	Density Change at A Zone 1st Ope of Day / Replacement of Drum Cartridge/Toner Cartridge	Procon	When making the 1st sample of the day in A Zone or right after replacing Drum Cartridge or Toner Cartridge, density and gray balance may be out of spec.	Apt to occur in A zone.	No relation	No relation	Apt to occur with 1st sample of the day.	Auto Tone Adjustment
20	Crack	Xero	On some paper, sharp horizontal streaks may occur at random.	A zone is stress.		Heavy paper is stress.		Vcf Up (Change in NVM.)
21	Toner Bleeding/Blurred Image on Heavy Paper	Transfer	When the trail edge of paper exits Regi Chute, the paper jumps up and comes close to Intermediate Transfer Belt. The discharge phenomenon at the Second Transfer Pre-Nip area may cause part of the area, 23mm from the trail edge, along the shaft to be blurred (toner scatter).	All		-Heavy gsm-Stiff paper-Paper feed direction is parallel with paper grain.	-Apt to occur with K color.-Apt to occur with paper with trail edge curling up.	Curl down the trail edge of paper (by approx. 10mm).
22	Streaks from Roller	Fuser	At output to Exit 2, streaks from Roller may appear in paper running direction. Heavy paper/coated paper has a strong tendency of that.	All	Side-1Side-2	Heavy paper Coated paper		
23	Uneven Peeling	Fuser	If there is a high-density image at the trail edge of paper, gloss unevenness may occur.	All	Side-1Side-2	Damp paper or soft paper		-Use fresh paper. -Invert the image (so that there is no high-density image at the lead edge.)

Table 1 Image Quality Restrictions and Notes

	IQ Problem Name	SUB	Description	Occurrence Conditions				Temporary Action
				Environ.	Side-1 Side-2	Media	Other Conditions	
24	Toner Droplet Contamination	Developer	A stain of a droplet of toner may occur.	All	All	All	-After a long rest under high humidity.-When printing at high image-area-coverage rate.	Temp Rise High Humidity Mode (Cope with individual cases.) Sacrifices print speed.
25	Streaks on Coated Paper due to rubbing	Exit	At output of heavy coated paper A3SEF to Exit 1 in Duplex Mode, Side 1 may rub against the Exit Gate, thus exhibiting streaks.	High temp/ High humidity Environ.	Side1 (DUP)	A3 heavy coated paper	Occurs on Side 1 during duplex transport.	Change Output Tray from EXIT1 to EXIT2 TRAY.
26	Multicolor Transfer Failure	Transfer	An increase in the electric resistance of paper due to a reduced moisture content after Side 1 fusing, or an increase in the resistance of the Second Transfer area due to low humidity and aging makes it impossible to obtain the necessary electric field for an operation, especially the 1st one of the day, in low-humidity environment. This may make multicolor tones light. This is because the setting controls MWS within the limit.	Low-humidity environ.		Unlevel paper	-1st ope. of the day in low-temp and low -humidity environment.-When the inside of the M/C warms up, the phenomenon becomes less apparent or disappears.-Performance limit	Trade off for MWS. (Increase Second Transfer Voltage in the NVM or Second Transfer Voltage Offset Adjustment DC912.)
27	Color Streaks	Transfer	Paper dust may be caught between Intermediate Transfer Belt and Cleaner Blade, causing poor cleaning.	All		Paper that easily discharges paper dust, or paper with a foreign object		Change Belt Reverse Interval and Reverse Operation Duration (NVM).
28	Damage to Lead Edge of Heavy A4SEF/ 8.5"x11"SEF/B5SEF	PH	When Heavy A4SEF, 8.5"x11"SEF or B5SEF is running, the lead edge of paper may be damaged.	All	Side-1 Side-2	Heavy1, Heavy2		Change the feed direction from SEF to LEF.

Table 1 Image Quality Restrictions and Notes

	IQ Problem Name	SUB	Description	Occurrence Conditions				Temporary Action
				Environ.	Side-1 Side-2	Media	Other Conditions	
29	Smears on Heavy Paper (in continuous color mode)	PH, Trans-fer	When the trail edge of paper leaves Regi, the 2nd Trans-fer area has a momentarily increasing load, causing a change in the speed of IBT Drive Roll (speed reduction). This speed change causes a change in the speed of Photoreceptor, leading to the movement of the exposure point, thereby causing smears (toner disturbance). This occurs on the 2nd sheet and afterwards in continu-ous color mode. As to A3 SEF, this occurs 37mm from the M-color lead edge.	All		Heavier gsm causes more stress.	Color Mode	Widen the pitch between papers to prevent smear occurrence. (case-by-case action) When taking this action, note the following: produc-tivity with heavy paper in use will lower (A4 LEF 11ppm ->7ppm) and with heavy paper in use, the lives of Drum, Waste Bottle and IBT will reduce by approx. 20 to 30%. [Interval Value} 744-408: 0 -> 3107 [Change Low-Speed-Band Interval] 751-096~099: 20-> 5 [Change the type of paper to be used] • Heavy1, Coated1 744-405: 0 -> 63 • Heavy2, Coated2 744-406: 0 -> 127 (Individual paper types can be set.) If the above changes cause Drum to squeak, make the following additional changes. [ProCon Setup Interval] • 752-943~946: 50 -> 33 • 752-947~950: 100 -> 66 • 752-951~954: 40 ->25 • 752-955~958: 42 ->28

4 Repairs and Adjustments

1. Electrical
REP 1.1 Main LVPS 4-3
REP 1.2 HVPS - TBD - see note in file 4-4

3. Machine Run Control
REP 3.1 SBC Chassis Assembly 4-7
REP 3.2 HDD Assembly 4-8
REP 3.3 SBC PWB 4-9
REP 3.4 MCU PWB 4-11

4. Drives
REP 4.1 Drum Drive Assembly 4-13
REP 4.2 Main Drive Assembly 4-14
REP 4.3 Link Guide Assembly 4-15
REP 4.4 Fuser Drive Assembly 4-16
REP 4.5 Developer Drive Assembly 4-16
REP 4.6 Drum Drive Gear 4-17

5. DADF
REP 5.1 DADF 4-19
REP 5.2 DADF Platen Cushion 4-20
REP 5.3 DADF Front Cover 4-21
REP 5.4 DADF Rear Cover 4-21
REP 5.5 DADF Feeder Assembly - see TBD note 4-22
REP 5.6 DADF PWB 4-24
REP 5.7 Left Counter Balance 4-25
REP 5.8 Right Counter Balance 4-26
REP 5.9 DADF Document Tray 4-27
REP 5.10 Top Cover 4-29
REP 5.11 Harness Guide and Wire Harness 4-29
REP 5.12 DADF Registration Motor 4-31
REP 5.13 DADF Feed Motor 4-32
REP 5.14 Registration Chute 4-33
REP 5.15 Retard Chute 4-34
REP 5.16 Takeaway Roll 4-34
REP 5.17 Sensor Bracket 4-37
REP 5.18 Nudger Roll, Feed Roll - see TBD note 4-37
REP 5.19 Retard Roll 4-39

6. IIT/Scanner
REP 6.1 Platen Cushion 4-41
REP 6.2 ROS Assembly - see TBD note 4-41
REP 6.3 Platen Glass 4-43
REP 6.4 CCD Lens Assembly 4-44
REP 6.5 Front/Rear Carriage Cable 4-45
REP 6.6 LED Lamp PWB 4-48
REP 6.7 Lamp Wire Harness 4-50
REP 6.8 Light Guide 4-52
REP 6.9 Carriage Motor 4-53
REP 6.10 IIT PWB 4-54
REP 6.11 Control Panel Assembly 4-55

7. Paper Trays
REP 7.1 Tray 1 Feeder Assembly 4-59
REP 7.2 Tray 2 Feeder Assembly 4-60
REP 7.3 Tray 1 Feed/Retard/Nudger Roll 4-61
REP 7.4 Tray 2 Feed/Retard/Nudger Roll 4-61
REP 7.5 Tray 3 Feeder Assembly 4-62
REP 7.6 Tray 4 Feeder Assembly 4-63
REP 7.7 Tray 3 Feed/Retard/Nudger Roll 4-64
REP 7.8 Tray 4 Feed/Retard/Nudger Roll 4-65
REP 7.9 MSI (Tray 5) Unit 4-65
REP 7.10 MSI Feed Roll 4-66
REP 7.11 MSI Paper Size Sensor 4-67

8. Registration and Transport
REP 8.1 Registration Transport Assembly 4-69
REP 8.2 Registration Idler Gear Assembly 4-69

9. Xerographics
REP 9.1 Toner Dispense Motor Assembly 4-71
REP 9.2 Dispenser Assembly (Y, M, C, K) 4-72
REP 9.3 Dispense Drive Cover Assembly 4-73
REP 9.4 Transfer Belt Assembly - see TBD note 4-74
REP 9.5 Transfer Belt Cleaner Assembly 4-75
REP 9.6 2nd BTR Roll Assembly 4-75
REP 9.7 Transfer Belt 4-76
REP 9.8 Drum Cartridge (Y,M,C,K) 4-78
REP 9.9 CRU Reader 4-79
REP 9.10 MOB ADC Assembly - see TBD note 4-80
REP 9.11 Erase Lamp (Y, M, C, K) 4-82

10. Fusing/Post-Fuser Transport
REP 10.1 Fuser Assembly 4-85

11. Exit/OCT
REP 11.1 Exit/OCT 1 Assembly 4-87
REP 11.2 Exit 2 Assembly 4-88

12. Integrated Finisher
REP 12.1 Integrated Office Finisher 4-89
REP 12.2 Paddle Belt 4-90
REP 12.3 Sub Paddle Solenoid 4-93
REP 12.5 Staple Assembly 4-94
REP 12.6 Set Clamp Home Sensor 4-95
REP 12.7 Exit Roll Assembly 4-96
REP 12.8 Pinch Roll 4-98

REP 12.9 Finisher Entrance Sensor 4-99
REP 12.10 Compiler Exit Sensor 4-100
REP 12.11 Main Paddle Shaft Assembly 4-102
REP 12.12 Lower Chute Assembly 4-104
REP 12.13 Entrance Roll Assembly 4-106
REP 12.14 Upper Chute Assembly 4-108
REP 12.15 Finisher PWB 4-109
REP 12.16 Stacker Tray Assembly 4-110
REP 12.17 Stacker Shaft Assembly 4-111
REP 12.18 Stacker Motor 4-114
REP 12.19 Stacker Sensor 4-115
REP 12.20 Compiler Assembly 4-116
REP 12.21 Set Clamp Shaft 4-118
REP 12.22 Eject Belt 4-120
REP 12.23 Eject/Set Clamp Motor Assembly 4-121
REP 12.24 Rear Tamper Home Sensor 4-123
REP 12.25 Eject Shaft Assembly 4-124
REP 12.26 Front /Rear Tamper Motor Assembly 4-126
REP 12.27 Front Tamper Home Sensor 4-128
REP 12.28 Eject Clamp Home Sensor 4-129
REP 12.29 Stack Height Sensor 4-130

13. Office Finisher LX

REP 13.1 H-Transport Assembly (Office Finisher LX) 4-133
REP 13.2 Hole Punch Assembly (Office Finisher LX) 4-133
REP 13.3 H-Transport Belt (Office Finisher LX) 4-134
REP 13.4 H-Transport Motor (Office Finisher LX) 4-134
REP 13.5 Finisher LX Undocking 4-135
REP 13.6 Front Cover Assembly (Office Finisher LX) 4-136
REP 13.7 Rear Upper Cover (Office Finisher LX) 4-136
REP 13.8 Rear Lower Cover (Office Finisher LX) 4-137
REP 13.9 Eject Cover (Office Finisher LX) 4-137
REP 13.10 Foot Cover (Office Finisher LX) 4-139
REP 13.11 Stacker Lower Cover (Office Finisher LX) 4-140
REP 13.12 Stacker Upper Cover (Office Finisher LX) 4-140
REP 13.13 Stack Height Sensors 1 and 2 (Office Finisher LX) 4-141
REP 13.14 Sub Paddle Solenoid Assembly (Office Finisher LX) 4-141
REP 13.15 Stapler Motor (Office Finisher LX) 4-142
REP 13.16 Finisher Stapler Assembly (Office Finisher LX) 4-143
REP 13.17 Compiler Tray Assembly (Office Finisher LX) 4-144
REP 13.18 Crease Assembly (Office Finisher LX) 4-154
REP 13.19 Stacker Elevator Motor (Office Finisher LX) 4-155
REP 13.20 Stacker Tray (Office Finisher LX) 4-156
REP 13.21 Eject Belt (Office Finisher LX) 4-156
REP 13.22 Eject Motor Assembly (Office Finisher LX) 4-157
REP 13.23 Finisher PWB (Office Finisher LX) 4-157
REP 13.24 Finisher LVPS (Office Finisher LX) 4-158
REP 13.25 Eject Motor (Office Finisher LX) 4-158
REP 13.26 Front/Rear Tamper Motor (Office Finisher LX) 4-159
REP 13.27 Front/Rear Tamper Home Sensors (Office Finisher LX) 4-159
REP 13.28 Compiler No Paper Sensor (Office Finisher LX) 4-160
REP 13.29 Front/Rear Carriage Assembly (Office Finisher LX) 4-161
REP 13.30 Booklet PWB (Office Finisher LX) 4-161
REP 13.31 Booklet Maker Assembly (Office Finisher LX) 4-162
REP 13.32 Booklet Front Cover (Office Finisher LX) 4-164
REP 13.33 Booklet Rear Cover (Office Finisher LX) 4-165
REP 13.34 Booklet Top Cover (Office Finisher LX) 4-166
REP 13.35 Booklet PWB Cover (Office Finisher LX) 4-166
REP 13.36 Booklet Left Cover (Office Finisher LX) 4-167
REP 13.37 Booklet Front/Rear Stapler (Office Finisher LX) 4-167
REP 13.38 Booklet Stapler Move Motor (Office Finisher LX) 4-169

14. Covers

REP 14.1 L/H Cover Unit 4-171
REP 14.2 Duplex Assembly 4-172
REP 14.3 Top Cover 4-174
REP 14.4 Rear Lower Cover 4-175

Chain 4

ADJ 4.1 UI Diagnostic Tests 4-177

5. DADF ADJs

ADJ 5.1 DADF Lead-Skew Adjustment 4-179
ADJ 5.2 DADF Side Registration - TBD - see note 4-181
ADJ 5.3 DADF Original Detection Correction (Size Detection Auto-Correction) - TBD - see note 4-183
ADJ 5.4 DADF Lead Edge Registration 4-184

6. IIT ADJs

ADJ 6.1 Optical Axis Correction 4-187
ADJ 6.2 Full/Half Rate Carriage Position Adjustment 4-188
ADJ 6.3 IIT Lead Edge Registration 4-191
ADJ 6.4 IIT Side Registration 4-192
ADJ 6.5 IIT Vertical/Horizontal Reduce/Enlarge - TBD - see note 4-193
ADJ 6.6 IIT Calibration 4-195
ADJ 6.7 dC 608 Document Feeder Registration (Size Detection Auto-Correction) - TBD see note 4-196

Chain 7 Paper Feed

ADJ 7.1 Tray 5 (MSI) Guide Adjustment 4-197

9. Xerographic Electrical ADJs

ADJ 9.1 Max Setup 4-199
ADJ 9.2 High-Altitude Charge Correction - TBD - see note 4-199
ADJ 9.3 DC949 ATC Developer Setup 4-200
ADJ 9.4 DC991 Tone Up/Tone Down 4-200
ADJ 9.5 DC924 TRC Manual Adjustment 4-201
ADJ 9.6 DC919 Color Balance Adjustment 4-201
ADJ 9.7 DC940 ProCon On/Off Print Check 4-202
ADJ 9.8 Registration Measurement Cycle - TBD see note 4-203
ADJ 9.9 Registration Control Setup Cycle - TBD see note 4-204
ADJ 9.10 IOT Lead Edge/Side Edge Registration - TBD see note 4-205
ADJ 9.11 Edge Erase Value Adjustment 4-207
ADJ 9.12 Registration Control Sensor Check 4-207
ADJ 9.15 2nd Transfer Voltage Offset Adjustment - TBD see note 4-208

12. Finisher ADJs

ADJ 12.1 Finisher LX Hole Punch Position 4-209
ADJ 12.2 Finisher LX Booklet Crease/Staple Position 4-209

REP 1.1 Main LVPS

Parts List on PL 18.1

Removal

1. Switch off the power and disconnect the power cord.
2. Remove the following parts:
   - Rear Upper Cover (PL 19.3)
   - Rear Lower Cover (REP 14.4)
3. Remove the Main LVPS Cover. (Figure 1)
   (1) Remove the screws (x2).
   (2) Remove the Main LVPS Cover.

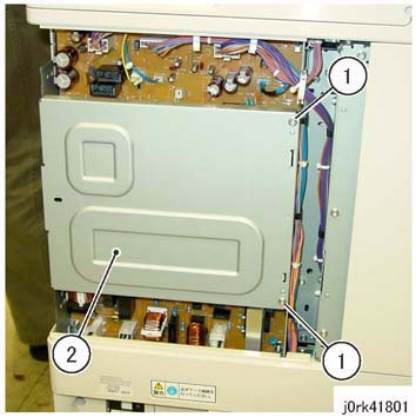

Figure 1 Main LVPS Cover

4. Disconnect the connectors (x6) of the Main LVPS. (Figure 2)
   (1) Open the clamps (x3).
   (2) Remove the clamp.
   (3) Disconnect the connectors (x6).

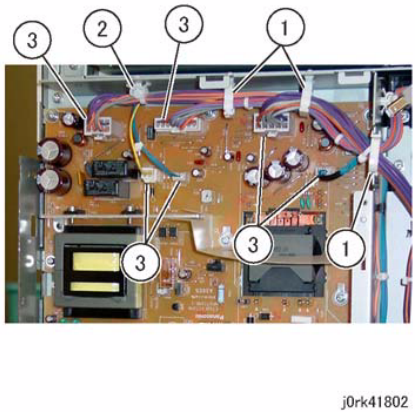

Figure 2 Main LVPS

5. Disconnect the connectors (x3) of the Main LVPS. (Figure 3)
   (1) Open the clamps (x5).
   (2) Disconnect the connectors (x3).

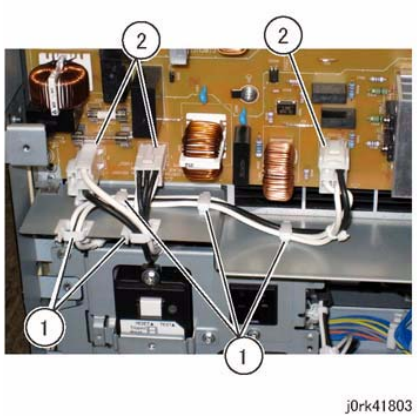

Figure 3 Main LVPS Connectors

6. Release the harness that is secured to the Frame. (Figure 4)
   (1) Remove the clamps (x3).
   (2) Release the harness.

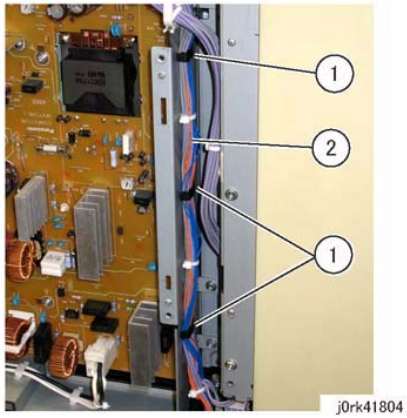

Figure 4 Main LVPS Harness

7. Remove the Main LVPS. (Figure 5)
   (1) Remove the screws (x6).
   (2) Remove the Main LVPS.

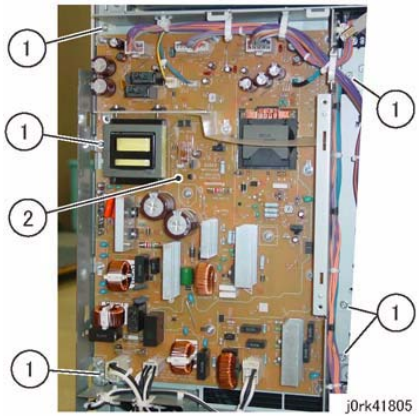

Figure 5 Main LVPS Removal

Replacement

1. To install, carry out the removal steps in reverse order.

REP 1.2 HVPS - TBD - see note in file

Parts List on PL 18.1

Removal

1. Switch off the power and disconnect the power cord.
2. Remove the Right Cover. (PL 19.3)
3. Remove the Tie Plate. (Figure 1)
   (1) Remove the screws (x4).
   (2) Remove the Tie Plate.

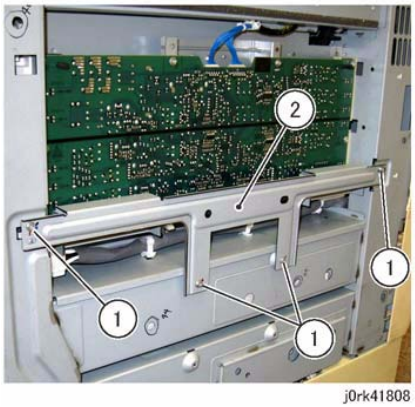

Figure 1 HVPS Tie Plate

4. Remove the HVPS. (Figure 2)

CAUTION

The HVPS is not a rigid board and can be damaged if excessively bent. Do not flex the HVPS when handling.

   (1) Disconnect the connectors (x2).
   (2) Remove the screws (x8).
   (3) Slightly push down the Clamps (2) to remove the HVPS.

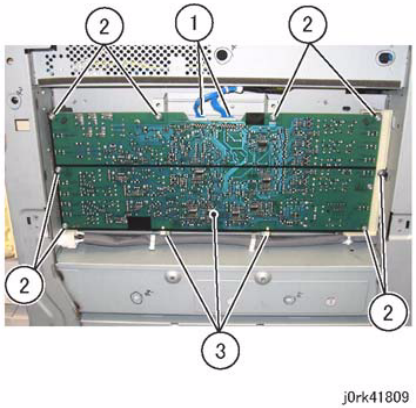

Figure 2 HVPS Connectors

Replacement

1. To install, carry out the removal steps in reverse order.
2. After replacement, perform [GP 8] Forced ADC Setup. TBD - there is no [GP 8] need input from SME.

REP 3.1 SBC Chassis Assembly

Parts List on PL 35.2

Removal

1. Switch off the power and disconnect the power cord.
2. Remove the following parts:
   - Rear Lower Cover (REP 14.4)
3. Remove the SBC Rear Cover. (Figure 1)
   (1) Open the Left Door.
   (2) Disconnect the LAN cable.
   (3) Remove the Screws (x3).
   (4) Remove the SBC Rear Cover.

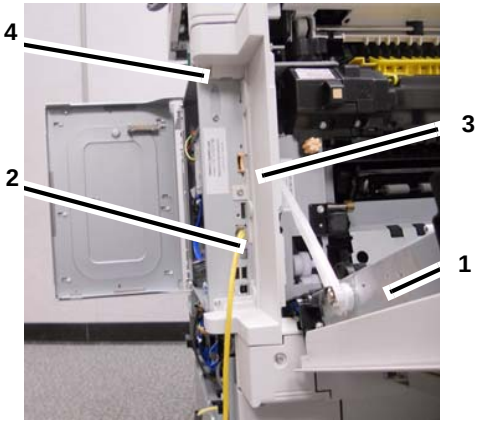

Figure 1 Removal Preparation

4. Prepare to remove the SBC Chassis. (Figure 2)
   (1) Release the clamps (x3).
   (2) Unlock to disconnect the Connector (P390).
   (3) (Do not pull out the Harness directly.)
   (4) Disconnect the connector and remove through slot in SBC Chassis.
   (5) Disconnect Connectors (x2).
   (6) Disconnect the remaining connectors (x5).

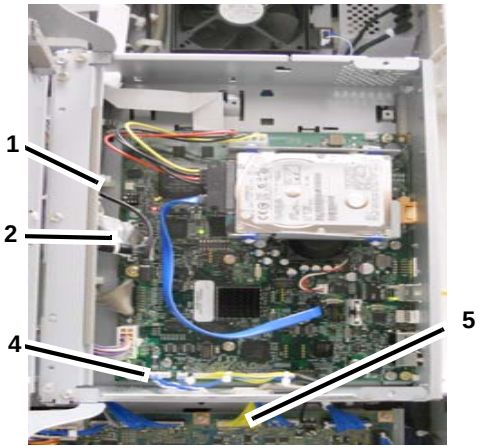

Figure 2 Removal Preparation

5. Remove the various cables through the hole of the SBC Chassis. (Figure 3)
   (1) Release the clamps (x3).
   (2) Remove the cables (x4).

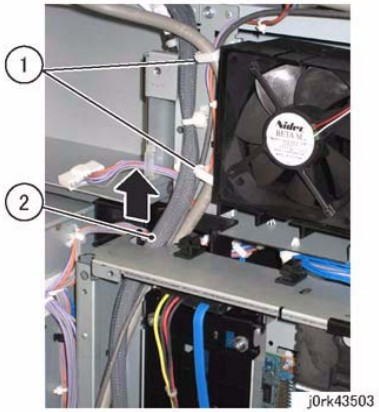

Figure 3 Removing Cables

6. Remove the SBC Chassis Assembly. (Figure 4)
   (1) Remove the screws (x4, three on right side, one on left).
   (2) Remove the SBC Chassis Assembly.

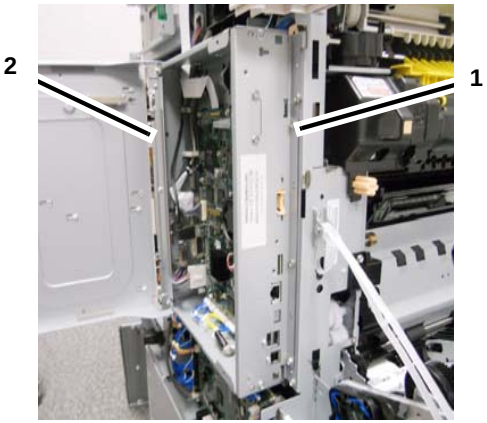

Figure 4 SBC Chassis Assembly

Replacement

1. To install, carry out the removal steps in reverse order.

REP 3.2 HDD Assembly

Parts List on PL 35.2

Removal

CAUTION

Static electricity may damage electrical parts. Always wear a wrist band during servicing. If a wrist band is not available, touch some metallic parts before servicing to discharge the static electricity.

1. Switch off the power and disconnect the power cord.
2. Remove the following parts:
   - Right Cover
   - Rear Lower Cover (REP 14.4)
3. Open the SBC Chassis Cover.
4. Remove the HDD Assembly. (Figure 1)
   (1) Disconnect the connector.
   (2) Remove the screws (x4) and remove the HDD and bracket.

Figure 1 HDD Removal Preparation

5. Remove the HDD from the bracket (Figure 2).
   (1) Remove the screws (x4) and remove the HDD from the bracket.

Figure 2 HDD Removal

Replacement

1. To install, carry out the removal steps in reverse order.
2. After reassembling the machine, perform **Regular AltBoot** (GP 9).
3. Print a configuration page. Verify that all options are enabled.

REP 3.3 SBC PWB

Parts List on PL 35.2

Removal

CAUTION

Static electricity may damage electrical parts. Always wear a wrist band during servicing. If a wrist band is not available, touch some metallic parts before servicing to discharge the static electricity.

NOTE: *Before starting the repair procedure, perform the following, if possible:*

- *Print the Configuration Report*
- *Save machine settings (GP 9)*

1. Switch off the power and disconnect the power cord.
2. Remove the following parts:
   - Rear Lower Cover (REP 14.4)
   - HDD Assembly (REP 3.2)
3. Remove the SBC Rear Cover. (Figure 1)
   (1) Open the Left Door.
   (2) Disconnect the LAN cable.
   (3) Remove the Screws (x3).
   (4) Remove the SBC Rear Cover.

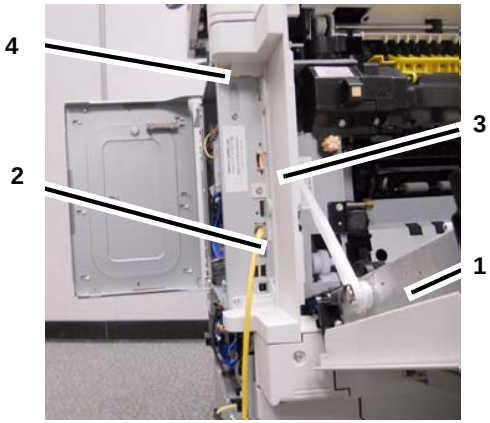

Figure 1 Removal Preparation

4. Prepare to remove the SBC IF Panel. (Figure 2)
   (1) Remove the cross-slot screws (x2).
   (2) Remove the screws (x5).

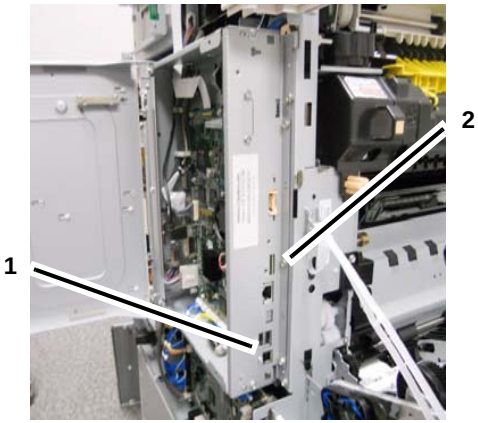

Figure 2 Removal Preparation

5. Remove the SBC IF Panel. (Figure 3)
   (1) Remove the screws (x3).
   (2) Slide the panel to the right and remove the panel.

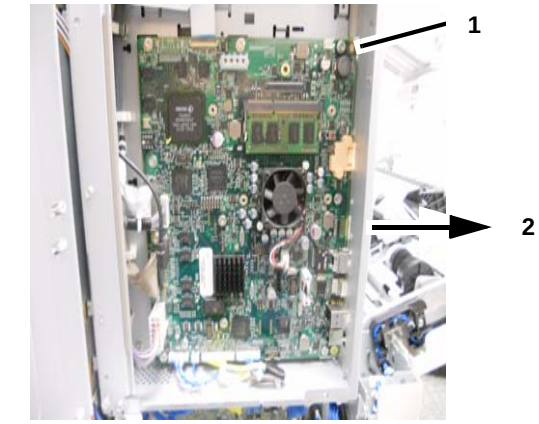

Figure 3 Removing the SBC IF Panel

6. Remove the SBC PWB. (Figure 4)
   (1) Unlock the connector to remove.
   (2) Disconnect the connectors (x9).
   (3) Remove the screws (x7).
   (4) Remove the PWB.

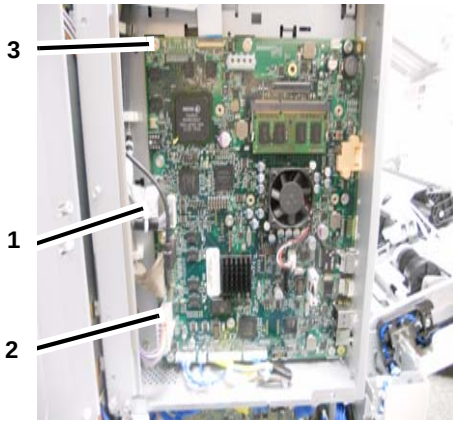

Figure 4 Removing the SBC PWB

Replacement

1. When replacing the SBC PWB, remove components from the old SBC PWB and install it onto the new one.
   a. Remove the EEPROM and Memory PWB from the old SBC PWB and install it onto the new one (Figure 5).

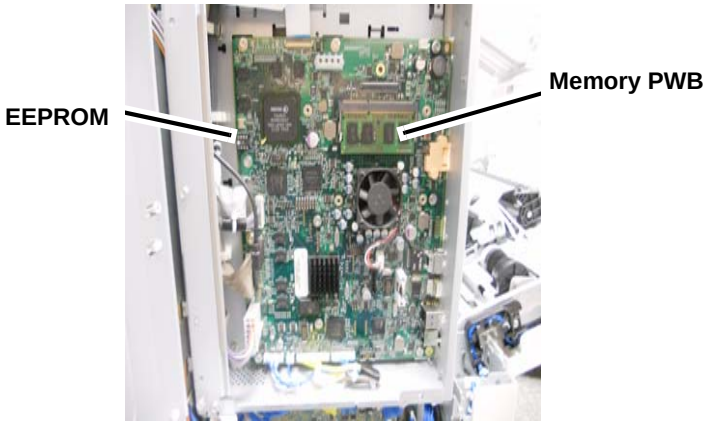

Figure 5 EEPROM and Memory PWB

2. To install, carry out the removal steps in reverse order.

   NOTE: *When installing the IF Panel, fit the half-punched IF Panel convexes (2) in the holes in the SBC PWB.*

3. Verify / update the software versions.
   - If no Configuration Report was printed before replacing the SBC PWB, update the software to the latest version (GP 9)

- If a Configuration Report was printed at the start of the procedure, print a Configuration Report and compare software levels. Update the software as required (GP 9).

4. Restore Machine Settings.

REP 3.4 MCU PWB

Parts List on PL 18.1

Removal

NOTE: *Before starting the repair procedure, perform the following, if possible:*

- *Print the Configuration Report and check software levels*

1. Switch off the power and disconnect the power cord.
2. Remove the following parts:
   - Rear Lower Cover (REP 14.4)
3. Disconnect the MCU PWB connectors (x22). (Figure 1)
   (1) Disconnect the connectors (x24).

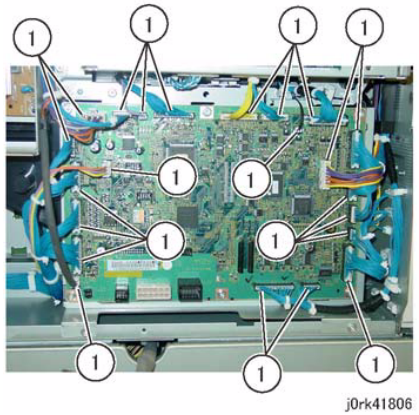

Figure 1 MCU PWB Connectors

4. Remove the MCU PWB. (Figure 2)
   (1) Remove the screws (x6).
   (2) Remove the MCU PWB.

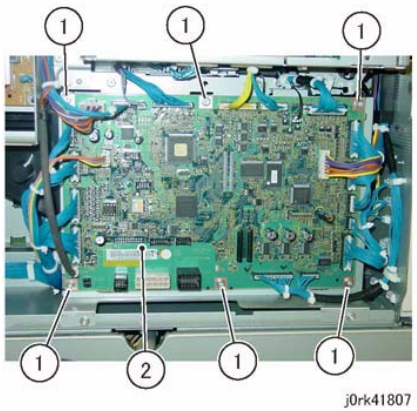

Figure 2 MCU PWB Removal

Replacement

1. When replacing the MCU PWB, remove the EEPROM from the old MCU PWB and install it onto the new one. (Figure 3)

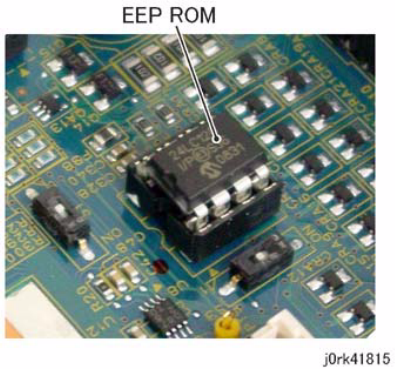

Figure 3 EEPROM

2. To install, carry out the removal steps in reverse order.
3. Verify / update the software versions.
   - If no Configuration Report was printed before replacing the SBC PWB, update the software to the latest version (GP 9)
4. Restore Machine Settings.

REP 4.1 Drum Drive Assembly

Parts List on PL 3.1

Removal

1. Switch off the power and disconnect the power cord.
2. Remove the following parts:
   - SBC Chassis Assy (REP 3.1)
   - Main LVPS (REP 1.1)
3. Remove the Tie Plate. (Figure 1)
   (1) Remove the screw.
   (2) Remove the Harness Guide.
   (3) Remove the screws (x2).
   (4) Remove the Tie Plate.

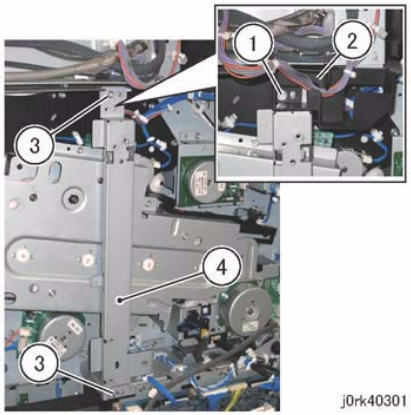

Figure 1 Tie Plate Removal

4. Remove the Drum Drive Assembly. (Figure 2)
   (1) Disconnect the connectors (x2).
   (2) Remove the screws (x4).
   (3) Remove the Drum Drive Assembly.

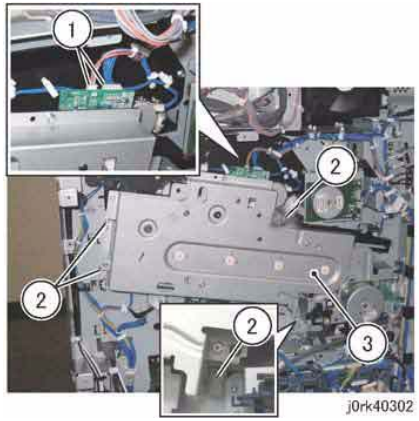

Figure 2 Drum Drive Assy

Replacement

1. To install the Drum Drive Assembly, perform the following procedure.
2. Remove the following parts:
   - Transfer Belt Assembly (REP 9.4)
   - Drum (Y,M,C,K) (REP 9.8)
3. Attach the Drum Drive Assembly. (Figure 3)
   (1) Keep the Link Bar to the left.
   (2) Attach the Drum Drive Assembly.
   (3) Secure it with the screws (4).

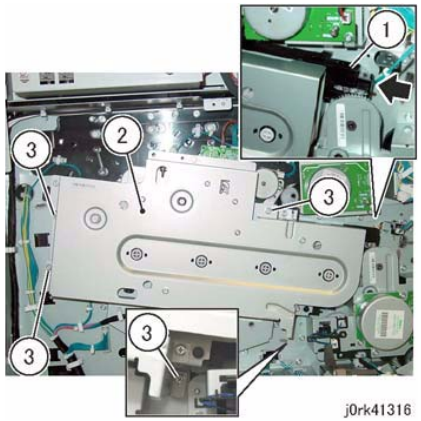

Figure 3 Drum Drive Assy Install

4. By pushing each of the Couplings from the front, check that the Couplings (4: Y, M, C, K) on the Drum Drive Assembly work without binding. (Figure 4)

(1) By pushing each of the Couplings with a finger, check that the Couplings (4: Y, M, C, K) on the Drum Drive Assembly work without binding.

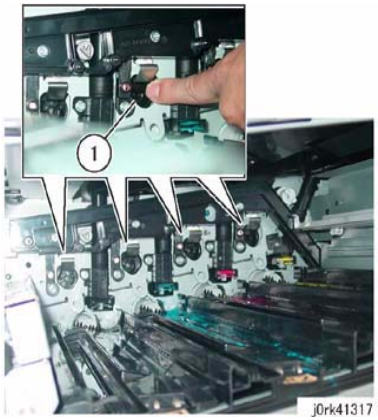

Figure 4 Couplings

5. If any of the Couplings is binding, repeat steps 1 and 3.
6. Reinstall the parts removed in step 2 and the parts removed in the removal procedure.

REP 4.2 Main Drive Assembly

Parts List on PL 3.1

Removal

1. Switch off the power and disconnect the power cord.
2. Remove the following parts:
   - SBC Chassis Assembly (REP 3.1)
   - Registration Idler Gear Assembly (REP 8.2)
3. Remove the Main Drive Assembly. (Figure 1)
   (1) Disconnect the connectors (x4).
   (2) Remove the screws (x4).
   (3) Remove the Main Drive Assembly. (REP 4.2)

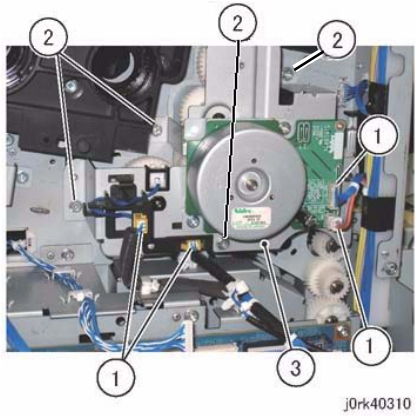

Figure 1 Main Drive Assy Removal

Replacement

1. To install, carry out the removal steps in reverse order.

REP 4.3 Link Guide Assembly

Parts List on PL 3.1

Removal

1. Switch off the power and disconnect the power cord.
2. Remove the following parts:
   - SBC Chassis Assembly (REP 3.1)
   - Main LVPS (REP 1.1)
   - Main Drive Assembly (REP 4.2)
   - Drum Drive Assembly (REP 4.1)
   - Registration Idler Gear Assembly (REP 8.2)
3. Remove the Link Sensor Assembly. (Figure 1)
   (1) Disconnect the connector.
   (2) Remove the screw.
   (3) Remove the Link Sensor Assembly.

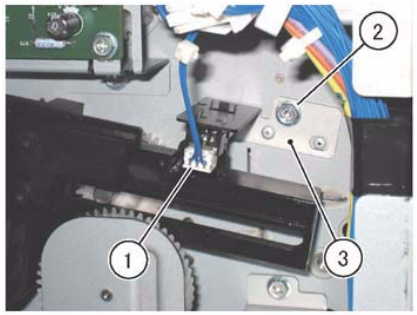

Figure 1 Link Sensor Assy

4. Remove the Link Guide Assembly. (Figure 2)
   (1) Remove the screws (x4).
   (2) Remove the Link Guide Assembly.

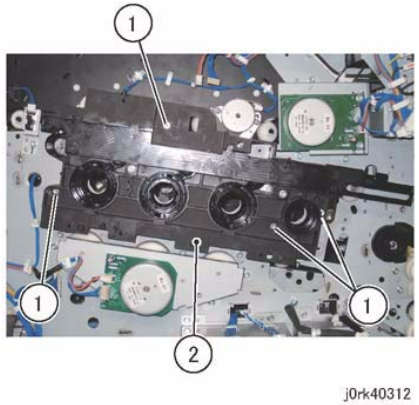

Figure 2 Link Guide Assembly

Replacement

1. To install, carry out the removal steps in reverse order.

   NOTE: *When installing the Link Guide Assembly, make sure that the Actuator and Link Sensor of the Link Guide Assembly are positioned as shown in the figure (approx. 5.4mm). (Figure 3)*

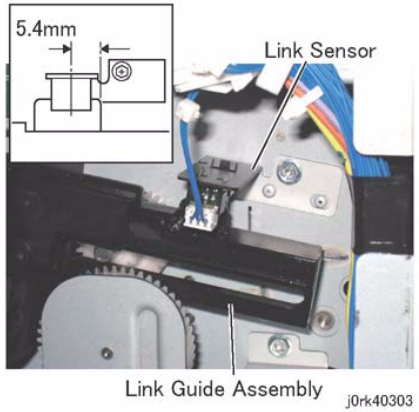

Figure 3 Link Sensor Alignment

REP 4.4 Fuser Drive Assembly

Parts List on PL 3.1

Removal

1. Switch off the power and disconnect the power cord.
2. Remove the following parts:
   - SBC Chassis Assembly (REP 3.1)
   - Main LVPS (REP 1.1)
3. Remove the Fuser Drive Assembly. (Figure 1)
   (1) Disconnect the connectors (x2).
   (2) Remove the screws (x3).
   (3) Remove the Fuser Drive Assembly.

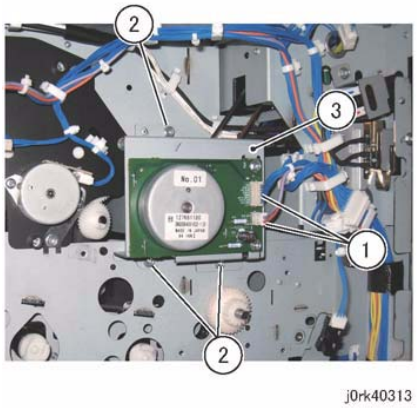

Figure 1 Fuser Drive Assy

Replacement

1. To install, carry out the removal steps in reverse order.

REP 4.5 Developer Drive Assembly

Parts List on PL 3.1

Removal

1. Switch off the power and disconnect the power cord.
2. Remove the following parts:
   - SBC Chassis Assembly (REP 3.1)
   - Main LVPS (REP 1.1)
3. Remove the Developer Drive Assembly. (Figure 1)
   (1) Disconnect the connectors (x2).
   (2) Remove the screws (x4).
   (3) Remove the Developer Drive Assembly.

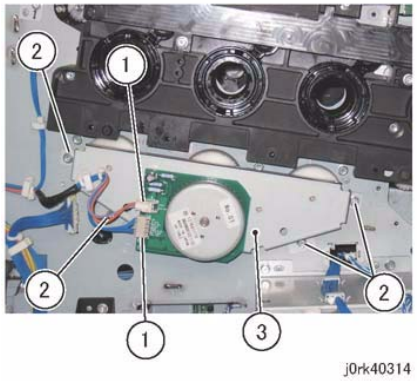

Figure 1 Developer Drive Assy

Replacement

1. To install, carry out the removal steps in reverse order.

REP 4.6 Drum Drive Gear

Parts List on PL 3.2

Removal

1. Switch off the power and disconnect the power cord.
2. Remove the following parts:
   - Drum Drive Assembly (REP 4.1)
3. Remove the cover of the Drum Drive Assembly. (Figure 1)
   (1) Remove the screws (x7).
   (2) Remove the cover.

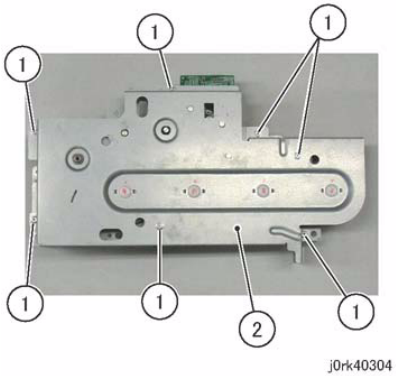

Figure 1 Drum Drive Assy

4. Remove the gears. (Figure 2)

Figure 2 Gears

Replacement

1. To install, carry out the removal steps in reverse order.

NOTE: *Install by aligning the marks on the gears to the triangular marks on the Frame. (Figure 3)*

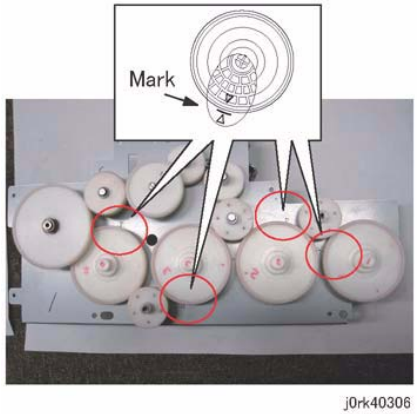

Figure 3 Alignment Marks Alignment

NOTE: *When installing the gears (x2) shown in the figure, install them by aligning the triangular marks on the gears. (Figure 4)*

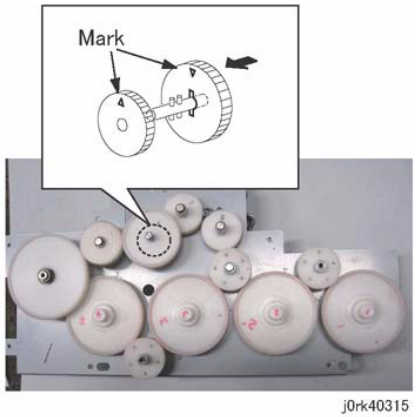

Figure 4 Triangular Marks Alignment

REP 5.1 DADF

Parts List on PL 51.1

Removal

1. Switch off the power and disconnect the power cord.
2. Disconnect the DADF connectors. (Figure 1)
   (1) Release the lock tab and remove the connector cover.
   (2) Disconnect the connectors.
   (3) Release the cable tie.

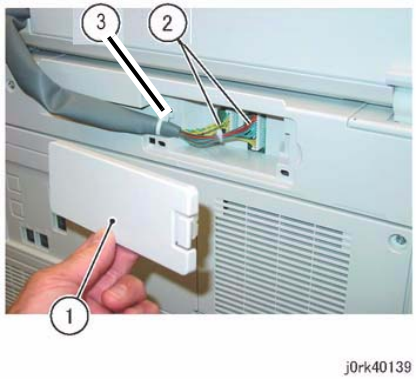

Figure 1 Connector

3. Remove the DADF. (Figure 2)
   (1) Tilt the Counter Balance in the direction of the arrow and remove it from the installation holes.

Figure 2 Tilt Counter Balance

Replacement

1. To install, carry out the removal steps in reverse order.
2. Install the DADF. (Figure 3)
   (1) Insert the tabs of the Counter Balance into the grooves of the installation holes.

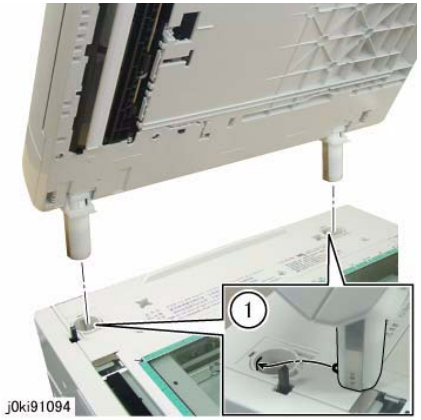

Figure 3 Inserting Tabs

3. Perform ADJ 5.3 DADF Original Detection Correction.

REP 5.2 DADF Platen Cushion

Parts List on PL 51.1

Removal

NOTE: *The DADF Platen Cushion is pasted on with double sided adhesive tapes.*

1. Switch off the power and disconnect the power cord.
2. Peel off the DADF Platen Cushion. (Figure 1)
   (1) Remove the DADF Platen Cushion.

Figure 1 DADF Platen Cushion

Replacement

1. Paste on the DADF Platen Cushion. (Figure 2)
   (1) Place the DADF Platen Cushion on the Platen Glass.
   (2) Set the gap between the Registration Guide and Platen Guide.
   (3) Slowly lower the DADF and press it onto the DADF Platen Cushion.

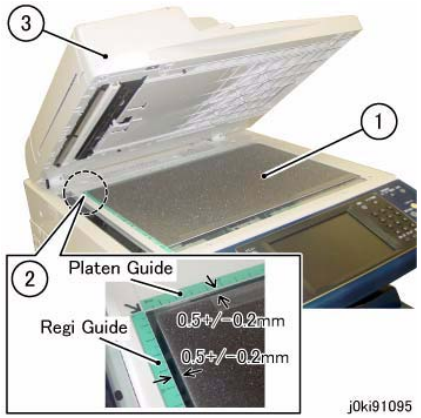

Figure 2 Paste DADF Platen Cushion

REP 5.3 DADF Front Cover

Parts List on PL 51.2

Removal

1. Switch off the power and disconnect the power cord.
2. Open the Top Cover.
3. Open the DADF.
4. Remove the DADF Front Cover. (Figure 1)
   (1) Remove the self-self-tapping screws (x4).
   (2) Remove the DADF Front Cover.

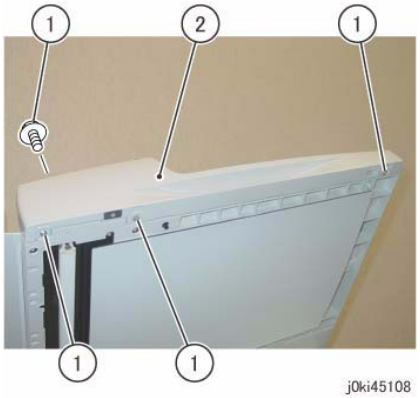

Figure 1 DADF Front Cover Removal

Replacement

1. To install, carry out the removal steps in reverse order.

REP 5.4 DADF Rear Cover

Parts List on PL 51.2

Removal

1. Switch off the power and disconnect the power cord.
2. Turn the DADF Document Tray upside down. (Figure 1)
   (1) Open the Top Cover.
   (2) Turn the DADF Document Tray upside down.

Figure 1 DADF Upside Down

3. Remove the screws that secure the DADF Rear Cover. (Figure 2)
   (1) Remove the screws (x2).

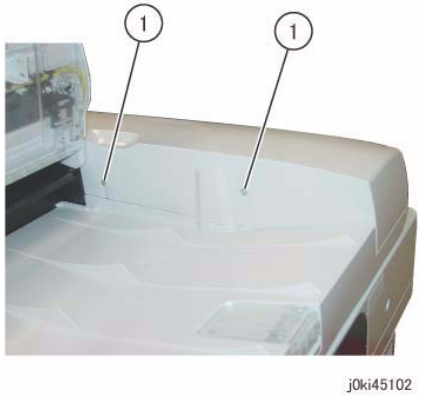

Figure 2 DADF Rear Cover

4. Open the DADF.
5. Release the lock tabs of the DADF Rear Cover. (Figure 3)

(1) Release the hooks (x2).

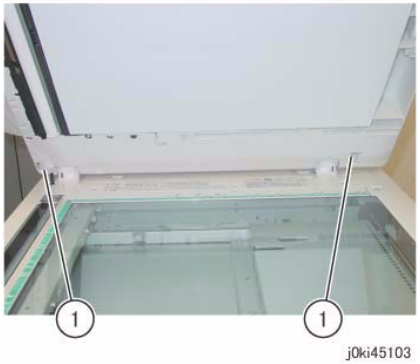

Figure 3 Releasing Hooks

6. Close the DADF gently.
7. Remove the DADF Rear Cover. (Figure 4)
   (1) Remove the DADF Rear Cover in the direction of the arrow.
   (A) Hook

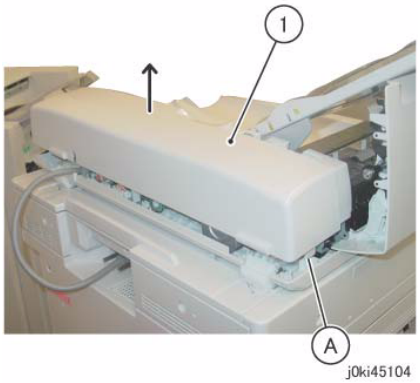

Figure 4 Removing DADF Rear Cover

Replacement

1. To install, carry out the removal steps in reverse order.

REP 5.5 DADF Feeder Assembly - see TBD note

Parts List on PL 51.2

Removal

1. Switch off the power and disconnect the power cord.
2. Remove the DADF Front Cover. (REP 5.3)
3. Remove the DADF Rear Cover. (REP 5.4)
4. Remove the DADF. (REP 5.1)
5. Remove the DADF Document Tray. (REP 5.9)
6. Disconnect the DADF PWB connectors. (Figure 1)
   (1) Disconnect the connectors (x4).
   (2) Remove the self-tapping screw and the Ground Wire.

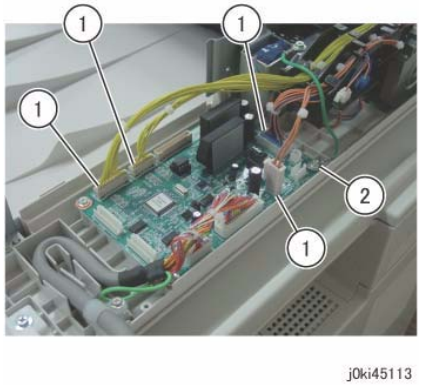

Figure 1 DADF Connectors

7. Remove the DADF Feeder Assembly. (Figure 2)
   (1) Remove the self-tapping screw.
   (2) Remove the DADF Feeder Assembly in the direction of the arrow.

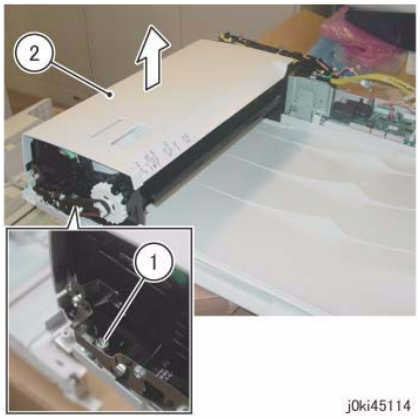

Figure 2 DADF Feeder Assy Removal

Replacement

1. To install, carry out the removal steps in reverse order.
2. Align the positioning pin of the Base Frame and the hole of the DADF Feeder Assembly. (Figure 3)

Figure 3 Align the Positioning Pin

3. When installing the Feeder Assembly to the Base Frame, check thefollowing (Figure 4)

   (A) At the front: The Frame of the DADF Feeder Assembly is attached to the positioning pin of the Base Frame as shown in the figure.

   (B) The Bracket of the DADF Feeder Assembly is attached to the support of the Base Frame as shown in the figure.

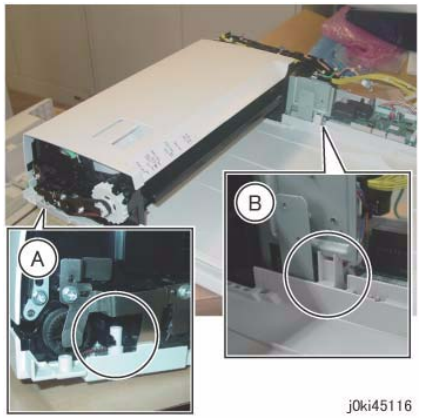

Figure 4 Installing the Feeder Assembly to the Base Frame

4. Go to dC135 and reset Counter 955-806. TBD - This HFSI counter number is NG for javelin. Need SME input.

REP 5.6 DADF PWB

Parts List on PL 51.2

Removal

1. Switch off the power and disconnect the power cord.
2. Remove the DADF Rear Cover. (REP 5.4)
3. Remove the connecctor cover. (Figure 1)
   (1) Remove screw.
   (2) Remove cover

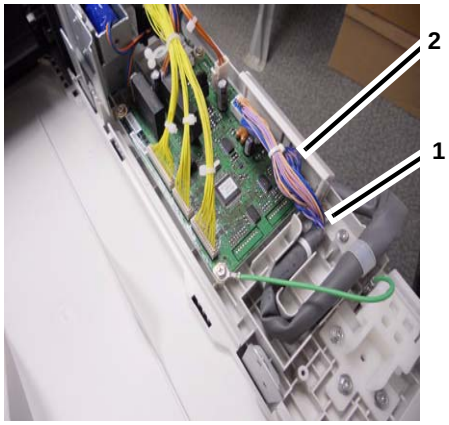

Figure 1 Removing Connector Cover

4. Remove the DADF PWB. (Figure 2)
   (1) Remove the self-tapping screws (x2) and the Ground Wires (x2).
   (2) Remove the self-tapping screws (x2).
   (3) Disconnect connectors (7)
   (4) Remove the DADF PWB.

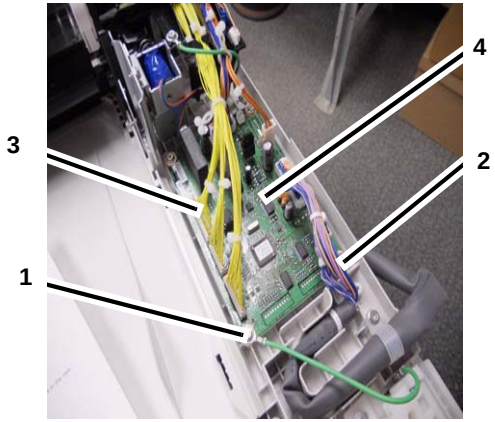

Figure 2 DADF PWB Removal

Replacement

1. To install, carry out the removal steps in reverse order.
2. Switch the ROM on the new PWB with the EEPROM from the old PWB. (Figure 3)
   This is because it stores the alignment value of the DADF.

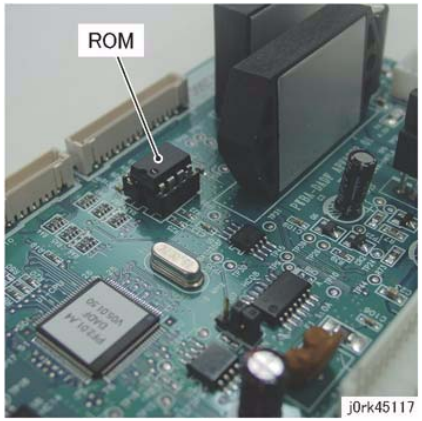

Figure 3 ROM

3. Check the SW version and update to the latest version if reqired (GP 9).

REP 5.7 Left Counter Balance

Parts List on PL 51.3

Removal

CAUTION

Left/Right Counter Balance is identified by its spring pressure.

- *Left Counter Balance: strong spring pressure*
- *Right Counter Balance: weak spring pressure*

1. Switch off the power and disconnect the power cord.
2. Remove the DADF Front Cover. (REP 5.3)
3. Remove the DADF Rear Cover. (REP 5.4)
4. Remove the DADF. (REP 5.1)
5. Remove the DADF Document Tray. (REP 5.9)
6. Remove the DADF Feeder Assembly. (REP 5.5)
7. Remove the screws that secure the Tie Plate. (Figure 1)
   (1) Remove the self-tapping screw.
   (2) Remove the Ground Plate.
   (3) Remove the self-tapping screws (x2).

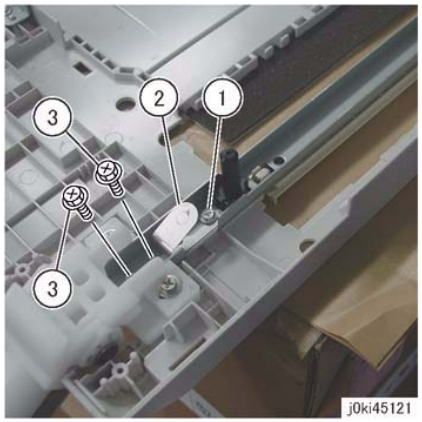

Figure 1 Tie Plate Screws

8. Remove the Left Counter Balance. (Figure 2)
   (1) Remove the self-tapping screws (Large: x2).
   (2) Remove the Left Counter Balance.

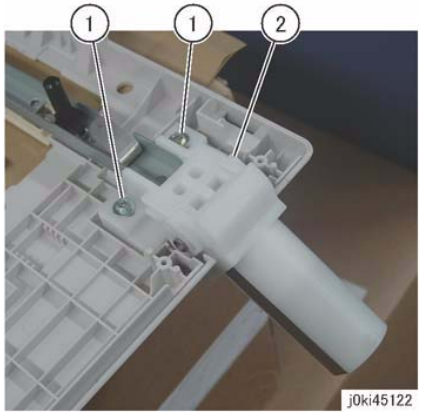

Figure 2 Left Counter Balance

Replacement

1. To install, carry out the removal steps in reverse order.
2. When installing the Left Counter Balance, align the hole of the Left Counter Balance to the positioning boss of the Frame. (Figure 3)

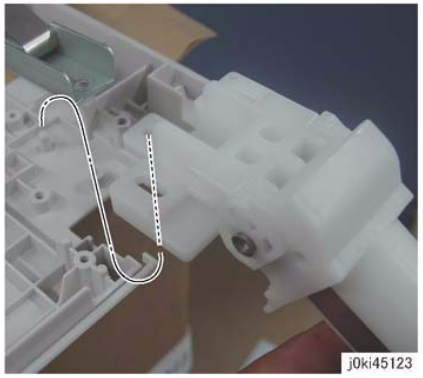

Figure 3 Left Counter Balance Hole Alignment

3. Align the Ground Plate to the positioning boss. (Figure 4)

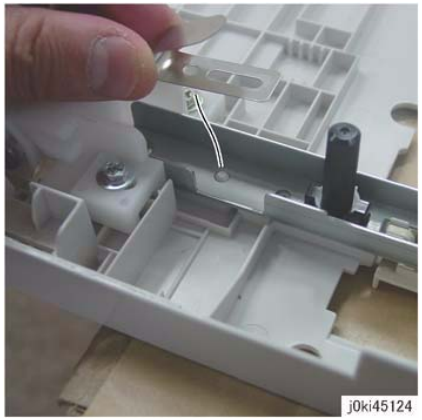

Figure 4 Ground Plate Alignment

REP 5.8 Right Counter Balance

Parts List on PL 51.3

Removal

CAUTION

Left/Right Counter Balance is identified by its spring pressure.

- *Left Counter Balance: strong spring pressure*
- *Right Counter Balance: weak spring pressure*

1. Switch off the power and disconnect the power cord.
2. Remove the DADF Rear Cover. (REP 5.4)
3. Remove the DADF. (REP 5.1)
4. Take note of the graduation of the scale. (Figure 1)

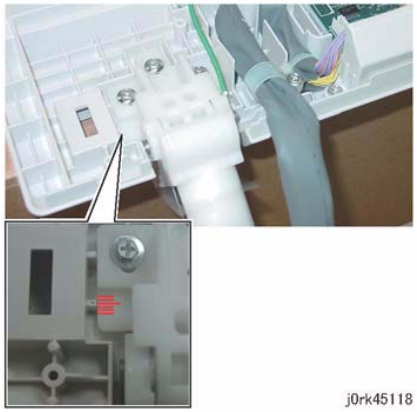

Figure 1 Graduation Scale Marks

5. Remove the Right Counter Balance. (Figure 2)
   (1) Remove the self-tapping screws (Large: x3).
   (2) Remove the screw (Small: x1) and remove the Ground Wire.
   (3) Remove the right Counter Balance.

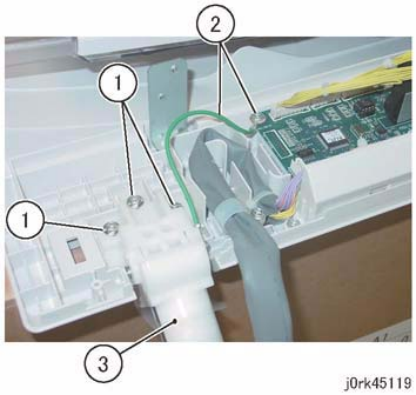

Figure 2 Right Counter Balance Removal

Replacement

1. To install, carry out the removal steps in reverse order.
2. If it was replaced, perform checking for DADF Lead-Skew Adjustment. (ADJ 5.1)

REP 5.9 DADF Document Tray

Parts List on PL 51.4

Removal

1. Switch off the power and disconnect the power cord.
2. Remove the DADF Front Cover. (REP 5.3)
3. Remove the DADF Rear Cover. (REP 5.4)
4. Disconnect the connector of the DADF Document Set LED. (Figure 1)
   (1) Remove the self-tapping screw.
   (2) Remove the LED Bracket.
   (3) Remove the wire harness from the hook.
   (4) Disconnect the connector.

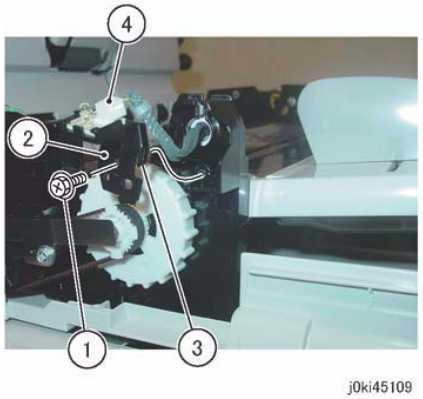

Figure 1 DADF Set LED Connector

5. Disconnect the connector. (Figure 2)
   (1) Remove the clamp.
   (2) Disconnect the connector of the P/J756.
   (3) Remove the P/J756 wire harness from the Harness Guide.

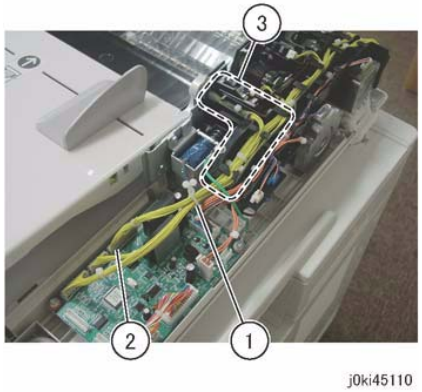

Figure 2 DADF Set LED Connector Removal

6. At the front side of the DADF Document Tray, remove the boss of the DADF Document Tray from the installation hole of the Frame. (Figure 3)
   (1) Position the DADF Document Tray vertically.
   (2) Press the boss of the DADF Document Tray in the direction of the arrow and remove it from the installation hole.
   (3) Remove the wire harness of the DADF Document Set LED from the groove of the Frame.

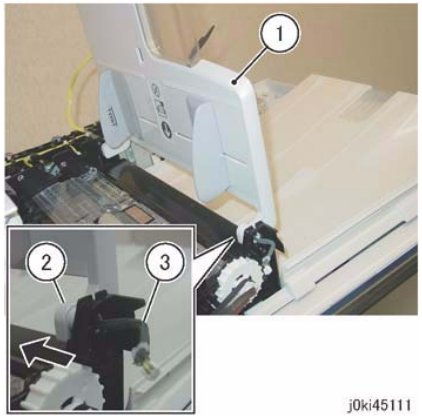

Figure 3 Boss Removal

7. Pull out and remove the wire harness at the rear side of the DADF Document Tray from the hole of the Frame. (Figure 4)
   (1) Pull out and remove the wire harness through the hole on the Frame.

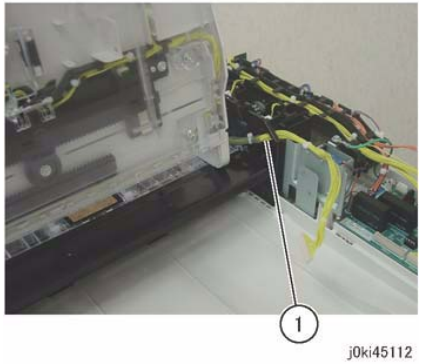

Figure 4 Wire Harness Removal

Replacement

1. To install, carry out the removal steps in reverse order.

REP 5.10 Top Cover

Parts List on PL 51.4

Removal

1. Switch off the power and disconnect the power cord.
2. Remove the DADF Front Cover. (REP 5.3)
3. Remove the DADF Rear Cover. (REP 5.4)
4. Remove the DADF. (REP 5.1)
5. Remove the DADF Document Tray. (REP 5.9)
6. Remove the DADF Feeder Assembly. (REP 5.5)
7. Remove the Registration Chute. (REP 5.14)
8. Open the Top Cover.
9. Remove the Top Cover. (Figure 1)
   (1) Remove the self-tapping screw.
   (2) Remove the Stud Bracket.
   (3) Remove the Top Cover.

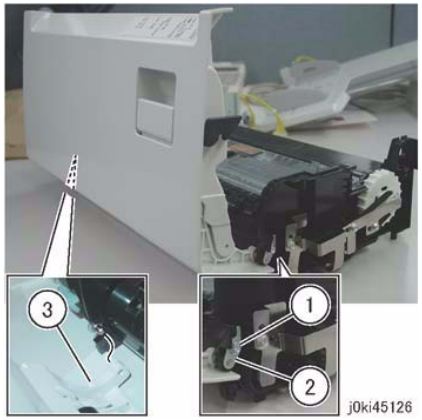

Figure 1 Top Cover Removal

Replacement

1. To install, carry out the removal steps in reverse order.

REP 5.11 Harness Guide and Wire Harness

Parts List on PL 51.5

Removal

1. Switch off the power and disconnect the power cord.
2. Remove the DADF Front Cover. (REP 5.3)
3. Remove the DADF Rear Cover. (REP 5.4)
4. Remove the DADF. (REP 5.1)
5. Remove the DADF Document Tray. (REP 5.9)
6. Remove the DADF Feeder Assembly. (REP 5.5)
7. Remove the Registration Chute. (REP 5.14)
8. Remove the Top Cover. (REP 5.10)
9. Remove the wire harness from the Harness Guide. (Figure 1)
   (1) Disconnect the connectors (x2).
   (2) Remove the wire harness from the Harness Guide.

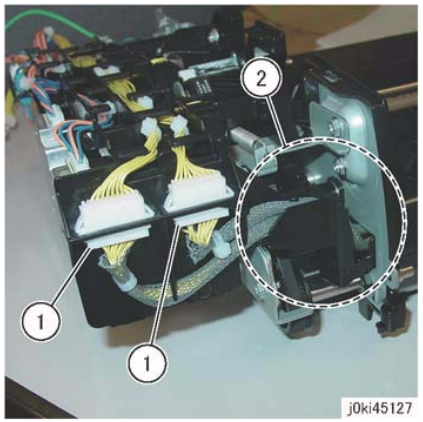

Figure 1 Wire Harness Removal

10. Remove the wire harness from the Harness Guide. (Figure 2)
    (1) Remove the J753 wire harness from the Harness Guide.

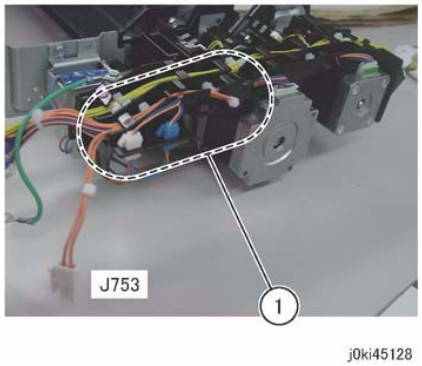

Figure 2 J753 Location

11. Remove the wire harness of the solenoid from the Harness Guide. (Figure 3)
    (1) Disconnect the connector (Blue).
    (2) Disconnect the connector (White).
    (3) Remove the wire harness from the Harness Guide.

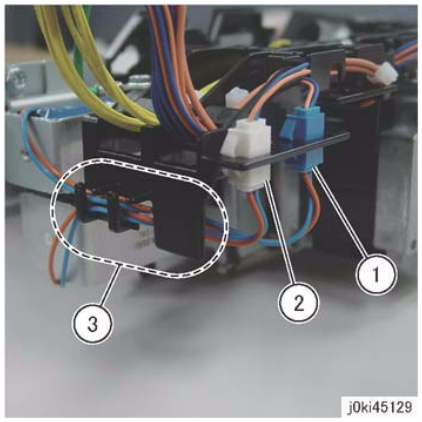

Figure 3 Solenoid Harness Removal

12. Disconnect the connector. (Figure 4)
    (1) Disconnect the connectors (x4).

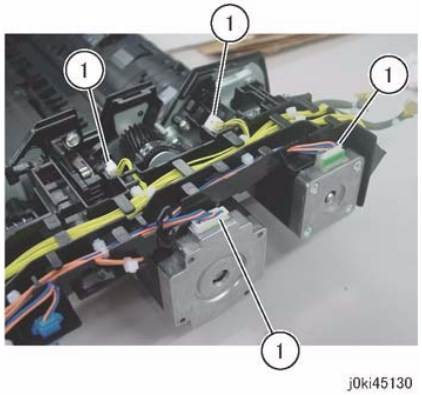

Figure 4 Harness Connectors

13. Remove the Harness Guide and the wire harness. (Figure 5)
    (1) Remove the screw.
    (2) Remove the screw and the Ground Wire.
    (3) Remove the Harness Guide and the wire harness.

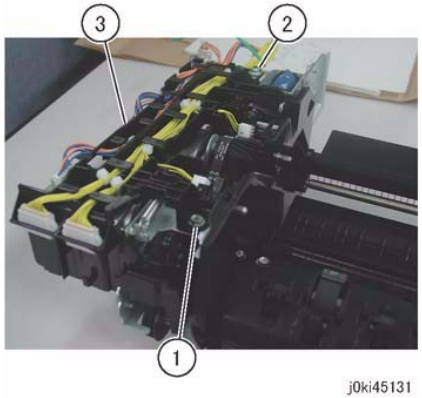

Figure 5 Harness Removal

Replacement

1. To install, carry out the removal steps in reverse order.
2. Hang the J753 wire harness to the hook (A). (Figure 6)
   (A)Hook

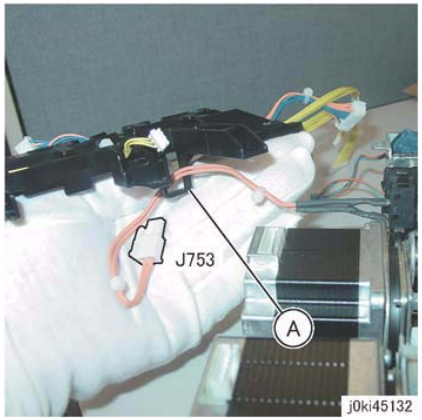

Figure 6 J753 Harness Hook

REP 5.12 DADF Registration Motor

Parts List on PL 51.5

Removal

1. Switch off the power and disconnect the power cord.
2. Remove the DADF Front Cover. (REP 5.3)
3. Remove the DADF Rear Cover. (REP 5.4)
4. Remove the DADF. (REP 5.1)
5. Remove the DADF Document Tray. (REP 5.9)
6. Remove the DADF Feeder Assembly. (REP 5.5)
7. Remove the Registration Chute. (REP 5.14)
8. Remove the Top Cover. (REP 5.10)
9. Remove the Harness Guide and the wire harness. (REP 5.11)
10. Remove the DADF Registration Motor. (Figure 1)
    (1) Remove the spring.
    (2) Remove the screws (x2).
    (3) Remove the DADF Registration Motor.

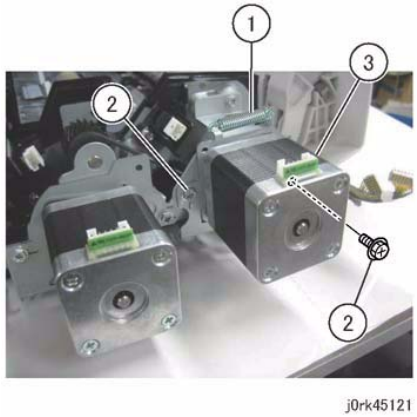

Figure 1 DADF Reg Motor

Replacement

1. To install, carry out the removal steps in reverse order.
2. Install the Belt (A) to the Pulley of the DADF Registration Motor. (Figure 2)
   (A)Belt

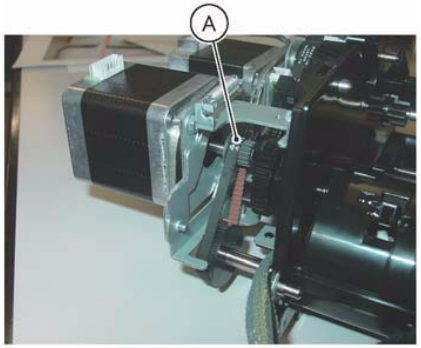

j0ki45135

Figure 2 Belt Installation

REP 5.13 DADF Feed Motor

Parts List on PL 51.5

Removal

1. Switch off the power and disconnect the power cord.
2. Remove the DADF Front Cover. (REP 5.3)
3. Remove the DADF Rear Cover. (REP 5.4)
4. Remove the DADF. (REP 5.1)
5. Remove the DADF Document Tray. (REP 5.9)
6. Remove the DADF Feeder Assembly. (REP 5.5)
7. Remove the Registration Chute. (REP 5.14)
8. Remove the Top Cover. (REP 5.10)
9. Remove the Harness Guide and the wire harness. (REP 5.11)
10. Turn the DADF Feeder Assembly upside down.
11. Remove the DADF Feed Motor. (Figure 1)
    (1) Remove the spring.
    (2) Remove the screws (x2).
    (3) Remove the DADF Feed Motor.

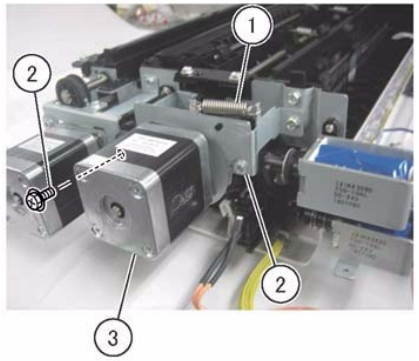

j0rk45122

Figure 1 DADF Feed Motor Removal

Replacement

1. To install, carry out the removal steps in reverse order.
2. Install the Belt to the Pulley of the DADF Feed Motor. (Figure 2)

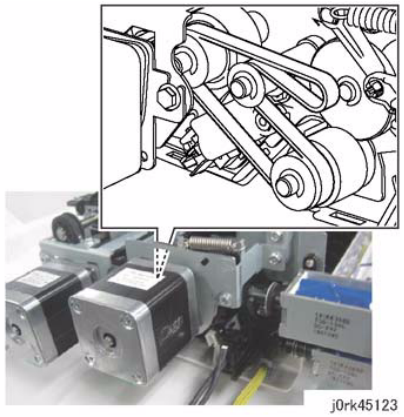

Figure 2 DADF Feed Motor Pulley Install

REP 5.14 Registration Chute

Parts List on PL 51.8

Removal

1. Switch off the power and disconnect the power cord.
2. Remove the DADF Front Cover. (REP 5.3)
3. Remove the DADF Rear Cover. (REP 5.4)
4. Remove the DADF. (REP 5.1)
5. Remove the DADF Document Tray. (REP 5.9)
6. Remove the DADF Feeder Assembly. (REP 5.5)
7. Turn the DADF Feeder Assembly upside down.
8. Remove the Registration Chute. (Figure 1)
   (1) Remove the self-tapping screws (x2).
   (2) Remove the Registration Chute.

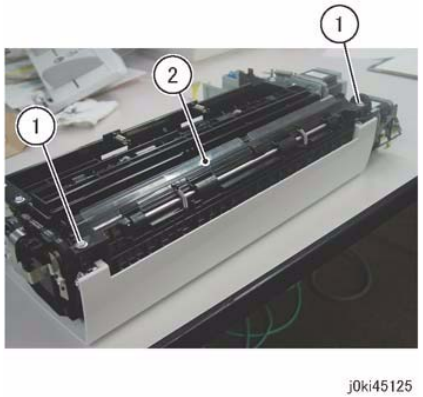

Figure 1 Registration Chute Removal

Replacement

1. To install, carry out the removal steps in reverse order.

REP 5.15 Retard Chute

Parts List on PL 51.8

Removal

1. Switch off the power and disconnect the power cord.
2. Remove the DADF Front Cover. (REP 5.3)
3. Remove the DADF Rear Cover. (REP 5.4)
4. Remove the DADF Document Tray. (REP 5.9)
5. Open the Retard Chute.
6. Remove the Retard Chute. (Figure 1)
   a. Remove the Retard Chute in the direction of the arrow.

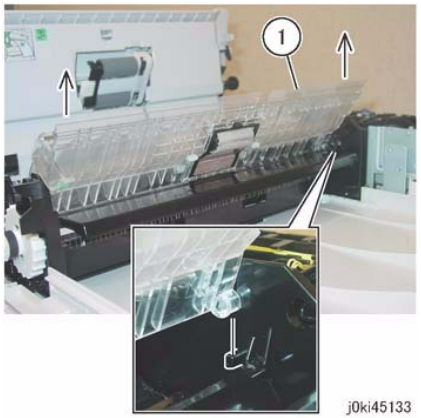

Figure 1 Retard Chute

Replacement

1. To install, carry out the removal steps in reverse order.

REP 5.16 Takeaway Roll

Parts List on PL 51.9

Removal

1. Switch off the power and disconnect the power cord.
2. Remove the DADF Front Cover. (REP 5.3)
3. Remove the DADF Rear Cover. (REP 5.4)
4. Remove the DADF. (REP 5.1)
5. Remove the DADF Document Tray. (REP 5.9)
6. Remove the DADF Feeder Assembly. (REP 5.5)
7. Remove the Registration Chute. (REP 5.14)
8. Remove the Top Cover. (REP 5.10)
9. Remove the Harness Guide and the wire harness. (REP 5.11)
10. Loosen the Belt tension of the DADF Registration Motor. (Figure 1)
    (1) Loosen the screws (x2).

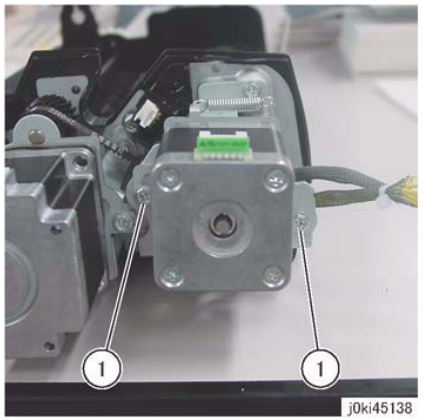

Figure 1 DADF Reg Motor Belt Tension

11. Remove the DADF Registration Motor and the Bracket. (Figure 2)
    (1) Remove the spring.
    (2) Remove the screws (x2).
    (3) Remove the DADF Registration Motor and the Bracket.
    (4) Remove the Belt.

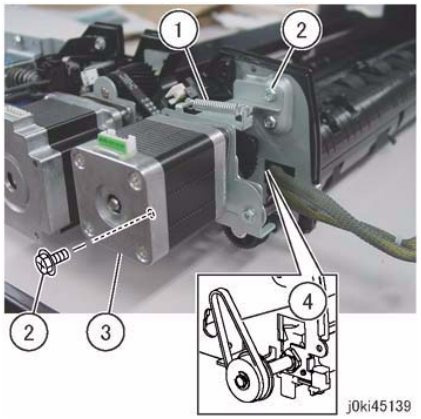

Figure 2 DADF Reg Motor Bracket Removal

12. Remove the Invert Chute. (Figure 3)
    (1) Remove the self-tapping screws (x2).
    (2) Remove the Invert Chute.

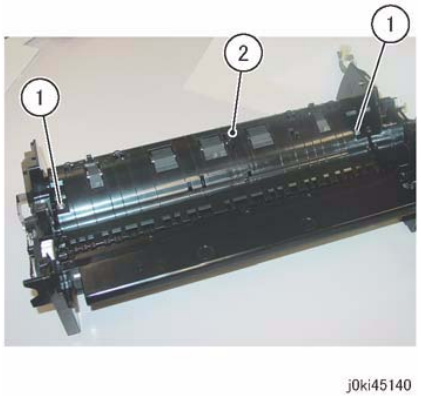

Figure 3 Invert Chute Removal

13. Remove the gear at the rear. (Figure 4)
    (1) Remove the E-Clip.
    (2) Remove the gear.

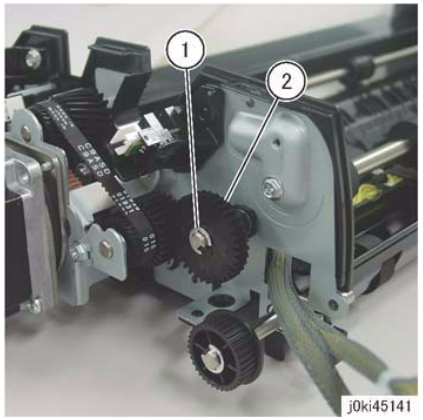

Figure 4 Rear Gear Removal

14. Remove the bearing at the rear. (Figure 5)
    (1) Remove the E-Clip.
    (2) Remove the bearing.

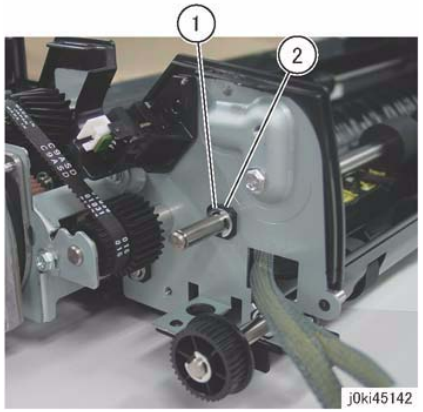

Figure 5 Bearing Removal

15. Remove the Ground Plate at the front. (Figure 6)
    (1) Remove the self-tapping screws (x3).
    (2) Remove the Ground Plate.

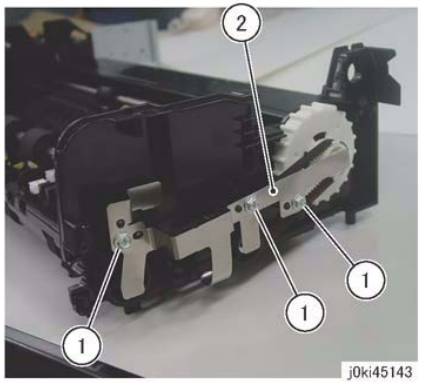

Figure 6 Ground Plate Removal

16. Remove the bearing at the front. (Figure 7)
    (1) Remove the E-Clip.
    (2) Remove the bearing.

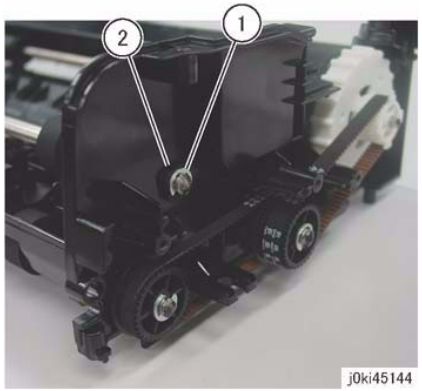

Figure 7 Front Bearing Removal

17. Remove the Takeaway Roll. (Figure 8)
    (1) Remove the Takeaway Roll.

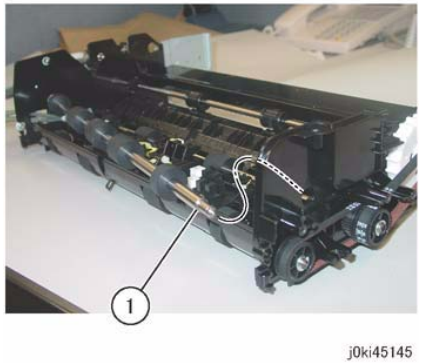

Figure 8 Takeaway Roll Removal

Replacement

1. To install, carry out the removal steps in reverse order.
2. Install the Belt (A) to the Pulley of the DADF Registration Motor. (Figure 9)

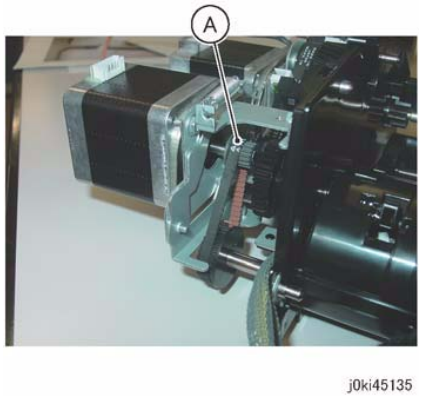

Figure 9 Belt Installation

REP 5.17 Sensor Bracket

Parts List on PL 51.9

Removal

1. Switch off the power and disconnect the power cord.
2. Remove the DADF Front Cover. (REP 5.3)
3. Remove the DADF Rear Cover. (REP 5.4)
4. Remove the DADF. (REP 5.1)
5. Remove the DADF Document Tray. (REP 5.9)
6. Remove the DADF Feeder Assembly. (REP 5.5)
7. Remove the Registration Chute. (REP 5.14)
8. Remove the Top Cover. (REP 5.10)
9. Remove the Harness Guide and the wire harness. (REP 5.11)
10. Remove the Takeaway Roll. (REP 5.16)
11. Remove the Sensor Bracket. (Figure 1)
    (1) Remove the self-tapping screws (x4).
    (2) Disconnect the connector.
    (3) Remove the Sensor Bracket.
    (4) Pull out and remove the wire harnesses (x2) through the hole on the Frame.

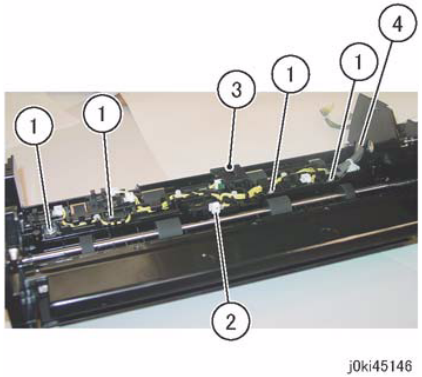

Figure 1 Sensor Bracket Removal

Replacement

1. To install, carry out the removal steps in reverse order.

REP 5.18 Nudger Roll, Feed Roll - see TBD note

Parts List on PL 51.12

Removal

NOTE: *Nudger, Feed,(REP 5.18) and Retard Rolls (REP 5.19) should be replaced at the same time*

1. Switch off the power and disconnect the power cord.
2. Open the Top Cover.
3. Open the Feed Upper Chute. (Figure 1)
   (1) Release the hook and open the Feed Upper Chute.

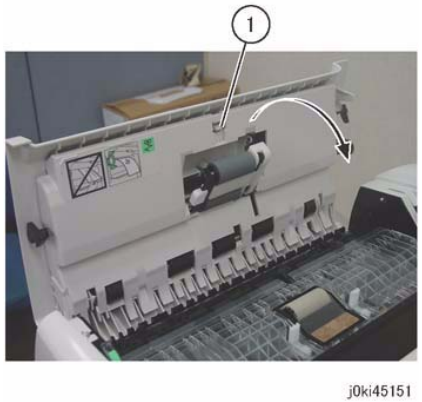

Figure 1 Feed Upper Chute

4. Shift the housing. (Figure 2)
   Release the hook and shift the housing in the direction of the arrow.

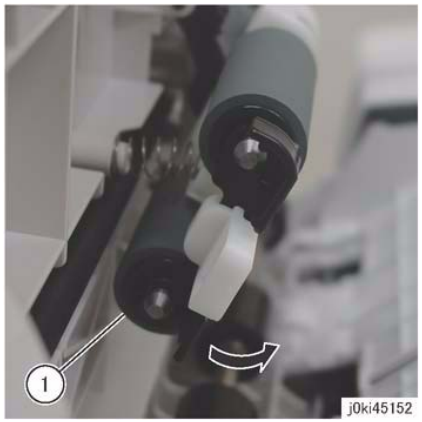

Figure 2 Housing Shift

5. Remove the housing. (Figure 3)
   (1) Remove the housing in the direction of the arrow.

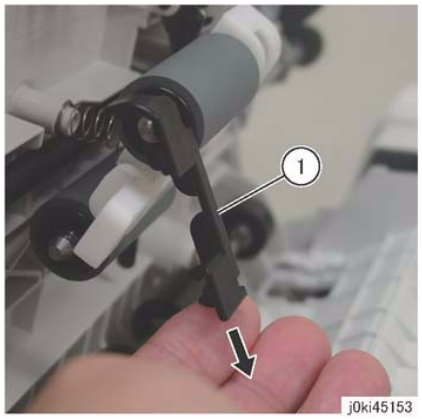

Figure 3 Housing Removal

6. Remove the Nudger Roll and the Feed Roll. (Figure 4)
   (1) Remove the Nudger Roll.
   (2) Remove the Feed Roll.

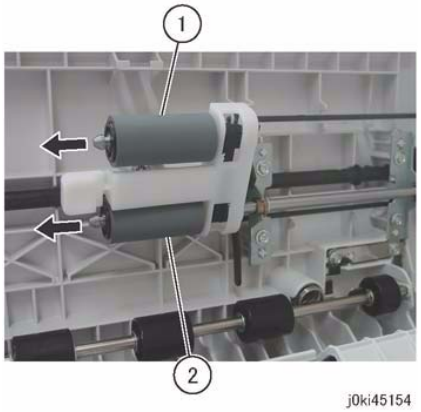

Figure 4 Nudger/Feed Roll Removal

Replacement

1. To install, carry out the removal steps in reverse order.
2. Install the Nudger/Feed Roll while aligning them as shown in the figure. (Figure 5)

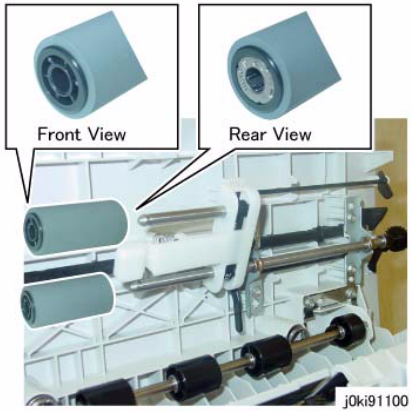

Figure 5 Nudger/Feed Roll Alignment

3. Go to dC135 and reset Counter 955-806. TBD - This HFSI counter number is NG for javelin. Need SME input.

REP 5.19 Retard Roll

Parts List on PL 51.14

Removal

NOTE: *Nudger, Feed,(REP 5.18) and Retard Rolls (REP 5.19) should be replaced at the same time*

1. Switch off the power and disconnect the power cord.
2. Open the Top Cover.
3. Open the Retard Roll Cover. (Figure 1)

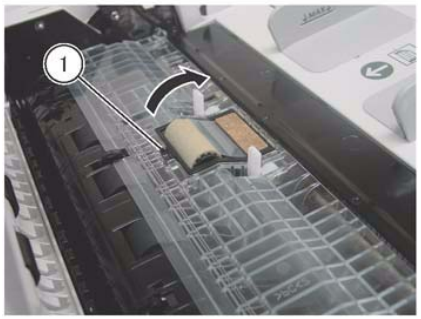

j0ki45149

Figure 1 Retard Roll Cover

(1) Release the hook and open the Retard Roll Cover in the direction of the arrow.

4. Remove the Retard Roll. (Figure 2)

   Remove the Retard Roll.

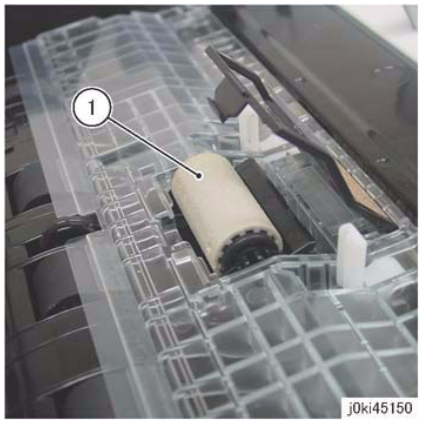

j0ki45150

Figure 2 Retard Roll Removal

Replacement

1. To install, carry out the removal steps in reverse order.
2. Go to dC135 and reset Counter 955-806. TBD - This HFSI counter number does NG for javelin. Need SME input.

REP 6.1 Platen Cushion

Parts List on PL 1.1

Removal

1. Peel the Platen Cushion from the Platen Cover (held in place by double-sided tape on the inboard and outboard edges).
2. Remove any tape or cushion residue from the Platen Cover. Be careful not to damage the mounting surfaces.

Replacement

1. Place the Platen Cushion on the Platen Glass, at the proper position. (Figure 1).
   (1) Peel off the seals (x2).
   (2) Leave a gap of 0.50.3mm between the Regi. Guide and the Platen Guide.
   (3) Close the Platen Cover gently and press it onto the Platen Cushion.

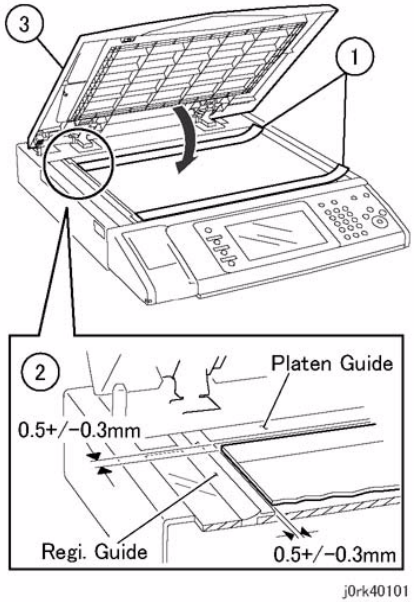

Figure 1 Positioning the Cushion

REP 6.2 ROS Assembly - see TBD note

Parts List on PL 2.1

Removal

CAUTION

Do not subject the ROS to twisting or to impact as this may change the ROS alignment. (The limit is 1 fingerwidth - approx. 10mm.). The ROS is not adjustable; any misalignment caused by improper handling is permanent, and the unit will have to be replaced.

This ROS utilizes a component (Laser Diode) that may get easily damaged by static electricity. When performing this procedure, take appropriate ESD countermeasures.

CAUTION

When handling the ROS Assembly, hold it only at the prescribed locations (grip the handle and support the bottom). This is to prevent the ROS Assembly from being twisted. (Figure 1)

Figure 1 Supporting ROS Assy

1. Switch off the power and disconnect the power cord.
2. Remove the Right Cover. (PL 19.3)
3. Remove the HVPS. (REP 1.2)
4. Remove the Panel. (Figure 2)
   (1) Disconnect the connector.
   (2) Release the clamps (x2).
   (3) Remove the screws (x4).
   (4) Remove the Panel.

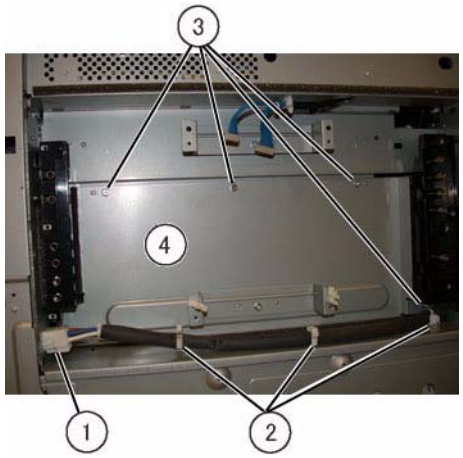

Figure 2 HVPS Panel Removal

5. Remove the Brackets (x2) that secure the ROS Assembly. (Figure 3)
   (1) Disconnect the connectors (x3).
   (2) Release the clamps (x3).
   (3) Remove the screw.
   (4) Remove the Bracket.
   (5) Remove the screw.
   (6) Remove the bracket.

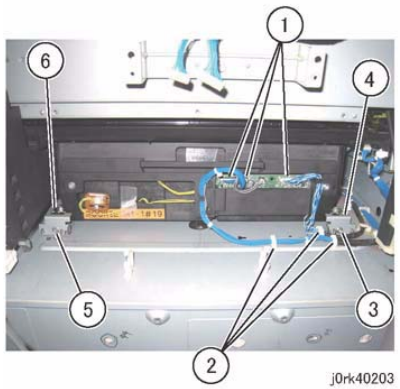

Figure 3 Bracket Removal

6. Remove the ROS Assembly. (Figure 4)
   (1) Hold to the handle of the ROS Assembly and pull out and remove the ROS Assembly.

NOTE: *If you find it difficult to pull out and remove, hold to the Side Cover with both hands and pull.*

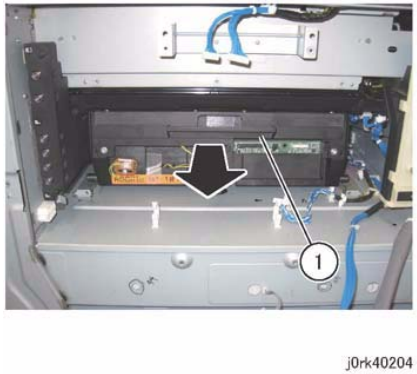

Figure 4 ROS Assy Removal

Replacement

1. To install, carry out the removal steps in reverse order.

CAUTION

- *When installing the ROS Assembly, push the handle until it goes all the way in. (Figure 5)*

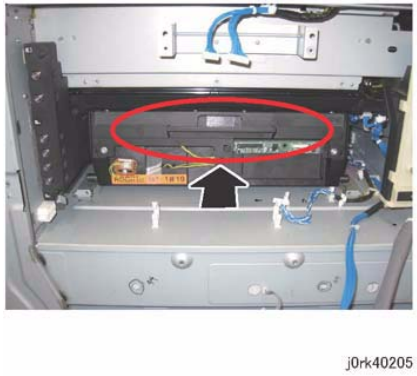

Figure 5 ROS Assy Handle

CAUTION

- *When replacing the ROS Assembly, check the part number stated on the bar-code label attached to the ROS unit, and seeing Table 1, rewrite the setting in NVM 760-211 according to the last digit. (Figure 6)*

  NOTE: *A mismatch between the ROS Assembly Part No. and the NVM setting leads to a larger amount of color misregistration, causing poor image quality.*

Figure 6 ROS Bar-Code

Table 1 ROS Bar Code

ROS Assembly Part No.	Set Value in NVM Location 760-211
062K 20841 (last digit: 1)	0 (default)
062K 2084* (last digit: except 1)	1

2. After replacement, perform [GP 8] Forced ADC Setup. TBD - no [GP 8] in Javelin need SME input

REP 6.3 Platen Glass

Parts List on PL 1.2

Removal

1. Switch off the power and disconnect the power cord.
2. Open the Platen Cover or DADF.
3. Remove the Platen Glass. (Figure 1)
   (1) Remove the screws (x2).
   (2) Remove the Right Side Plate.
   (3) Remove the Platen Glass.

Figure 1 Platen Glass Removal

Replacement

1. To install, carry out the removal steps in reverse order taking note of the following:

NOTE: *Push the Platen Glass in the direction of arrow A and the Right Side Plate in the direction of arrow B. (Figure 2)*

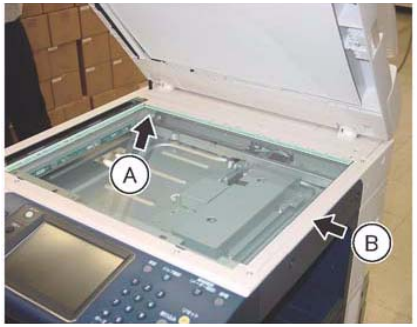

Figure 2 Platen Glass Positioning

REP 6.4 CCD Lens Assembly

Parts List on PL 1.2

Removal

NOTE: *Light axis correction using UI Diag is required after replacing the parts. After replacement, always check the light axis and perform the light axis correction adjustment where necessary. (The correction steps are described in this procedure.)*

1. Switch off the power and disconnect the power cord.
2. Remove the following parts:
   - Platen Glass (REP 6.3)
   - Lens Cover (PL 1.2)
3. Move the APS Sensor. (Figure 1)
   (1) Remove the screw.
   (2) Release the harness from the clamps (x3).
   (3) Move the APS Sensor.

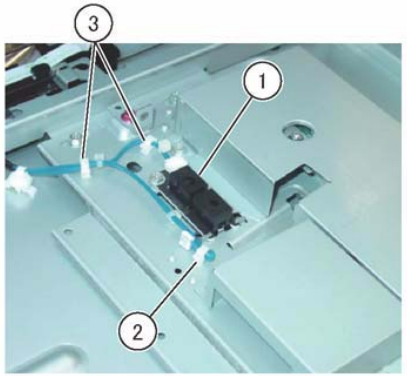

j0rk40112

Figure 1 APS Sensor

4. Disconnect the CCD Flexible Print Cable. (Figure 2)
   (1) Release the hook and disconnect the connector.

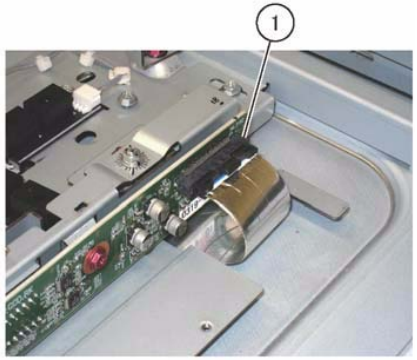

j0rk40113

Figure 2 CCD Flexible Print Cable

5. Replace the CCD Lens Assembly. (Figure 3)

   NOTE: *When removing the CCD Lens Assembly, never remove the screws (Red: x2) of the jig pin.*

   (1) Remove the screws (x4).
   (2) Replace the CCD Lens Assembly.
   (3) Secure the CCD Lens Assembly by using the screws (x4).

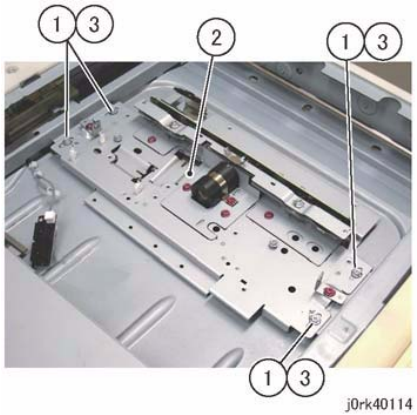

j0rk40114

Figure 3 CCD Lens Assy

6. Connect the CCD Flexible Print Cable.
7. Install the APS Sensor and Lens Cover.
8. Install the Platen Glass.
9. Perform ADJ 6.1.
10. Reinstall all removed parts.

REP 6.5 Front/Rear Carriage Cable

Parts List on PL 1.3

Removal

CAUTION

The burr at the edge of the IIT Frame might cause injury. Be very careful when disconnect the Carriage.

NOTE: *The front and rear coatings of the Carriage Cable are different.*

Front: Silver

Rear: Black

NOTE: *Only the replacement procedure for the Rear Carriage Cable is described here. The replacement procedures for the Front Carriage Cable is the same as for the Rear Carriage Cable.*

NOTE: *The Carriage Cables must be replaced one at a time. Never remove both front and rear cables at the same time.*

1. Switch off the power and disconnect the power cord.
2. Open the DADF or the Platen Cover.
3. Remove the following parts:
   - Platen Glass (REP 6.3)
   - Control Panel Assembly (REP 6.11)
   - IIT Left Cover (PL 1.1)
4. Take note of the installation position of the Front Support. (Figure 1)
   Mark position

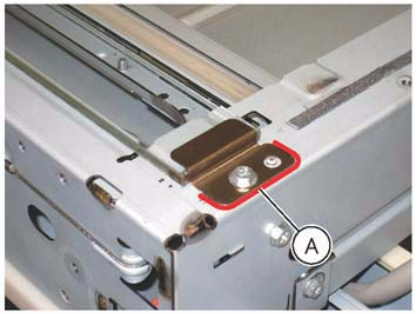

Figure 1 Front Support Installation Position

5. Remove the DADF Platen Glass. (Figure 2)
   (1) Remove the screw.
   (2) Remove the Front Support.
   (3) Remove the DADF Platen Glass.

   When installing, place it such that the Mark is at the rear.

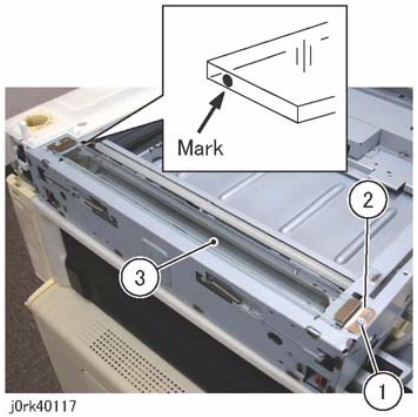

Figure 2 DADF Platen Glass Mark

6. Unfasten the Full Rate Carriage from the Carriage Cable. (Figure 3)
   (1) Move the Full Rate Carriage to the notch on the frame.
   (2) Remove the screw.

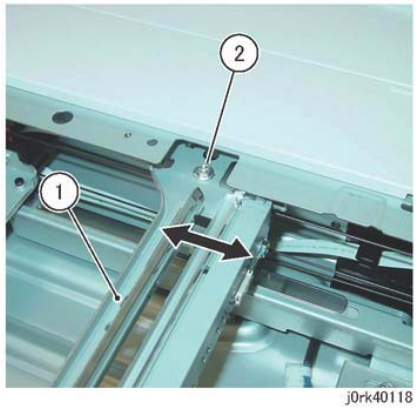

Figure 3 Full Carriage Cable

7. Remove the Carriage Cable. (Figure 4)
   (1) Remove the spring from the Frame.
   (2) Detach the cable from the spring.

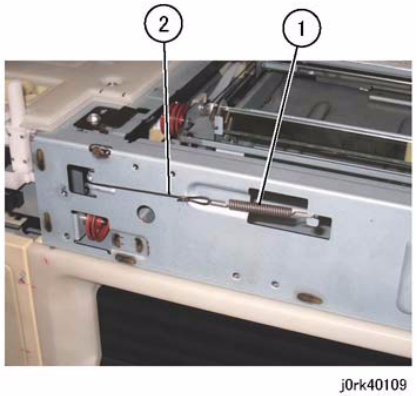

Figure 4 Carriage Cable Removal

8. Remove the Carriage Cable. (Figure 5)
   (1) Pull out the ball from the notch of the Frame and remove the Carriage Cable.

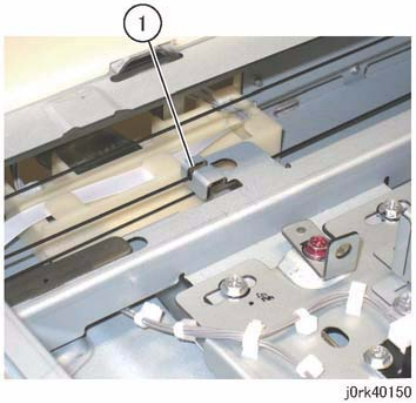

Figure 5 Carriage Cable Ball

Replacement

1. Insert the ball of the Carriage Cable into the groove of the pulley. (Figure 6)

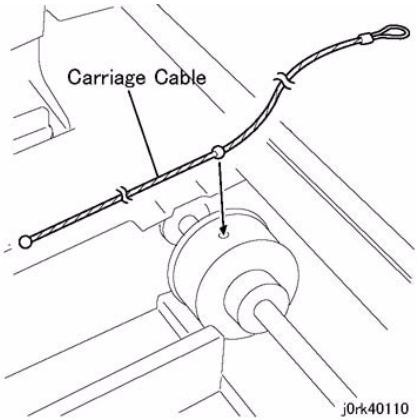

Figure 6 Carriage Cable

2. Wind the Carriage Cable at the spring end around the pulley for 2.5 rounds. (Figure 7)
   (1) Wind the cable 2.5 rounds.
   (2) Fix the cable at the spring end on the Frame with tape.

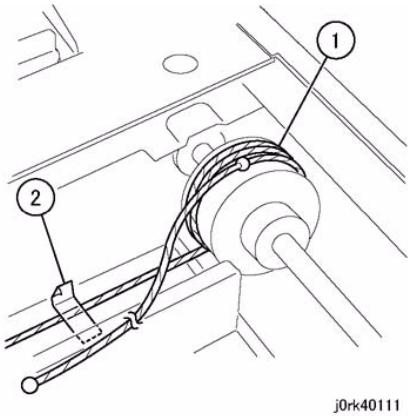

Figure 7 Winding Carriage Cable

3. Wind the Carriage Cable at the ball end around the pulley for 3 rounds. (Figure 8)
   (1) Wind the cable 3 rounds.
   (2) Fix the cable wound on the pulley with tape to prevent it from getting loose.

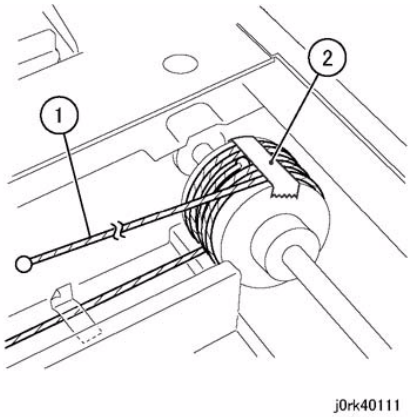

Figure 8 Taping Carriage Cable

The figure below shows the number of rounds made by Carriage Cable at the front and rear. (Figure 9)

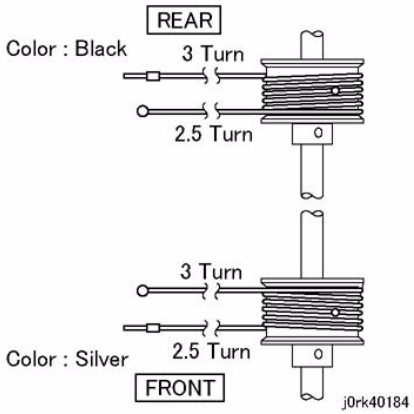

Figure 9 Front and Rear Carriage Cable

4. Install the ball end of the Carriage Cable. (Figure 10)
   (1) Hang the cable on the pulley at the front of the Half Rate Carriage.
   (2) Hang the ball on the notch of the Frame.

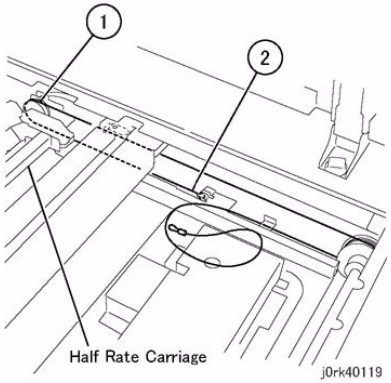

Figure 10 Installing Ball End

5. Install the spring end of the Carriage Cable. (Figure 11)
   (1) Peel off the tape that secures the cable.
   (2) Hang the cable on the pulley.
   (3) Hang it on the pulley at the rear of Half Rate Carriage.
   (4) Hang the spring on the Cable and attach it to the Frame.

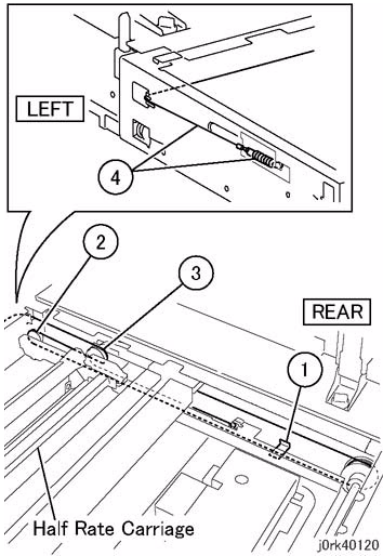

Figure 11 Carriage Cable Spring End

6. Affix the cable to the Full Rate Carriage. (Figure 12)
   (1) Peel off the tape.
   (2) Move the Full Rate Carriage to the notch on the frame.

(3) Affix the cable to the Full Rate Carriage.

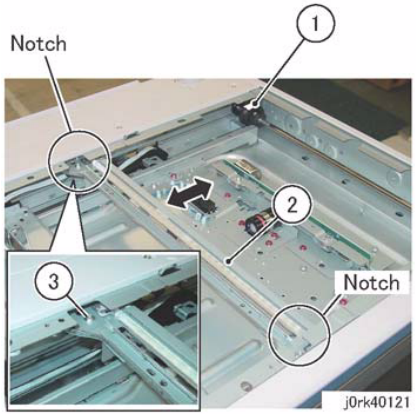

Figure 12 Full Rate Carriage

7. Adjust the position of Full Rate/Half Rate Carriages. (ADJ 6.2)
8. Restore the machine to its original state.

REP 6.6 LED Lamp PWB

Parts List on PL 1.4

Removal

NOTE: *Do not touch the chip on the LED Lamp PWB.*

1. Switch off the power and disconnect the power cord.
2. Open the Platen Cover or DADF.
3. Remove the Platen Glass. (REP 6.3)
4. Move the Full Rate Carriage to the notch on the Frame.
5. Disconnect the Lamp Wire Harness. (Figure 1)
   (1) Move the Block of the Connector Housing in the direction of the arrow.
   (2) Disconnect the Lamp Wire Harness.

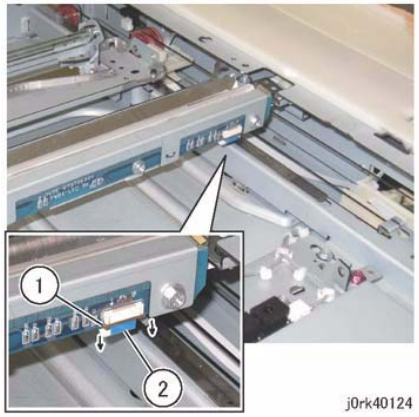

Figure 1 Disconnecting Lamp Wire Harness

6. Remove the LED Bracket. (Figure 2)
   (1) Remove the screws (x3).
   (2) Remove the LED Bracket.

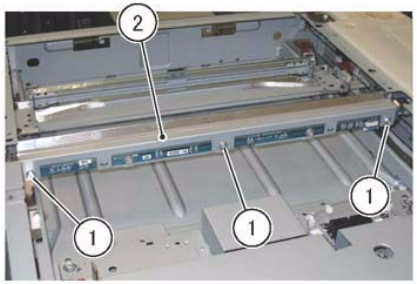

j0rk40127

Figure 2 LED Bracket

7. Remove the LED Lamp PWB. (Figure 3)
   (1) Remove the screws (x2).
   (2) Remove the LED Lamp PWB.

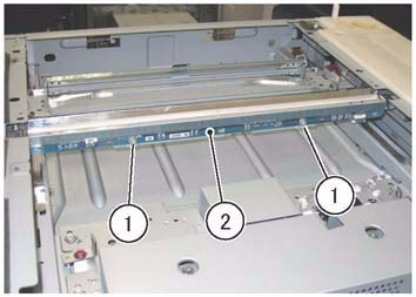

j0rk40125

Figure 3 LED Lamp PWB Removal

Replacement

1. To install, carry out the removal steps in reverse order.
2. When installing the LED Lamp PWB, tighten the screw in the order of 1 then 2. (Figure 4)
3. When installing the LED Bracket, tighten the screw in the order of 3 to 5. (Figure 4)

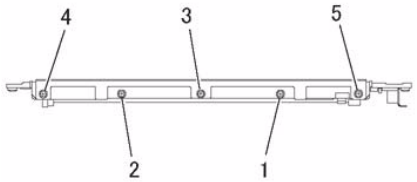

j0rk40126

Figure 4 LED Lamp PWB Tightening Sequence

REP 6.7 Lamp Wire Harness

Parts List on PL 1.2

Removal

1. Switch off the power and disconnect the power cord.
2. Remove the following parts:
   - Platen Cover or DADF Assembly (REP 5.1)
   - IIT Rear Cover (PL 1.1)
3. Disconnect the Lamp Wire Harness. (Figure 1)
   (1) Move the Block of the Connector Housing in the direction of the arrow.
   (2) Disconnect the Lamp Wire Harness.

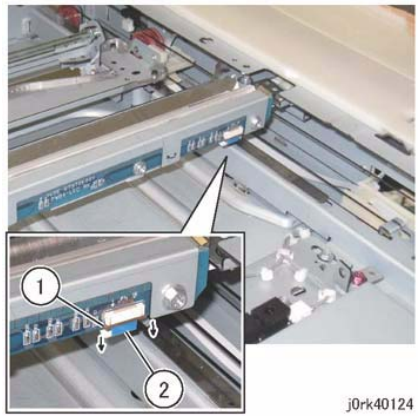

Figure 1 Lamp Wire Harness

4. Remove the Full Rate Carriage. (Figure 2)
   (1) Move the Full Rate Carriage to the notch on the frame.
   (2) Remove the screws (x2).
   (3) Remove the Full Rate Carriage.

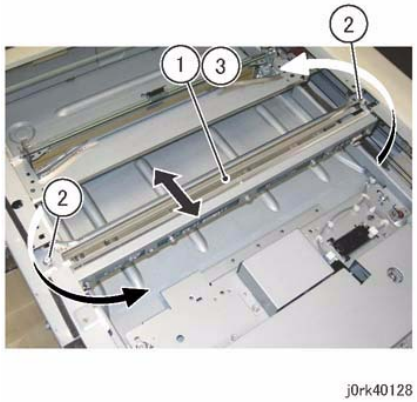

Figure 2 Full Rate Carriage Removal

5. Turn the Full Rate Carriage upside down.
6. Remove the Lamp Wire Harness from the Full Rate Carriage. (Figure 3)
   (1) Remove the Screw & Plate.
   (2) Remove the Lamp Wire Harness.

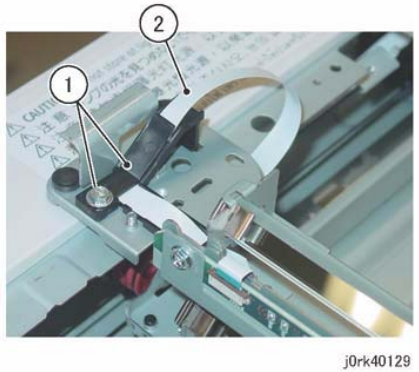

Figure 3 Full Rate Carriage Upside Down

7. Remove the Lamp Wire Harness from the Harness Guide of the Half Rate Carriage. (Figure 4)
   (1) Remove the Lamp Wire Harness from the guide.

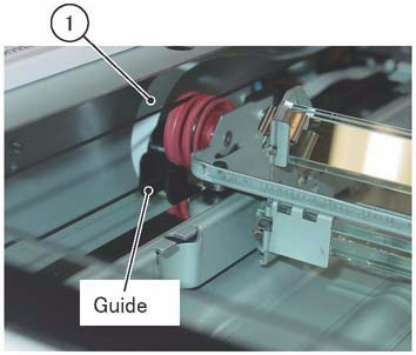

j0rk40130

Figure 4 Lamp Wire Harness Removal

8. Remove the Lamp Wire Harness from the guide. (Figure 5)
   (1) Remove the Lamp Wire Harness from the guide.

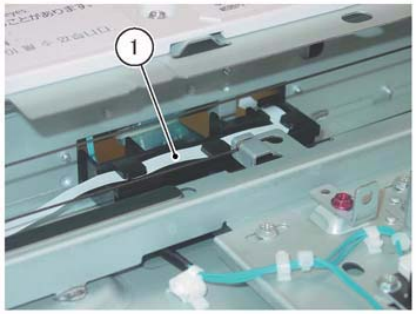

j0rk40131

Figure 5 Lamp Wire Harness Guide

9. Disconnect the Lamp Wire Harness from the IIT PWB. (Figure 6)
   (1) Move the Block of the Connector Housing in the direction of the arrow.
   (2) Disconnect the Lamp Wire Harness.

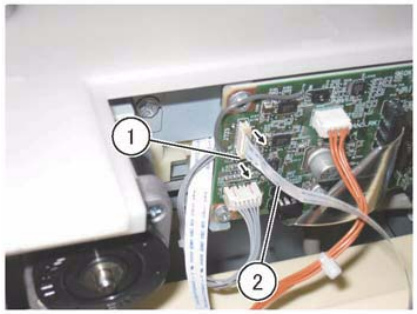

j0rk40132

Figure 6 IIT PWB

Replacement

1. To install, carry out the removal steps in reverse order.
2. Adjust the position of Full Rate/Half Rate Carriages. (ADJ 6.2)

REP 6.8 Light Guide

Parts List on PL 1.4

Removal

NOTE: *Do not touch the Light Guide using bare hands.*

1. Switch off the power and disconnect the power cord.
2. Remove the DADF. (REP 5.1)
3. Remove the Platen Glass. (REP 6.3)
4. Move the Full Rate Carriage to the notch on the Frame.
5. Remove the LED Bracket. (Figure 1)
   (1) Remove the screws (x3).
   (2) Remove the LED Bracket.

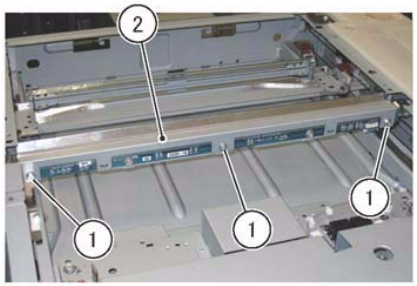

j0rk40127

Figure 1 LED Bracket Removal

6. Remove the Light Guide. (Figure 2)
   (1) Remove the screw.
   (2) Remove the Spring Guide.
   (3) Remove the screw.
   (4) Remove the Spring Guide.
   (5) Remove the Light Guide.

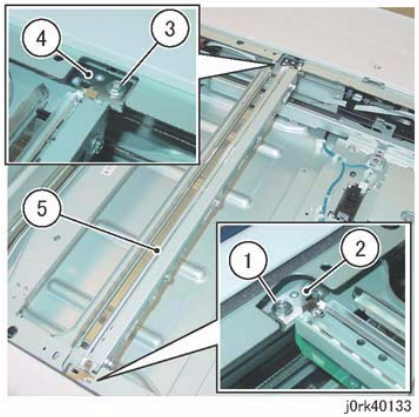

j0rk40133

Figure 2 Light Guide Removal

Replacement

1. To install, carry out the removal steps in reverse order.
2. When installing the Light Guide, insert the boss of the Light guide into the positioning hole of the Full Rate Carriage.

REP 6.9 Carriage Motor

Parts List on PL 1.6

Removal

1. Switch off the power and disconnect the power cord.
2. Remove the following parts:
   - DADF (REP 5.1)
   - Filter Cover (PL 19.2)
   - Rear Upper Cover (PL 19.3)
   - IIT Right Cover (PL 1.1)
   - IIT Rear Cover (PL 1.1)
   - IIT Top Cover (PL 1.1)
3. Remove the Carriage Motor. (Figure 1)
   (1) Disconnect the connector.
   (2) Remove the spring.
   (3) Remove the screws (x3).
   (4) Remove the Carriage Motor.

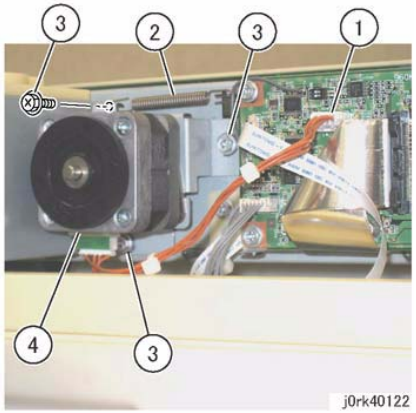

Figure 1 Carriage Motor Removal

Replacement

1. To install, carry out the removal steps in reverse order.
2. Install the Belt to the Pulley of the Carriage Motor. (Figure 2)

Figure 2 Belt Installation

3. Take note of the following points when installing the Carriage Motor.
   (1) Attach the spring.
   (2) Loosely affix the Carriage Motor that comes attached with a belt.
   (3) Move the carriage to fit the belt.
   (4) Secure the Carriage Motor to the Main Unit.
4. After installing the Carriage Motor, move the Full Rate Carriage back and forth and check that it is moving smoothly.

REP 6.10 IIT PWB

Parts List on PL 1.6

Removal

NOTE: *Backup the data before replacing the PWB. (GP 3) When restoring the data, first download the backup and then perform the firmware upgrade. (GP 3/GP 7)*

CAUTION

Static electricity may damage electrical parts. Always wear a wrist band during servicing. If a wrist band is not available, touch some metallic parts before servicing to discharge the static electricity.

1. Switch off the power and disconnect the power cord.
2. Remove the IIT Rear Cover. (Figure 1)
   (1) Remove the cover.
   (2) Disconnect the connectors (x2).
   (3) Remove the screws (x2).
   (4) Remove the IIT Rear Cover.

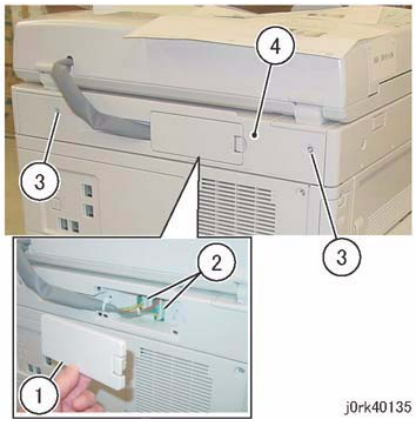

Figure 1 IIT Rear Cover Removal

3. Disconnect the connectors that are connected at the rear side to the IIT PWB. (Figure 2)
   (1) Unlock to disconnect the Connector (P7191).
   (Do not pull out the Harness directly.)
   (2) Move the block of the Connector Housing in the direction of the arrow and disconnect the Flat Cable.
   (3) Release the hook and disconnect the connector.
   (4) Disconnect the connectors (x5).

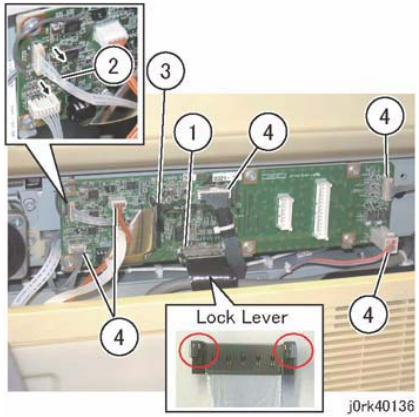

Figure 2 IIT PWB Connectors

4. Remove the IIT PWB. (Figure 3)
   (1) Remove the screws (x6).
   (2) Remove the IIT PWB.

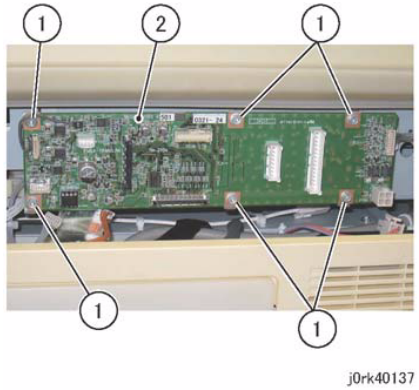

Figure 3 IIT PWB Removal

Replacement

1. To install, carry out the removal steps in reverse order.
2. When the PWB is replaced, remove the EEPROM from the old PWB and install it onto the new one. (Figure 4). Reload software (GP 9).

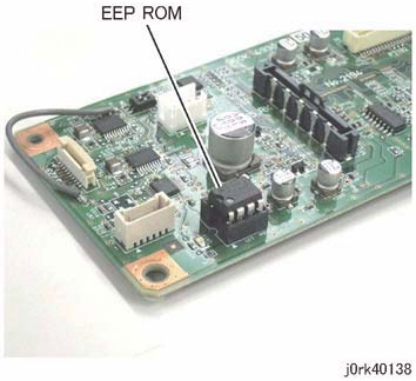

Figure 4 EEPROM

REP 6.11 Control Panel Assembly

Parts List on PL 1.7

Removal

1. Switch off the power and disconnect the power cord.
2. Open the Platen Cover or DADF.
3. Remove the screws that secure the Control Panel. (Figure 1)
   (1) Remove the screws (x2).

Figure 1 Control Panel Screws

4. Remove the screws that secure the Control Panel. (Figure 2)
   (1) Remove the screws (x2).

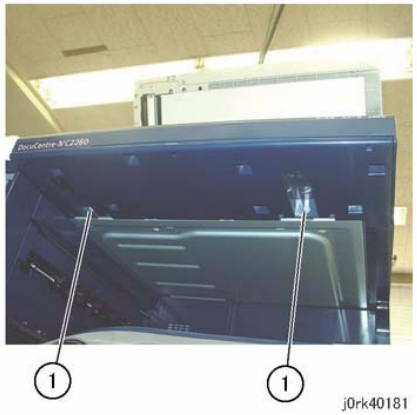

Figure 2 Control Panel Screws

5. Remove the Control Panel. (Figure 3)
   (1) Hold the Control Panel and slide it slowly to the front.
   (2) Release the UI Cable from the hooks.
   (3) Release the hook at the bottom of the Connector Housing and disconnect the connector.

(4) Disconnect the connector of the USB Cable.

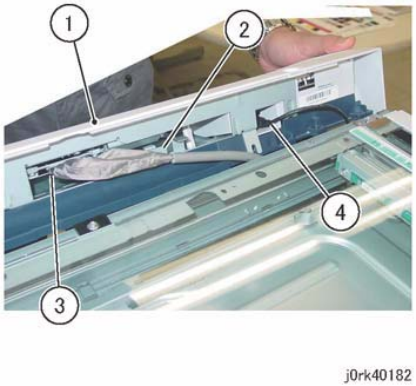

Figure 3 Control Panel Removal

6. Turn the Control Panel upside down.
7. Remove the Overlay Cover. (Figure 4)
   (1) Release the hooks (x3) of the Overlay Cover.
   (2) Remove the Overlay Cover in the direction of the arrow.

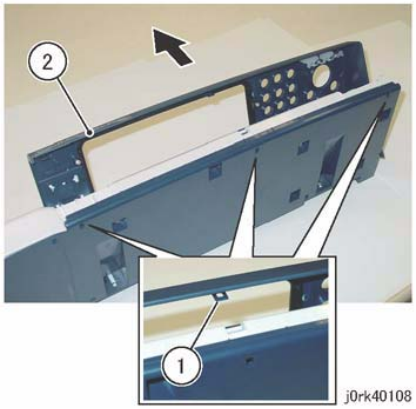

Figure 4 Overlay Cover Removal

8. Turn the Control Panel so that the screen is face up.
9. Remove the self-tapping screw that secures the UI Lower Cover. (Figure 5)

Figure 5 UI Lower Cover Removal

10. Turn the Control Panel upside down.
11. Remove the UI Lower Cover. (Figure 6)
    (1) Remove the self-tapping screws (x9).
    (2) Remove the UI Lower Cover.

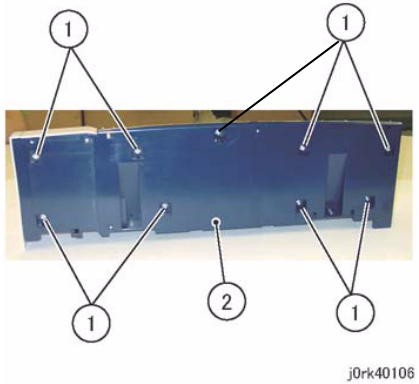

Figure 6 UI Lower Cover Removal

12. Remove the Base Frame. (Figure 7)
    (1) Remove the self-tapping screws (x7).
    (2) Remove the Base Frame.

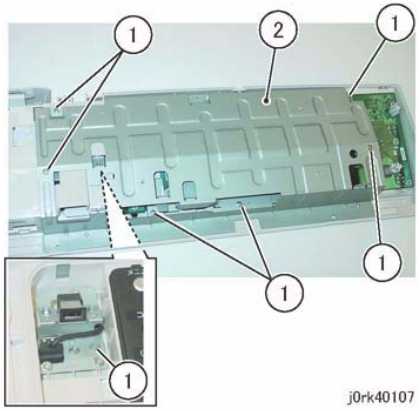

Figure 7 Base Frame Removal

Replacement

1. To install, carry out the removal steps in reverse order.

REP 7.1 Tray 1 Feeder Assembly

Parts List on PL 9.3

Removal

1. Switch off the power and disconnect the power cord.
2. Remove the following parts:
   - MSI (Tray 5) Unit (REP 7.9)
   - Rear Lower Cover (REP 14.4)
   - Left Rear Lower Cover (PL 19.2)
3. Pull out Tray 1 and remove the paper.
4. Remove Tray 1.
5. Remove the Feed Out Chute. (Figure 1)
   (1) Remove the Feed Out Chute.

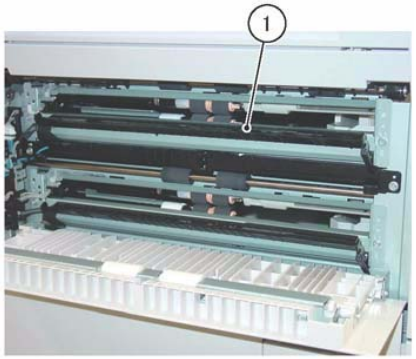

j0rk40901

Figure 1 Feed Out Chute Removal

6. Remove the Harness Cover. (Figure 2)
   (1) Remove the screws (2).
   (2) Remove the Harness Cover.

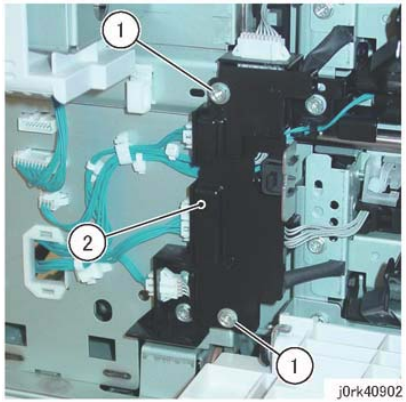

j0rk40902

Figure 2 Harness Cover Removal

7. Remove the Tray 1 Feeder Assembly. (Figure 3)
   (1) Disconnect the connectors (x2).
   (2) Remove the screws (x2).
   (3) Remove Tray 1 Feeder Assembly.

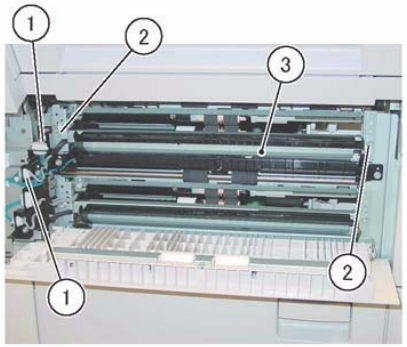

j0rk40903

Figure 3 Tray 1 Feeder Assy Removal

Replacement

1. To install, carry out the removal steps in reverse order.

REP 7.2 Tray 2 Feeder Assembly

Parts List on PL 9.3

Removal

1. Switch off the power and disconnect the power cord.
2. Remove the Rear Lower Cover. (REP 14.4)
3. Pull out Tray 2 and remove the paper.
4. Remove Tray 2.
5. Open the Left Lower Cover Assembly.
6. Remove the Feed Out Chute. (Figure 1)
   (1) Remove the Feed Out Chute.

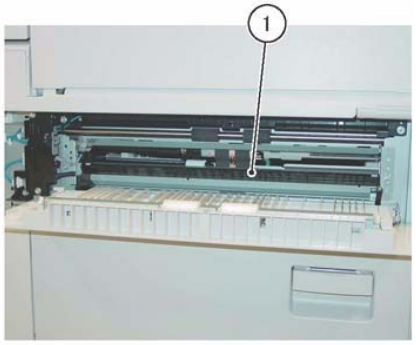

j0rk40904

Figure 1 Feed Out Chute

7. Remove the Harness Cover. (Figure 2)
   (1) Remove the screw(2).
   (2) Remove the Harness Cover.

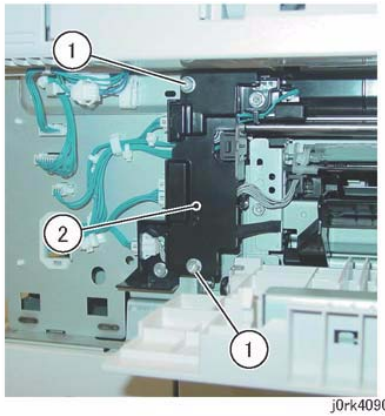

j0rk40905

Figure 2 Harness Cover

8. Remove the Tray 2 Feeder Assembly. (Figure 3)
   (1) Disconnect the connectors (x2).
   (2) Remove the screws (x2).
   (3) Remove Tray 2 Feeder Assembly.

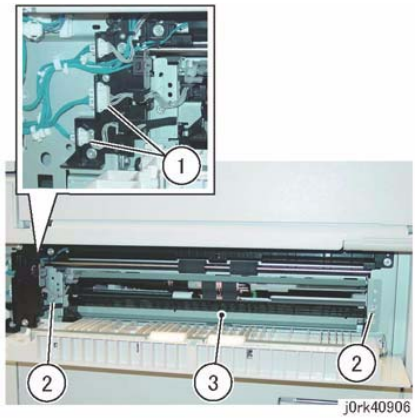

j0rk40906

Figure 3 Tray 2 Feeder Assy Removal

Replacement

1. To install, carry out the removal steps in reverse order.

REP 7.3 Tray 1 Feed/Retard/Nudger Roll

Parts List on PL 9.5

Removal

1. Switch off the power and disconnect the power cord.
2. Pull out Tray 1 and remove the paper.
3. Remove Tray 1.
4. Remove the Tray 1 Feed/Retard/Nudger Roll. (Figure 1)
   (1) Slide the chute towards you.
   (2) Remove the Tray 1 Feed/Retard/Nudger Roll.

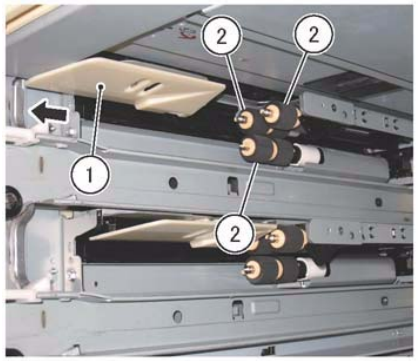

j0rk40907

Figure 1 Tray 1 Feed/Retard/Nudger Roll

Replacement

1. To install, carry out the removal steps in reverse order.
2. Enter the Diagnostic Mode (UI Diagnostic (CSE) Mode).
3. Select the **Maintenance Tab**.
4. Select dC135 **CRU/HSFI** and reset the Tray 1 Feed Roll count.

REP 7.4 Tray 2 Feed/Retard/Nudger Roll

Parts List on PL 9.5

Removal

1. Switch off the power and disconnect the power cord.
2. Pull out Tray 2 and remove the paper.
3. Remove Tray 2.
4. Remove the Tray 2 Feed/Retard/Nudger Roll. (Figure 1)
   (1) Slide the chute towards you.
   (2) Remove the Tray 2 Feed/Retard/Nudger Roll.

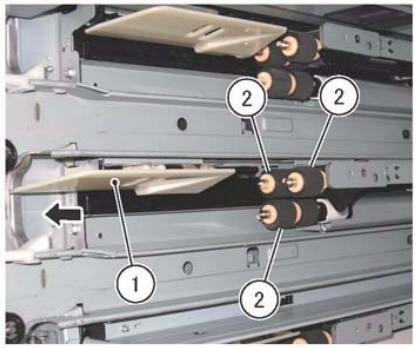

j0rk40908

Figure 1 Tray 1 Feed/Retard/Nudger Roll

Replacement

1. To install, carry out the removal steps in reverse order.
2. Enter the Diagnostic Mode (UI Diagnostic (CSE) Mode).
3. Select the **Maintenance Tab**.
4. Select dC135 **CRU/HSFI** and reset the Tray 2 Feed Roll count.

REP 7.5 Tray 3 Feeder Assembly

Parts List on PL 10.3

Removal

1. Switch off the power and disconnect the power cord.
2. Pull out Tray 3 and remove the paper.
3. Remove Tray 3.
4. Open the Tray Module L/H Cover Assembly.
5. Remove the Feed Out Chute and the Harness Cover. (Figure 1)
   (1) Remove the Feed Out Chute.
   (2) Remove the screw.
   (3) Remove the Harness Cover.

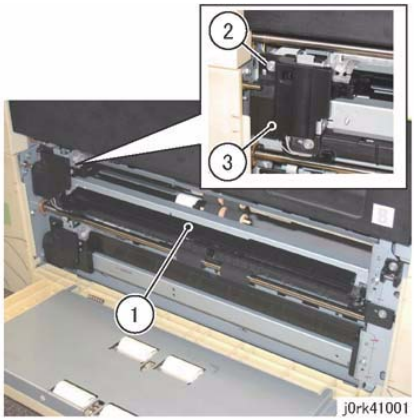

Figure 1 Feed Out Chute and the Harness Cover Removal

6. Disconnect the connector. (Figure 2)
   (1) Disconnect the connectors (x2).

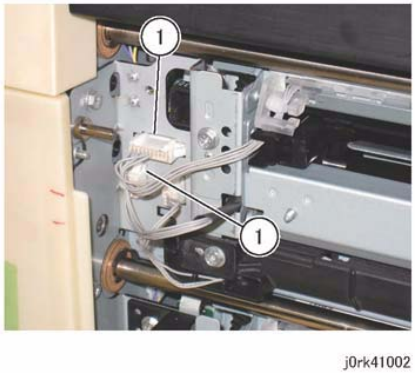

Figure 2 Disconnect Connectors

7. Remove the Tray 3 Feeder Assembly. (Figure 3)
   (1) Remove the screws (x2).
   (2) Remove Tray 3 Feeder Assembly.

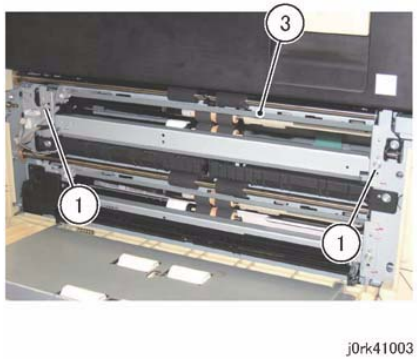

Figure 3 Tray 3 Feeder Assy Removal

Replacement

1. To install, carry out the removal steps in reverse order.

REP 7.6 Tray 4 Feeder Assembly

Parts List on PL 10.3

Removal

1. Switch off the power and disconnect the power cord.
2. Pull out Tray 4 and remove the paper.
3. Remove Tray 4.
4. Open the Tray Module Left Cover. (PL 10.8)
5. Remove the Take Away Roller 4. (Figure 1)
   (1) Remove the KL-Clip (x2).
   (2) Bearing
   (3) Remove the Take Away Roller 4.

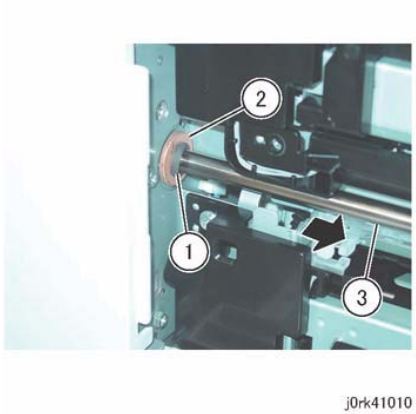

Figure 1 Take Away Roller 4 Removal

6. Remove the Feed Out Chute and the Harness Cover. (Figure 2)
   (1) Remove the Feed Out Chute.
   (2) Remove the screw.
   (3) Remove the Harness Cover.

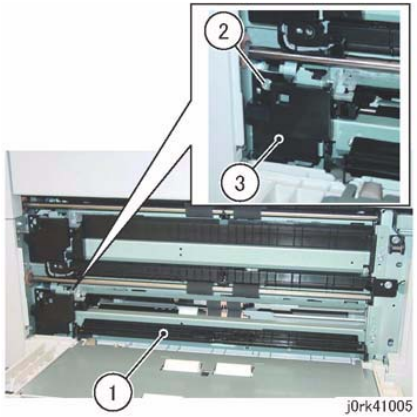

Figure 2 Feed Out Chute and the Harness Cover Removal

7. Disconnect the connector. (Figure 3)
   (1) Disconnect the connectors (x2).

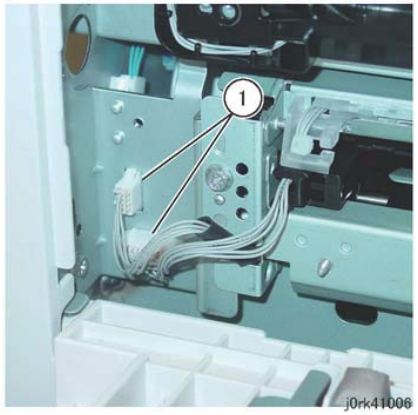

Figure 3 Disconnect Connectors

8. Remove the Tray 4 Feeder Assembly. (Figure 4)
   (1) Remove the screws (x2).
   (2) Remove Tray 4 Feeder Assembly.

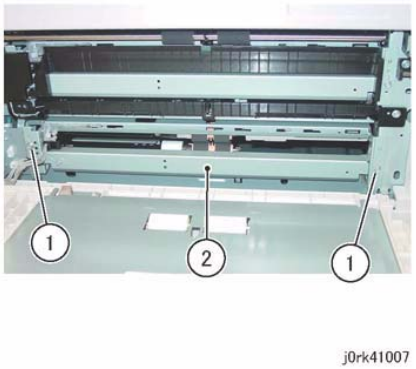

Figure 4 Tray 4 Feeder Assy Removal

Replacement

1. To install, carry out the removal steps in reverse order.

REP 7.7 Tray 3 Feed/Retard/Nudger Roll

Parts List on PL 10.5

Removal

1. Switch off the power and disconnect the power cord.
2. Pull out Tray 2 and Tray 3 and remove the paper.
3. Remove Tray 2 and Tray 3.
4. Remove the Tray 3 Feed/Retard/Nudger Roll. (Figure 1)
   (1) Slide the chute towards you.
   (2) Remove the Tray 3 Feed/Retard/Nudger Roll.

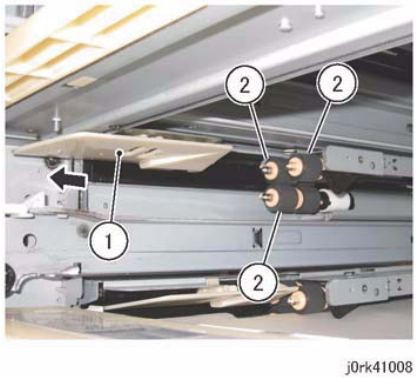

Figure 1 Tray 3 Feed/Retard/Nudger Roll Removal

Replacement

1. To install, carry out the removal steps in reverse order.
2. Enter the Diagnostic Mode (UI Diagnostic (CSE) Mode).
3. Select the **Maintenance Tab**.
4. Select dC135 **CRU/HSFI** and reset the Tray 3 Feed Roll count.

REP 7.8 Tray 4 Feed/Retard/Nudger Roll

Parts List on PL 10.5

Removal

1. Switch off the power and disconnect the power cord.
2. Pull out Tray 3 and Tray 4 and remove the paper.
3. Remove Tray 3 and Tray 4.
4. Remove the Tray 4 Feed/Retard/Nudger Roll. (Figure 1)
   (1) Slide the chute towards you.
   (2) Remove the Tray 4 Feed/Retard/Nudger Roll.

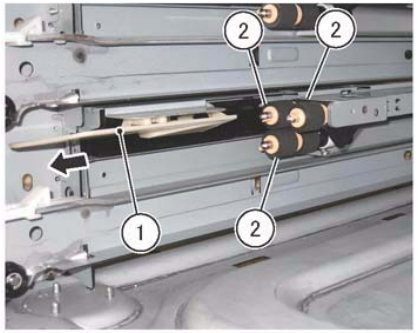

Figure 1 Tray 4 Feed/Retard/Nudger Roll Removal

Replacement

1. To install, carry out the removal steps in reverse order.
2. Enter the Diagnostic Mode (UI Diagnostic (CSE) Mode).
3. Select the **Maintenance Tab**.
4. Select dC135 **CRU/HSFI** and reset the Tray 4 Feed Roll count.

REP 7.9 MSI (Tray 5) Unit

Parts List on PL 13.1

Removal

1. Switch off the power and disconnect the power cord.
2. Remove the Rear Lower Cover. (REP 14.4)
3. Remove the LH Rear Lower. (PL 19.3)
4. Disconnect the connector. (Figure 1)
   (1) Remove the screw(2).
   (2) Remove the Harness Cover.
   (3) Disconnect the connector.

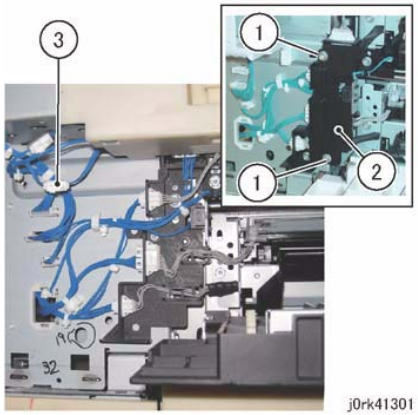

Figure 1 LH Rear Lower Cover

5. The maintenance position is with the L/H Cover Assembly open. (Figure 2)
   (1) Hang the pin of the L/H Cover Assembly at the maintenance position of the support.

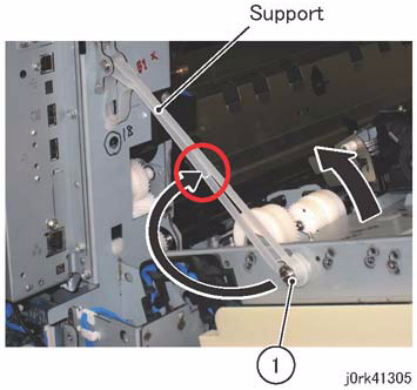

Figure 2 L/H Cover Assy at the Maintenance Position

6. Remove the MSI Unit. (Figure 3)
   (1) Remove the screws (x2).
   (2) Remove the MSI Unit.

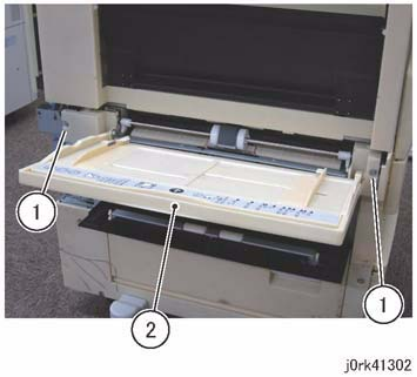

Figure 3 MSI Unit Removal

Replacement

1. To install, carry out the removal steps in reverse order.

   NOTE: *When installing the Left Rear Lower Cover, take care so as not to pinch the wire harness of the MSI Unit.*

2. Go to ADJ 7.1 Tray 5 (MSI) Side Guide Adjustment.

REP 7.10 MSI Feed Roll

Parts List on PL 13.2

Removal

1. Switch off the power and disconnect the power cord.
2. Open the MSI.
3. Remove the MSI Top Cover. (Figure 1)
   (1) Open the L/H Cover Unit.
   (2) Remove the screws (x2).
   (3) Close the L/H Cover Unit.
   (4) Remove the MSI Top Cover.

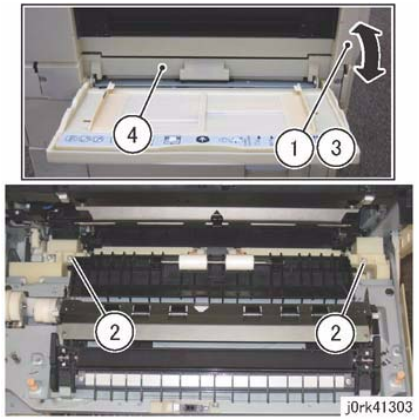

Figure 1 MSI Top Cover Removal

4. Remove the Feed Roll. (Figure 2)
   (1) Pinch the Hook and shift the Guide towards the front.
   (2) Remove the Feed Roll.

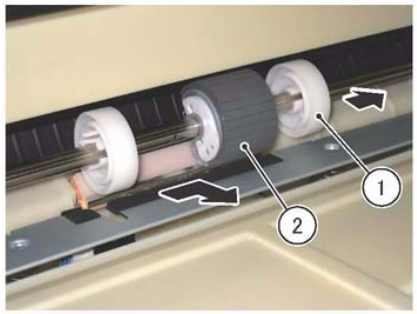

j0rk41304

Figure 2 Feed Roll Removal

Replacement

1. To install, carry out the removal steps in reverse order.
2. Enter the Diagnostic Mode (UI Diagnostic (CSE) Mode).
3. Select the **Maintenance Tab**.
4. Select dC135 **CRU/HSFI** and reset the MSI Feed Roll count.

REP 7.11 MSI Paper Size Sensor

Parts List on PL 13.3

Removal

1. Switch off the power and disconnect the power cord.
2. Gently extend the Extension Tray and pull it out. (Figure 1)
   (1) Remove the Extension Tray.

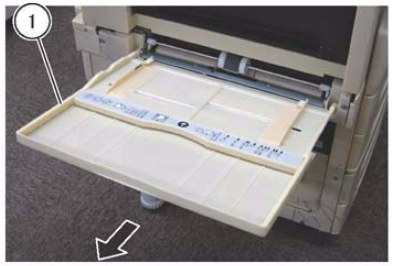

j0rk41306

Figure 1 Extension Tray Removal

3. Remove the plate. (Figure 2)
   (1) Remove the Tapping Screws (x3).
   (2) Remove the plate.

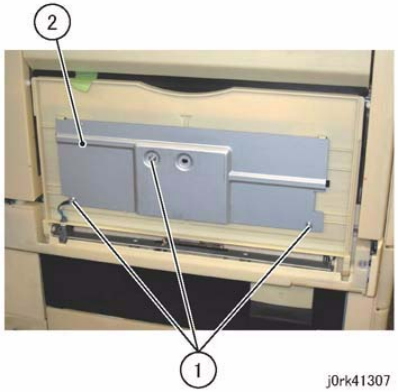

j0rk41307

Figure 2 Plate Removal

4. Remove the MSI Paper Size Sensor. (Figure 3)
   (1) Remove the Pinion Gear.
   (2) Remove the Tapping Screws (x3).

(3) Remove the MSI Paper Size Sensor.

(4) Release the wire harness from the MSI Paper Size Sensor.

(5) Disconnect the connector.

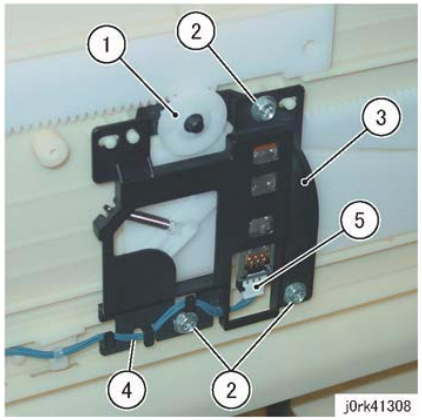

Figure 3 MSI Paper Size Sensor Removal

Replacement

1. To install, carry out the removal steps in reverse order taking note of the following:

   NOTE: *When installing the MSI Paper Size Sensor, make sure that the pin is inserted properly into the long hole of the Link. (Figure 4)*

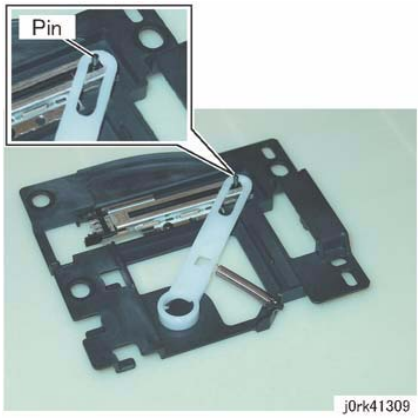

Figure 4 Pin Inserted in Long Hole of Link

NOTE: *When installing the Pinion Gear, align the marks on the Front/Rear Rack to the marks on the MSI Tray. (Figure 5)*

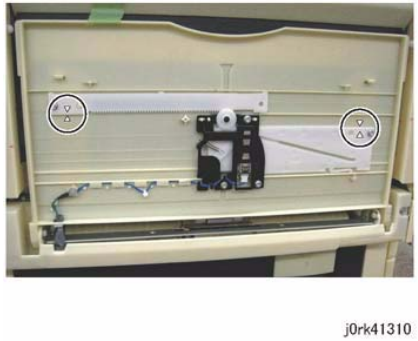

Figure 5 Pinion Gear Alignment

REP 8.1 Registration Transport Assembly

Parts List on PL 15.1

Removal

1. Switch off the power and disconnect the power cord.
2. Remove the MSI. (REP 7.9)
3. Remove the L/H Cover Unit. (REP 14.1)
4. Remove the Registration Transport Assembly. (Figure 1)
   (1) Remove the screw.
   (2) Remove the cover.
   (3) Disconnect the connector.
   (4) Remove the screws (x2).
   (5) Remove the Registration Transport Assembly.

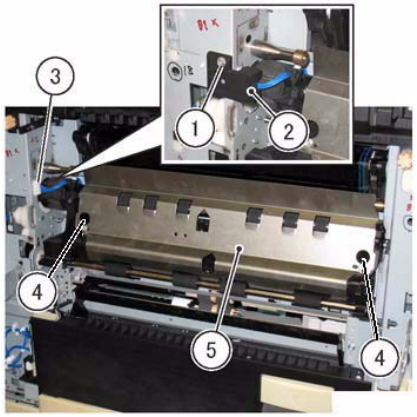

Figure 1 Reg Transport Assy Removal

Replacement

1. To install, carry out the removal steps in reverse order.

REP 8.2 Registration Idler Gear Assembly

Parts List on PL 15.1

Removal

1. Switch off the power and disconnect the power cord.
2. Remove the following parts:
   - SBC Chassis Assembly (REP 3.1)
3. Remove the Registration Idler Gear Assembly. (Figure 1)
   (1) Disconnect the connector.
   (2) Remove the screws (x2).
   (3) Remove the Registration Idler Gear Assembly.

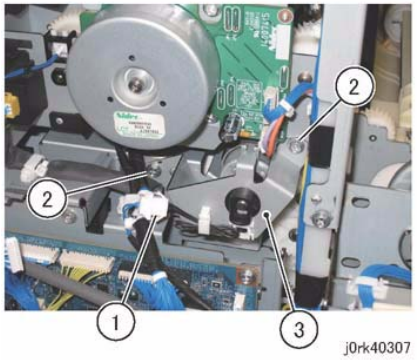

Figure 1 Reg Idler Gear Assy Removal

Replacement

NOTE: *As it is difficult to align the tabs (x4) of the bearing at the rear of the Registration Idler Gear Assembly to the holes of the Frame, perform the following:*

1. Remove the Main Drive Assembly. (REP 4.2)
2. Align the tabs (x4) of the bearing of the Registration Idler Gear Assembly to the holes of the Frame and temporarily affix the Registration Idler Gear Assembly. (Figure 2)

Figure 2 Reg Idler Gear Assy Alignment

3. Insert a portion of the Main Drive Assembly underneath the Registration Idler Gear Assembly and reinstall the Main Drive Assembly.
4. Reinstall the Registration Idler Gear Assembly. (Figure 3)

Figure 3 Reg Idler Gear Assy Install

5. After that, carry out the removal steps in reverse order.

REP 9.1 Toner Dispense Motor Assembly

Parts List on PL 5.1

Removal

1. Switch off the power and disconnect the power cord.
2. Remove the following parts:
   - Main Drive Assembly (REP 4.2)
   - SBC Chassis Assembly (REP 3.1)
   - Main LVPS (REP 1.1)
   - Link Guide Assembly (REP 4.3)
   - Fuser Drive Assembly (REP 4.4)
3. Remove the Sensor Assembly. (Figure 1)
   (1) Open the clamp.
   (2) Remove the screw.
   (3) Remove the Sensor Assembly.

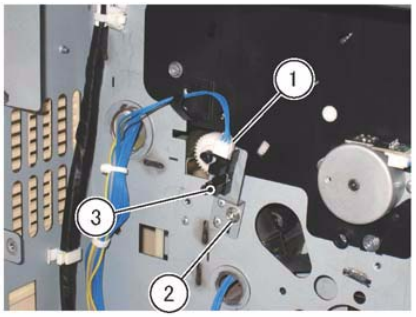

j0rk40501

Figure 1 Sensor Assy Removal

4. Remove the Toner Dispense Motor Assembly. (Figure 2)
   (1) Open the clamps (x4).
   (2) Disconnect the connectors (x2).
   (3) Remove the screws (x7).
   (4) Remove the Toner Dispense Motor Assembly.

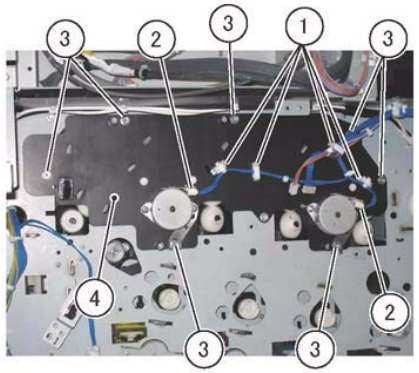

j0rk40502

Figure 2 Toner Dispense Motor Assy Removal

Replacement

1. To install, carry out the removal steps in reverse order.

REP 9.2 Dispenser Assembly (Y, M, C, K)

Parts List on PL 5.1

Removal

NOTE: *The removal procedure for Dispenser Assembly (Y, M, C, K) is partially different for (Y) compared to (M, C, K). Therefore, the procedures for (Y) and (K) are listed here.*

NOTE: *When removing the Drum, cover it with a black sheet to prevent light fatigue.*

NOTE: *Do not touch the Drum surface with your hands.*

NOTE: *Place paper under the Dispenser Assembly (Y, M, C, K) and on the floor so that the toner, etc. do not dirty the floor and the machine during servicing.*

1. Switch off the power and disconnect the power cord.
2. Remove the following parts:
   - Drum (Y, M, C, K) (REP 9.8)
   - Toner Cartridge (Y, M, C, K) (PL 5.1)
   - Transfer Belt Cleaner Assembly (REP 9.5)
   - HVPS (REP 1.2)
3. Open the L/H Cover Unit.
4. Remove the Front Cover together with the Inner Cover. (Figure 1)
   (1) Remove the screws (x6).
   (2) Remove the Front Cover together with the Inner Cover.

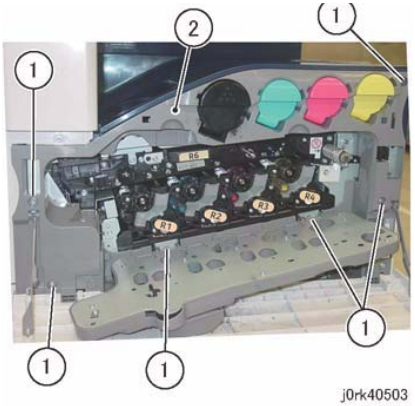

Figure 1 Front Cover Removal

5. Remove the IBT Cleaner Guide. (Figure 2)
   (1) Remove the screw.
   (2) Remove the IBT Cleaner Guide.

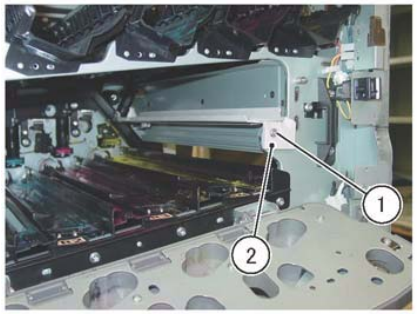

Figure 2 IBT Cleaner Guide Removal

6. Shift the High Voltage Conductor Housing Assembly. (Figure 3)
   (1) Remove the screw.
   (2) Shift the High Voltage Conductor Housing Assembly.

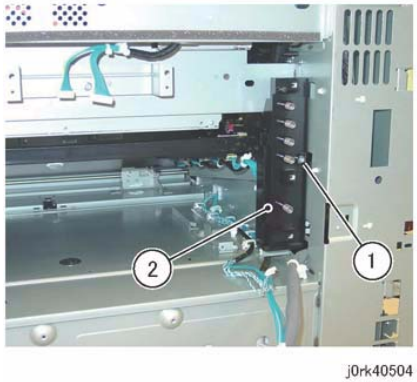

Figure 3 High Voltage Conductor Housing Assy

7. Remove the Dispenser Assembly (K). (Figure 4)
   (1) Remove the screw.
   (2) Remove the stopper.
   (3) Remove the screw.
   (4) Remove the Dispenser Assembly (K).

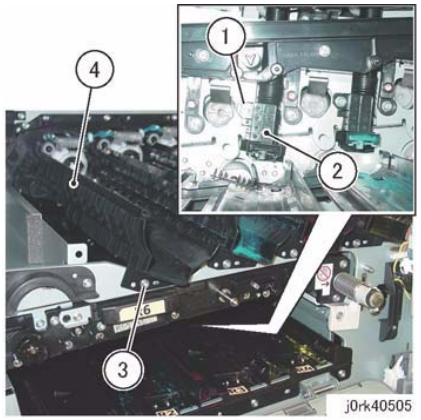

Figure 4 Dispenser Assy (K) Removal

8. Remove the Dispenser Assembly (C) by referring to Step 6.
9. Remove the Dispenser Assembly (M) by referring to Step 6.
10. Remove the Dispenser Assembly (Y). (Figure 5)
    (1) Remove the stopper.
    (2) Remove the screw.
    (3) Remove the Dispenser Assembly (Y).

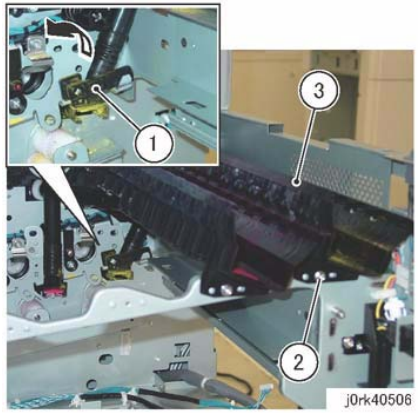

Figure 5 Dispenser Assembly (Y) Removal

Replacement

1. To install, carry out the removal steps in reverse order.

   NOTE: *When installing the High Voltage Conductor Housing Assembly, make sure that the tab at the left is inserted properly into the hole of the Frame.*

REP 9.3 Dispense Drive Cover Assembly

Parts List on PL 5.1

Removal

NOTE: *When removing the Drum, cover it with a black sheet to prevent light fatigue.*

NOTE: *Do not touch the Drum surface with your hands.*

NOTE: *Place paper under the Dispenser Assembly (Y, M, C, K) and on the floor so that the toner, etc. do not dirty the floor and the machine during servicing.*

1. Switch off the power and disconnect the power cord.
2. Remove the following parts:
   - Drum (Y, M, C, K) (REP 9.8)
   - Toner Cartridge (Y, M, C, K) (PL 5.1)
   - Transfer Belt Assembly (REP 9.4)
   - HVPS (REP 1.2)
   - Dispenser Assembly (Y, M, C, K) (REP 9.2)
3. Remove the harness from the Dispense Drive Cover Assembly. (Figure 1)
   (1) Disconnect the connectors (x4).
   (2) Open the clamps (x4).
   (3) Remove the clamps (x3).

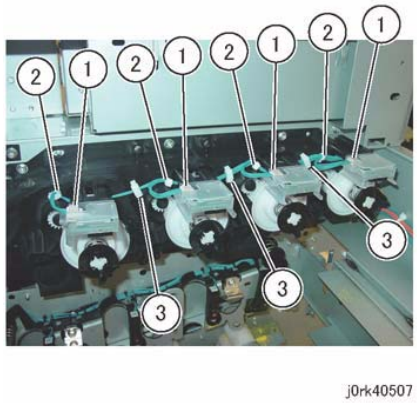

Figure 1 Dispense Drive Cover Assy Harness

4. Remove the Dispense Drive Cover Assembly. (Figure 2)
   (1) Remove the screws (x5).
   (2) Remove the Dispense Drive Cover Assembly.

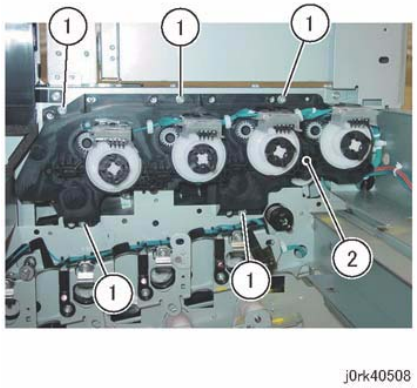

Figure 2 Dispense Drive Cover Assy Removal

Replacement

1. To install, carry out the removal steps in reverse order.

REP 9.4 Transfer Belt Assembly - see TBD note

Parts List on PL 6.1

Removal

NOTE: *After removing the Transfer Belt Unit, close the IOT Covers then proceed with the procedure, in order to protect the Drum from light shock.*

NOTE: *Do not touch the Transfer Belt surface with your hands.*

NOTE: *When placing the Transfer Belt Unit on the floor, spread paper or sheets, etc. on the floor beforehand to ensure that dirt or dust do not get stuck to the Transfer Belt.*

1. Switch off the power and disconnect the power cord.
2. Open the LH Cover Unit.
3. Open the Front Cover.
4. Remove the Waste Bottle.
5. Turn the Lock Lever and open the Drum Cover.
6. Remove the Transfer Belt Unit. (Figure 1)

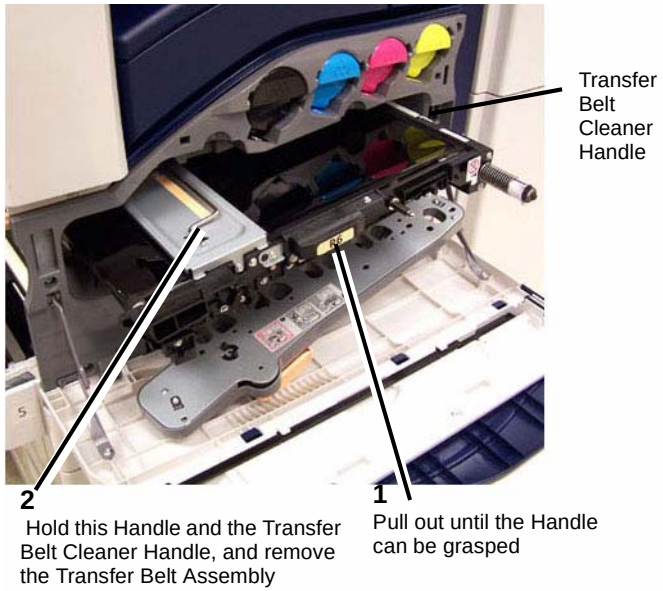

Figure 1 Transfer Belt Unit Removal

Replacement

1. To install, carry out the removal steps in reverse order.
2. Go to dC135 and reset the counter.
3. After replacement, perform [GP 8] Forced ADC Setup. TBD - there is no [GP 8] in Javelin. Need SME input.

REP 9.5 Transfer Belt Cleaner Assembly

Parts List on PL 6.1

Removal

NOTE: *After removing the Transfer Belt Unit, close the IOT Covers then proceed with the procedure, in order to protect the Drum from light shock.*

NOTE: *Do not touch the Transfer Belt surface with your hands.*

NOTE: *When placing the Transfer Belt Unit on the floor, spread paper or sheets, etc. on the floor beforehand to ensure that dirt or dust do not get stuck to the Transfer Belt.*

1. Switch off the power and disconnect the power cord.
2. Remove the following parts:
   - Transfer Belt Assembly (REP 9.4)
3. Remove the Transfer Belt Cleaner Assembly. (Figure 1)
   (1) Remove the screw.
   (2) Remove the Transfer Belt Cleaner Assembly.

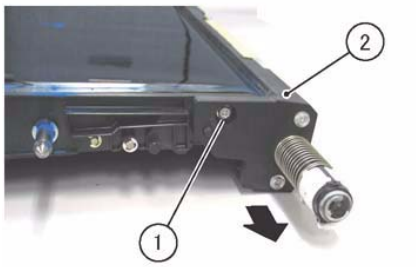

j0rk40602

Figure 1 Transfer Belt Cleaner Assy Removal

Replacement

1. To install, carry out the removal steps in reverse order.

REP 9.6 2nd BTR Roll Assembly

Parts List on PL 6.1

Removal

1. Switch off the power and disconnect the power cord.
2. Open the L/H Cover Unit.
3. Remove the 2nd BTR Roll Assembly. (Figure 1)
   (1) Remove the Screws (x2).
   (2) Remove the 2nd BTR Roll Assembly.

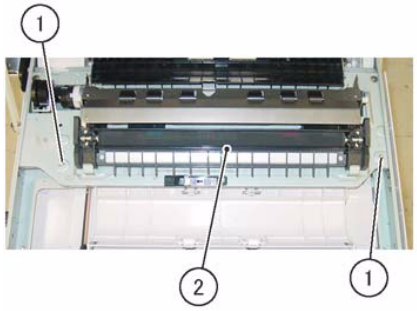

j0rk41405

Figure 1 2nd BTR Roll Assy Removal

Replacement

1. To install, carry out the removal steps in reverse order.

   NOTE: *When installing the 2nd BTR Roll Assembly, align it to the Half Patch of the Frame.*

2. Go to dC135 and reset the Counter.

REP 9.7 Transfer Belt

Parts List on PL 6.2

Removal

NOTE: *After removing the Transfer Belt Unit, close the machine covers, etc. to protect the Drum from light shock before proceeding with the procedure.*

NOTE: *Do not touch the Transfer Belt surface with your hands.*

1. Switch off the power and disconnect the power cord.
2. Remove the following parts:
   - Transfer Belt Assembly (REP 9.4)
   - Transfer Belt Cleaner Assembly (REP 9.5)
3. Remove the Knob. (Figure 1)
   (1) Remove the screws (2).
   (2) Remove the Knob.

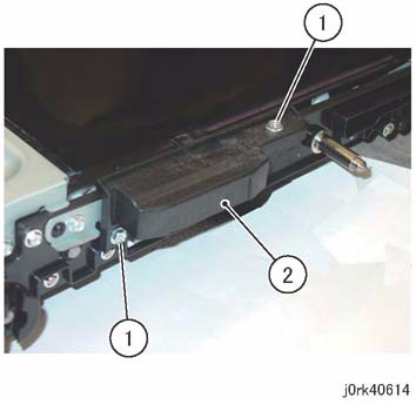

Figure 1 Knob Removal

4. Remove the Plate Handle. (Figure 2)
   (1) Remove the screws (x2).
   (2) Remove the Plate Handle.

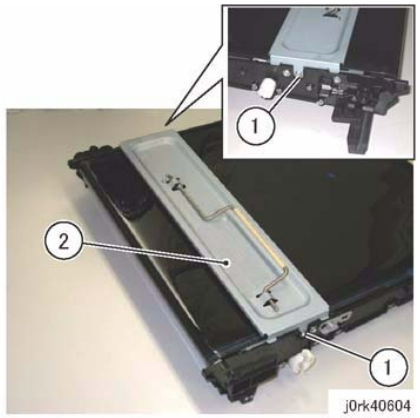

Figure 2 Plate Handle Removal

5. Remove the guide. (Figure 3)
   (1) Remove the screws (x2).
   (2) Remove the guide.

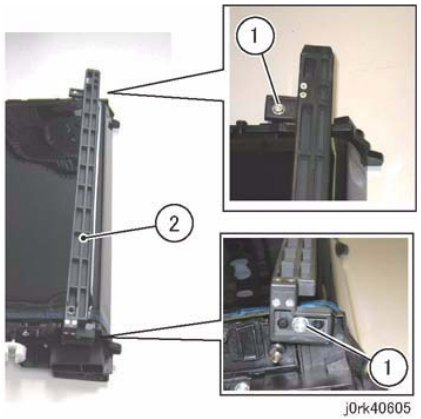

Figure 3 Guide Removal

6. Remove the Tension Plate. (Figure 4)
   (1) Remove the screw.
   (2) Remove the Tension Plate.

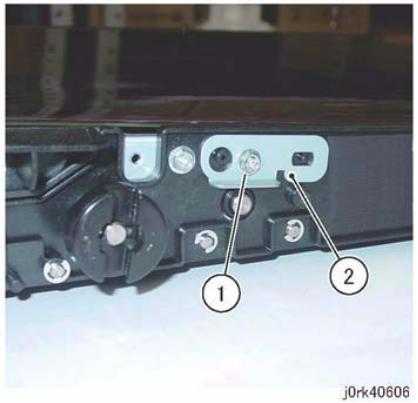

Figure 4 Tension Plate Removal

7. Install the Guide removed in step 4 on the Frame. (Figure 5)
   (1) Attach the Guide to the Frame.
   (2) Secure with the screw.

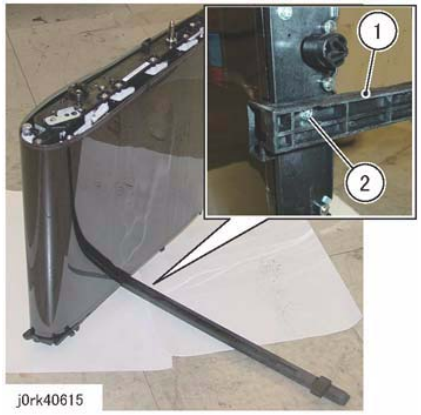

Figure 5 Guide Install

8. Switch the Tension Plate that was removed in Step 5. (Figure 6)
   (1) Install the Tension Plate between the shaft and the pin.

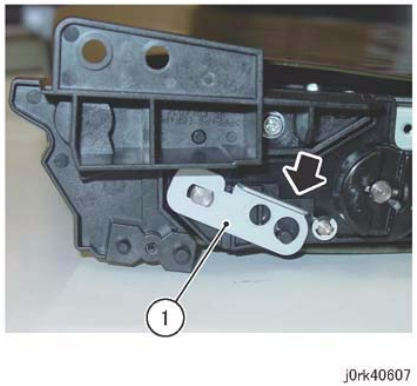

Figure 6 Tension Plate Install

9. Remove the BUR Front Frame. (Figure 7)
   (1) Remove the screw.
   (2) Remove the BUR Front Frame & BUR Bearing.

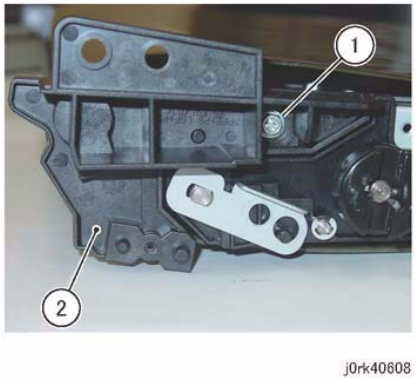

Figure 7 BUR Front Frame Removal

10. Remove the Backup Roll. (Figure 8)
    (1) Remove the Backup Roll and Bearing.

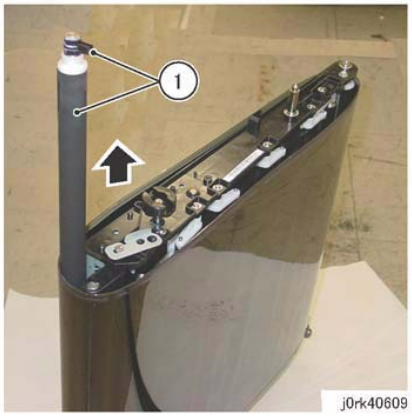

Figure 8 Backup Roll and Bearing Removal

11. Remove the Transfer Belt. (Figure 9)
    (1) Remove the Transfer Belt.

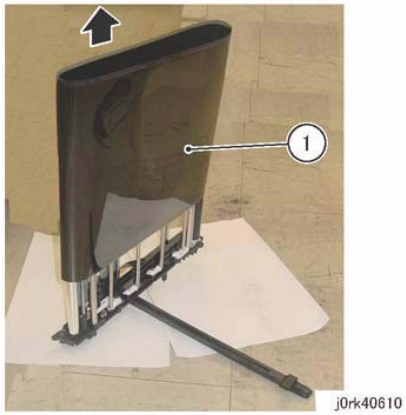

Figure 9 Transfer Belt Removal

Replacement

1. To install, carry out the removal steps in reverse order taking note of the following:

   NOTE: *When installing the Transfer Belt, install it with the marked side at the rear.*

2. Go to dC135 and reset the Counter.

REP 9.8 Drum Cartridge (Y,M,C,K)

Parts List on PL 8.1

Removal

NOTE: *When removing the Drum, cover it with a black sheet to prevent light fatigue.*

NOTE: *Do not touch the Drum surface with your hands.*

1. Switch off the power and disconnect the power cord.
2. Open the Front Cover.
3. Remove the Waste Bottle Assembly.
4. Turn the Lock Lever and open the Drum Cover.
5. Remove the drum. (Figure 1)
   (1) Pinch the tab of the Drum to pull out and remove the Drum.

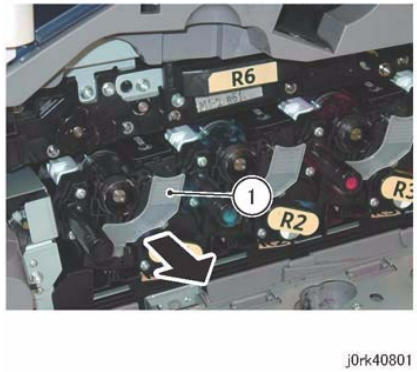

Figure 1 Drum Tab

Replacement

1. To install, carry out the removal steps in reverse order.

   NOTE: *When installing the Drums (Y, M, C, K) install them in the order of Drum (K), Drum (C), Drum (M), and Drum (Y).*

REP 9.9 CRU Reader

Parts List on PL 8.2

Removal

NOTE: *When removing the Drum, cover it with a black sheet to prevent light fatigue.*

NOTE: *Do not touch the Drum surface with your hands.*

1. Switch off the power and disconnect the power cord.
2. Remove the following parts:
   - Drum (Y, M, C, K) (REP 9.8)

CAUTION

The ROS is delicate; pay attention to the Cautions in REP 6.2!

   - ROS Assembly (REP 6.2)
3. Open the L/H Cover Unit.
4. Remove the Front Cover together with the Inner Cover. (Figure 1)
   (1) Remove the screws (x6).
   (2) Remove the Front Cover together with the Inner Cover.

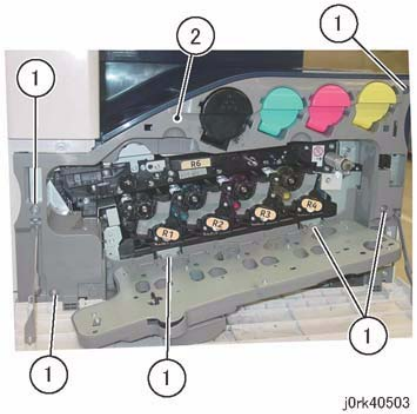

Figure 1 Front and Inner Cover Removal

5. Disconnect the connector. (Figure 2)
   (1) Disconnect the connector.

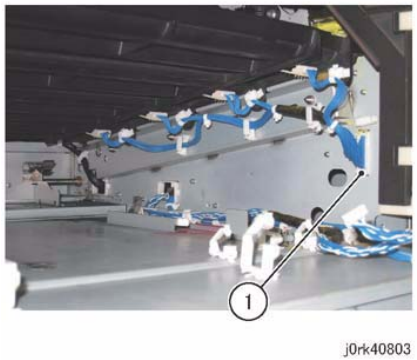

Figure 2 Disconnect Connector

6. Remove the Drum Guide Assembly. (Figure 3)
   (1) Remove the screws (x4).
   (2) Remove the Drum Guide Assembly.

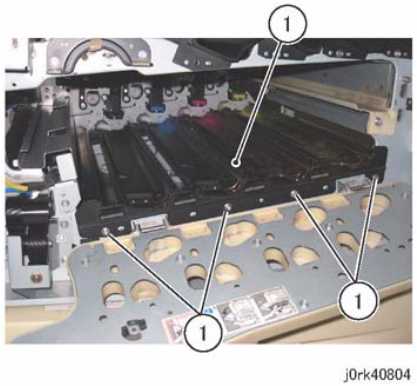

Figure 3 Drum Guide Assy Removal

7. Remove the CRU Reader. (Figure 4)
   (1) Remove the CRUM.
   (2) Remove the CRU Reader.

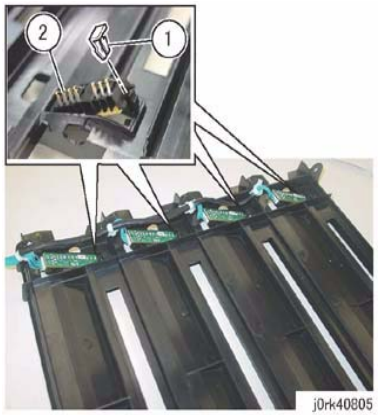

Figure 4 CRU Reader Removal

Replacement

1. To install, carry out the removal steps in reverse order.

REP 9.10 MOB ADC Assembly - see TBD note

Parts List on PL 18.2

Removal

1. Switch off the power and disconnect the power cord.
2. Open the L/H Cover Unit.
3. Remove the Front Cover together with the Inner Cover. (Figure 1)

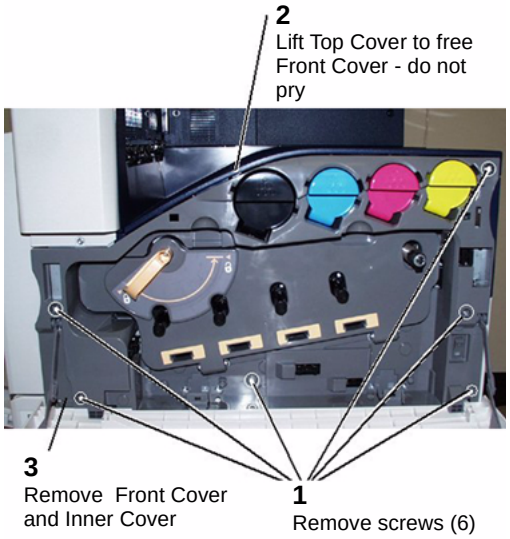

Figure 1 Front and Inner Cover Removal

NOTE: *When removing the Drum Cartridges, cover with a black sheet to prevent light fatigue.*

NOTE: *Do not touch the Drum surface with your hands.*

4. Remove the following parts:
   a. Drum Cartridges (REP 9.8)
   b. Transfer Belt Assembly (REP 9.4)
5. Remove the Gear Assembly. (Figure 2)
   (1) Remove the screws (x3).
   (2) Remove the Gear Assembly.

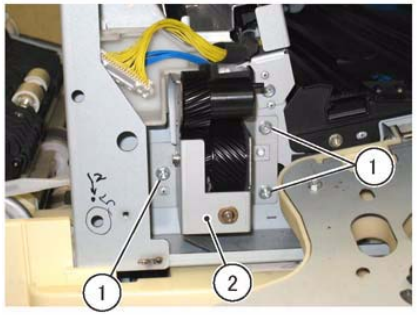

j0rk41811

Figure 2 Gear Assy Removal

6. Remove the Harness Guide. (Figure 3)
   (1) Disconnect the connector.
   (2) Open the clamps.
   (3) Remove the screw.
   (4) Remove the Harness Guide.

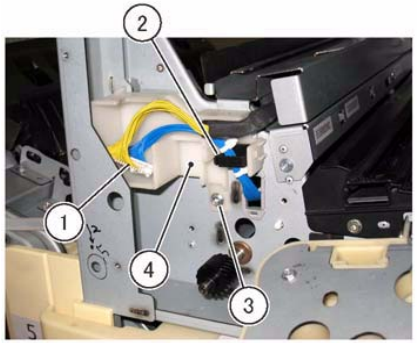

j0rk41812

Figure 3 Harness Guide Removal

7. Remove the IBT Guide. (Figure 4)
   (1) Remove the screw.
   (2) Remove the IBT Guide.

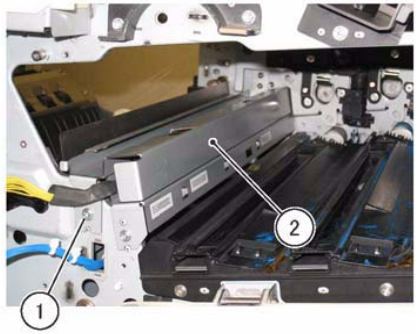

j0rk41813

Figure 4 IBT Guide Removal

8. Remove the MOB/ADC Assembly. (Figure 5)
   (1) Remove the screw.
   (2) Remove the MOB/ADC Assembly.

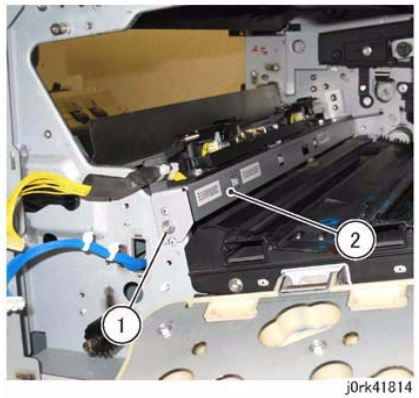

j0rk41814

Figure 5 MOB ADC Assy Removal

Replacement

NOTE: *If installing a new assembly then both 18-digit numbers should be recorded before installation (Figure 6)*

1. To install, perform the removal steps in reverse order.
2. After replacing the MOB ADC Sensor Assembly, enter in the NVMs the numbers stated on the bar-code label attached to the MOB ADC Sensor Assembly. (Figure 6)
   a. Front ADC-Sensor

Seeing Table 1, divide the 18-digit number into 3-digit numbers and read and enter them in their respective NVMs.

b. Rear ADC-Sensor

Seeing Table 2, divide the 18-digit number into 3-digit numbers and read and enter them in their respective NVMs. TBD - the NVM locations are not correct for Javelin per FS 23.216. Need SME input.

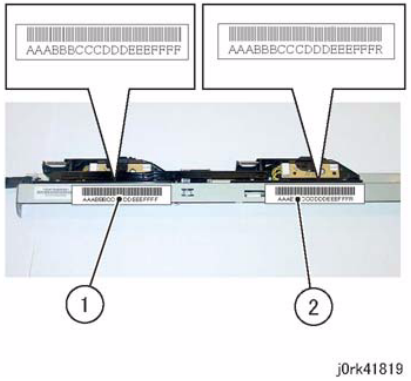

Figure 6 NVM Bar Code

Table 1 NVM Front

Chain-Link	NVM Name	Input Value (reading position)
752-269	ADC CODE_Vref_off	AAA
752-271	ADC CODE_Vstd	BBB
752-273	ADC CODE_Vref	CCC
752-275	ADC CODE_Vm_off	DDD
752-277	ADC CODE_Vm1	EEE
752-279	ADC CODE_Vm2	FFF

Table 2 NVM Rear

Chain-Link	NVM Name	Input Value (reading position)
752-270	ADC CODE_Vref_off	AAA
752-272	ADC CODE_Vstd	BBB
752-274	ADC CODE_Vref	CCC
752-276	ADC CODE_Vm_off	DDD
752-278	ADC CODE_Vm1	EEE
752-280	ADC CODE_Vm2	FFF

3. After replacement, perform [GP 8] Forced ADC Setup. TBD - no [GP 8] in Javelin. Need SME input.

REP 9.11 Erase Lamp (Y, M, C, K)

Parts List on PL 8.1

Removal

NOTE: *When removing the Drum, cover it with a black sheet to prevent light fatigue.*

NOTE: *Do not touch the Drum surface with your hands.*

NOTE: *Place paper under the Dispenser Assembly (Y, M, C, K) and on the floor so that the toner, etc. do not dirty the floor and the machine during servicing.*

1. Switch off the power and disconnect the power cord.
2. Remove the following parts:
   - Drum (Y, M, C, K) (REP 9.8)
   - Transfer Belt Assembly (REP 9.4)
   - HVPS (REP 1.2)
3. Remove the IBT Cleaner Guide. (Figure 1)
   (1) Remove the screw.
   (2) Remove the IBT Cleaner Guide.

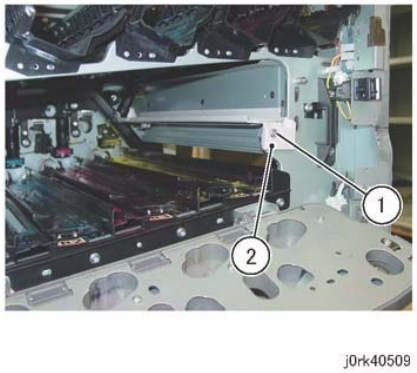

Figure 1 IBT Cleaner Guide Removal

4. Remove the Panel. (Figure 2)
   (1) Disconnect the connector.
   (2) Release the clamps (x3).
   (3) Remove the screws (x4).
   (4) Remove the Panel.

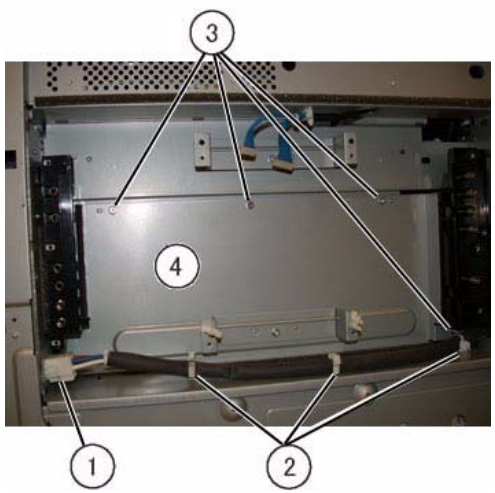

Figure 2 HVPS Panel Removal

5. Shift the High Voltage Conductor Housing Assembly (Figure 3 and Figure 4).
   (1) Remove the screw (1).
   (2) Rotate the High Voltage Conductor Housing Assembly and move to the front. .

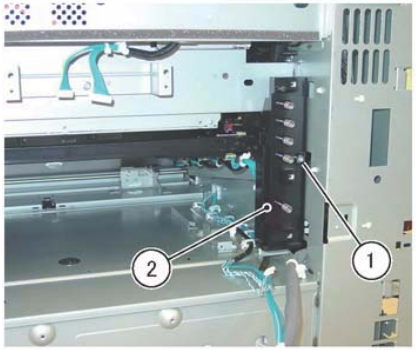

j0rk40504

Figure 3 High Voltage Conductor Housing Assy

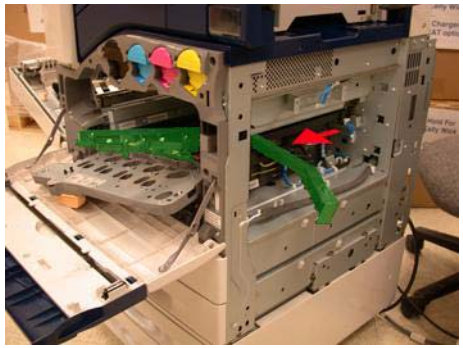

Figure 4 Repositioning the High Voltage Conductor Housing Assy

6. Remove the appropriate Erase Lamp (Y, M, C, K) (Figure 5).
   (1) Remove the screw (1).
   (2) Pull down on the Erase Lamp to disconnect the connector.

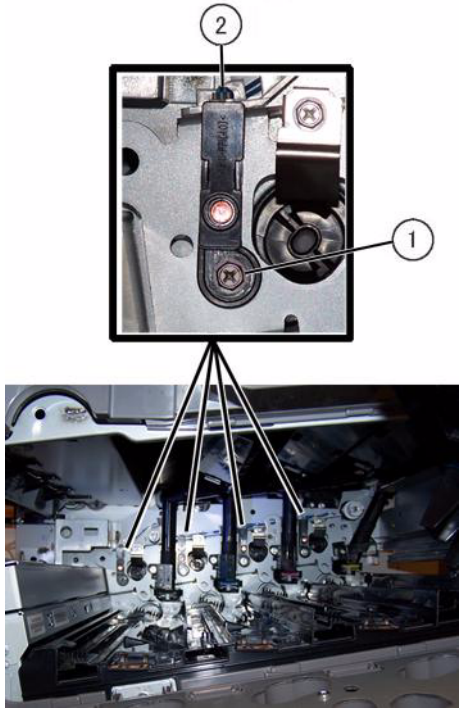

Figure 5 Erase Lamps

Replacement

1. To install, carry out the removal steps in reverse order.

NOTE: *When installing the High Voltage Conductor Housing Assembly, make sure that the tab at the left is inserted properly into the hole of the Frame (Figure 6).*

Figure 6 High Voltage Conductor Housing Assembly Tab

REP 10.1 Fuser Assembly

Parts List on PL 7.1

Removal

WARNING

Do not handle the fuser components until they have cooled. Some fuser components operate at hot temperatures and can produce serious personal injury if touched.

DANGER: Ne pas manipuler les éléments du four avant de les laisser refroidir. Certains éléments du four fonctionnent à des températures très élevées et peuvent causer de graves blessures s'ils sont touchés.

AVVERTENZA: Non maneggiare i componenti del fusore finché non sono raffreddati. Alcuni di questi componenti funzionano ad alte temperature e possono provocare gravi ferite se vengono toccati.

VORSICHT: Die Fixieranlage sollte erst gehandhabt werden, wenn diese genügend abgekühlt ist. Einige Teile der Fixieranlage erzeugen übermäßige Hitze und führen bei der Berührung zu schweren Verbrennungen.

AVISO: No manipule los componentes del fusor antes de que se enfríen. Algunos de los componentes del fusor funcionan a altas temperaturas y pueden ocasionar daños personales graves si se los toca.

1. Switch off the power and disconnect the power cord.
2. Open the L/H Cover Unit.
3. Remove the Fuser Assembly. (Figure 1)
   (1) Loosen the Knob Screws (x2).
   (2) Remove the Fuser Assembly.

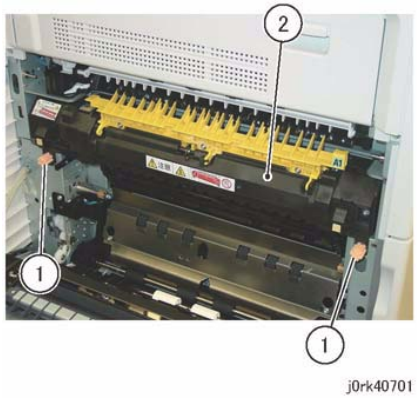

Figure 1 Fuser Assy Removal

Replacement

1. To install, carry out the removal steps in reverse order.
2. Go to dC135 and reset the Counter.

REP 11.1 Exit/OCT 1 Assembly

Parts List on PL 17.1

Removal

1. Switch off the power and disconnect the power cord.
2. Remove the Exit 2 Assembly. (REP 11.2)
3. Remove the Motor Cover. (Figure 1)
   (1) Release the wire harness from the hook.
   (2) Disconnect the connector.
   (3) Remove the self-tapping screw.
   (4) Remove the Motor Cover.

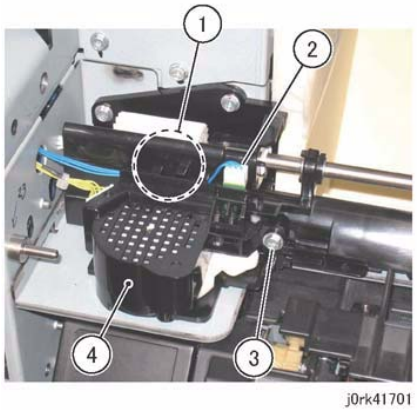

Figure 1 Motor Cover Removal

4. Disconnect the connector. (Figure 2)
   (1) Disconnect the connector.
   (2) Slide and remove the belt.
   (3) Remove the screws (x2).

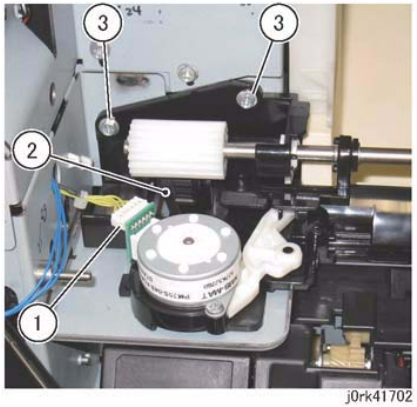

Figure 2 Connector/Belt Removal

5. Remove the Exit/OCT 1 Assembly. (Figure 3)
   (1) Slide the Bearing.
   (2) Remove the Exit/OCT 1 Assembly.

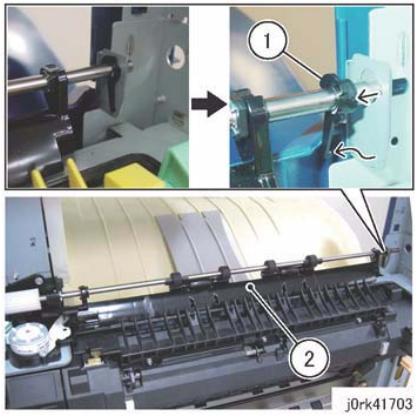

Figure 3 Exit/OCT 1 Assy Removal

Replacement

1. To install, carry out the removal steps in reverse order.

REP 11.2 Exit 2 Assembly

Parts List on PL 17.1

Removal

1. Switch off the power and disconnect the power cord.
2. Open the L/H Cover Unit.
3. Remove the following parts:
   - Front Left Cover (PL 19.2)
   - Left Upper Cover (PL 19.2)
   - Left Rear Upper Cover (PL 19.2)
4. Remove the Paper Weight. (Figure 1)
   (1) Release the hook and remove the Paper Weight.

Figure 1 Paper Weight Removal

5. Remove the Exit 2 Assembly. (Figure 2)
   (1) Disconnect the connectors (x2).
   (2) Remove the screws (x4).
   (3) Remove the Exit 2 Assembly.

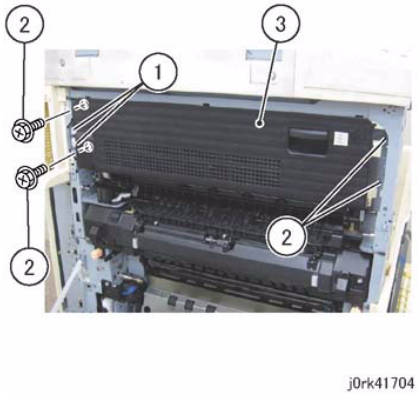

Figure 2 Exit 2 Assy Removal

Replacement

1. To install, carry out the removal steps in reverse order.

REP 12.1 Integrated Office Finisher

Parts List on PL 22.1

Removal

1. Switch off the power and disconnect the power cord.
2. Disconnect the Integrated Office Finisher Wire Harness:

   (1)Remove the Cover.(Figure 1)

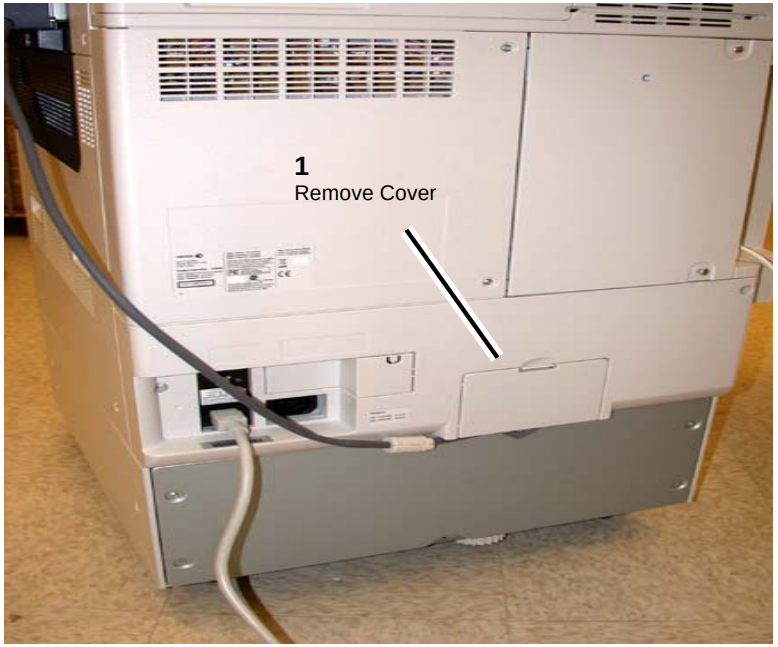

Figure 1 Remove Cover

   (2)Remove Clamp. (Figure 2)

   (3)Disconnect Connectors (2). (Figure 2)

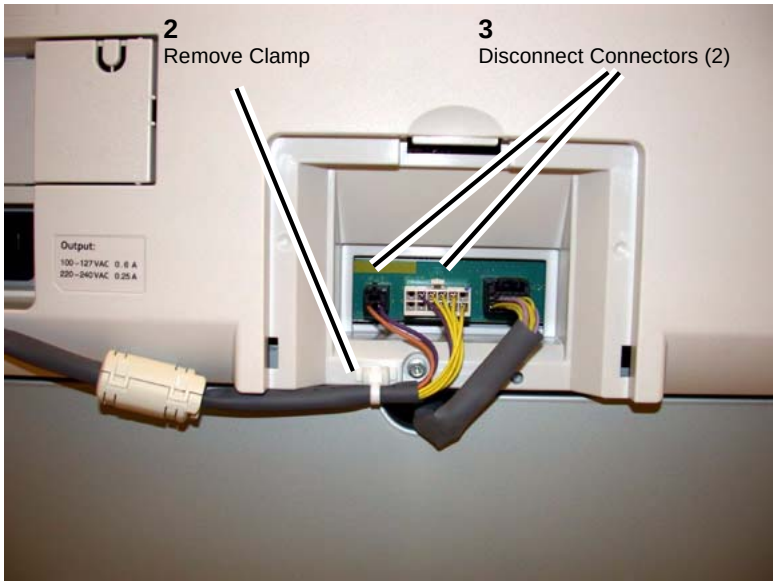

Figure 2 Disconnect Connectors

3. Loosen the Thumb Screws (2) (Figure 3):

Figure 3 Loosen the Thumb Screws

4. Remove the Integrated Office Finisher.

Replacement

1. Reverse the removal procedure for replacement.

REP 12.2 Paddle Belt

Parts List on PL 22.3

Removal

1. Switch off the power and disconnect the power cord
2. Remove the Integrated Office Finisher from the machine (REP 12.1).
3. Remove the Compiler Assembly (REP 12.20)
4. Remove the front Pulley (Figure 1):
   (1)Remove E-Clip.
   (2)Remove Flange.
   (3)Remove Belt from Pulley.
   (4)Remove Pulley.

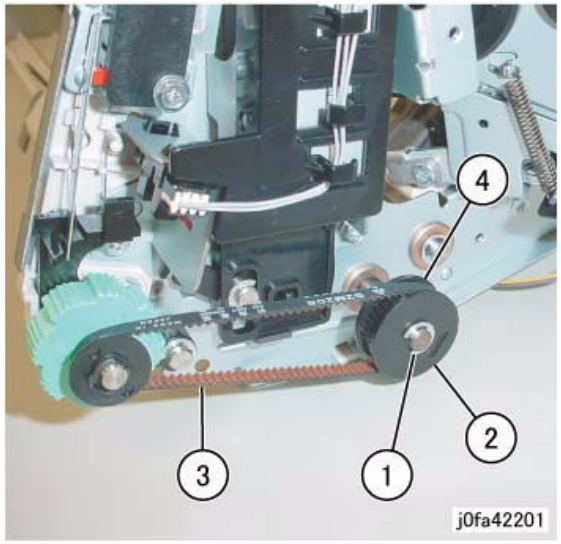

Figure 1 Removing the Pulley

5. Remove the Front Bearing (Figure 2):
   (1)Remove Bearing.

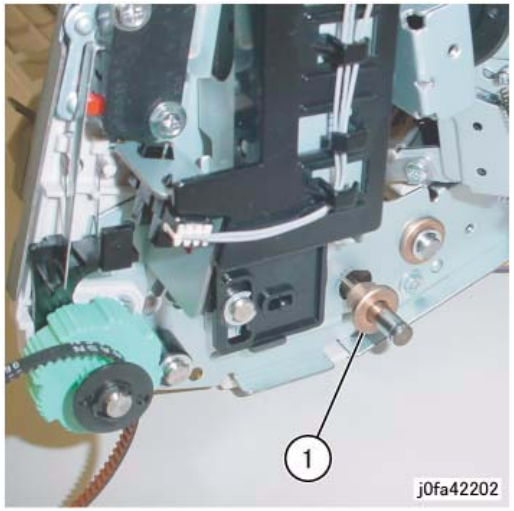

Figure 2 Removing the Front Bearing

6. Remove the Rear Gear (Figure 3)
   (1)Remove E-Clip.
   (2)Remove Gear.

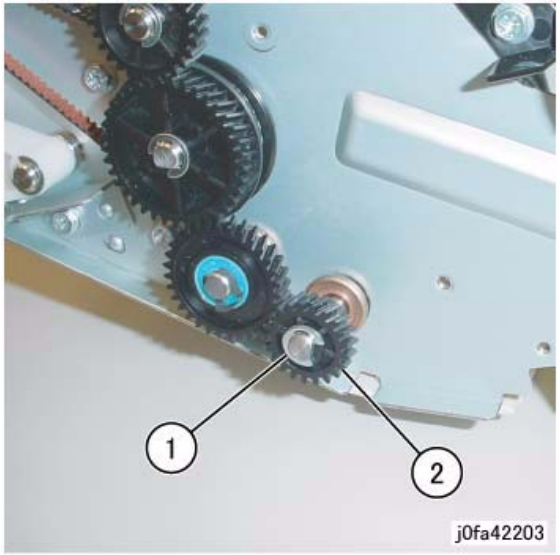

Figure 3 Removing the Gear

7. Remove the Rear Bearing (Figure 4):
   (1)Remove Bearing.

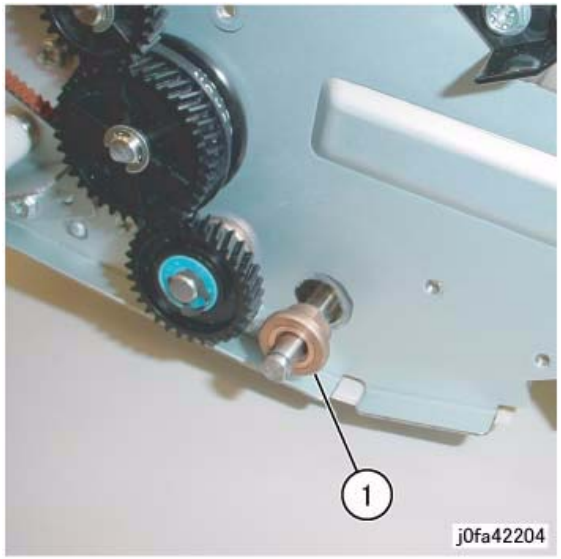

Figure 4 Removing the Bearing

8. Remove the Paddle Link Assembly (Figure 5):
   (1)Remove Paddle Link Assembly.

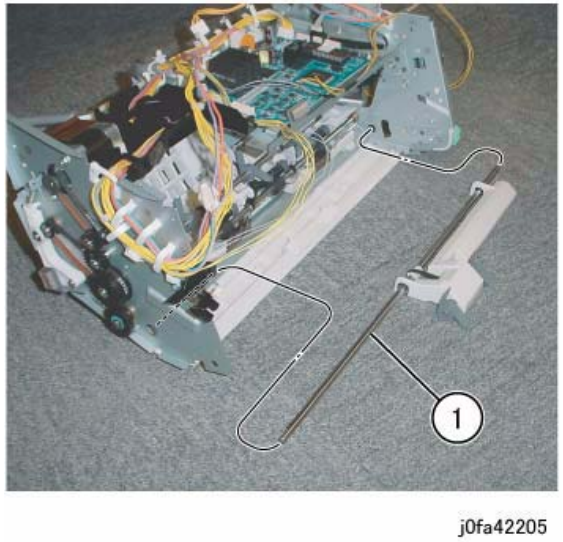

Figure 5 Removing the Paddle Link Assembly

9. Remove the Bearing (Figure 6):
   (1)Remove E-Clip.
   (2)Remove Bearing.

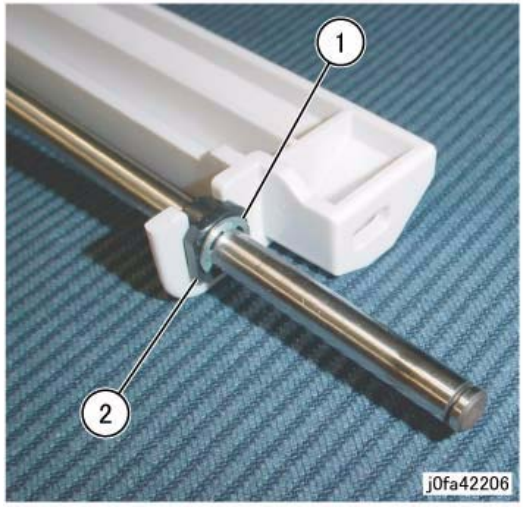

Figure 6 Removing Bearing

10. Remove the Shaft Assembly (Figure 7):
    (1)Remove Paddle Belt from Pulley.
    (2)Remove Shaft Assembly in the direction of the arrow.

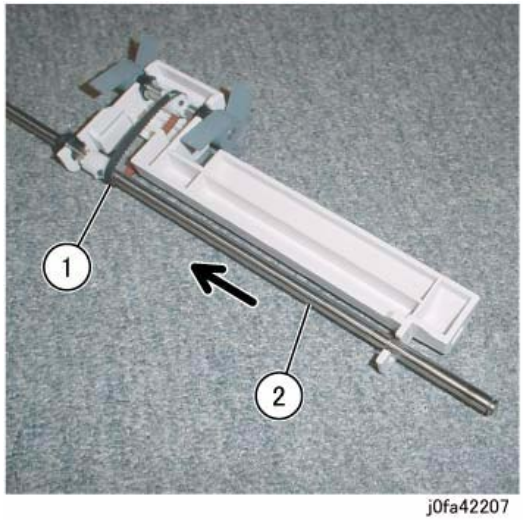

Figure 7 Removing Shaft Assembly

11. Remove the Paddle Belt (Figure 8):
    (1)Remove E-Clips (2).
    (2)Move Bearings (2) in the direction of the arrow.
    (3)Remove Sub Paddle Shaft Assembly.
    (4)Remove Paddle Belt.

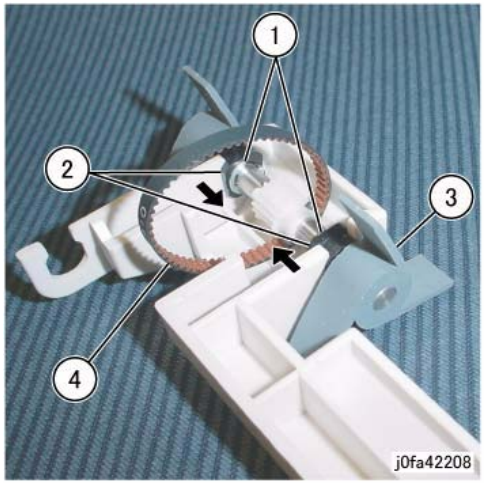

Figure 8 Removing the Paddle Belt

Replacement

1. Reverse the removal procedure for replacement.
2. Install the Paddle Link Assembly as shown in Figure 9.

Figure 9 Installing the Paddle Link Assembly

REP 12.3 Sub Paddle Solenoid

Parts List on PL 22.3

Removal

1. Switch off the power and disconnect the power cord.
2. Remove the Integrated Office Finisher from the machine (REP 12.1).
3. Remove the Inner Front Cover (PL 22.1)
4. Turn over the Integrated Office Finisher.
5. Remove the Bottom Cover (PL 22.2)
6. Disconnect the Connector (Figure 1):
   (1)Release Clamps (3) and remove the wire.
   (2)Disconnect Connector.

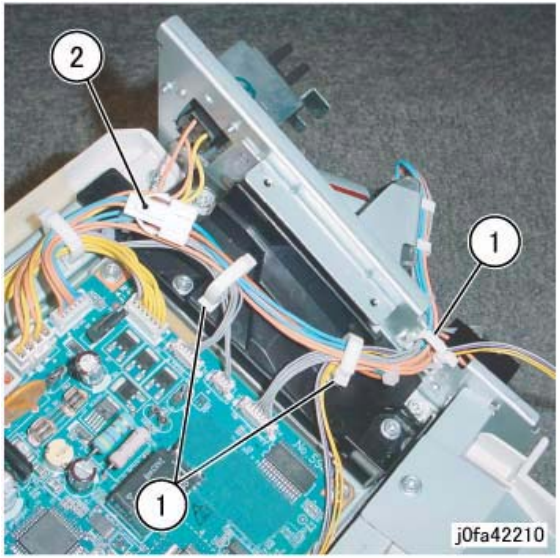

Figure 1 Disconnecting the Connector

7. Turn over the Integrated Office Finisher.
8. Remove the Sub Paddle Solenoid Assembly (Figure 2):
   (1)Disconnect Connector.
   (2)Release Wire from Hook.
   (3)Remove Screws (2).
   (4)Remove Sub Paddle Solenoid Assembly.

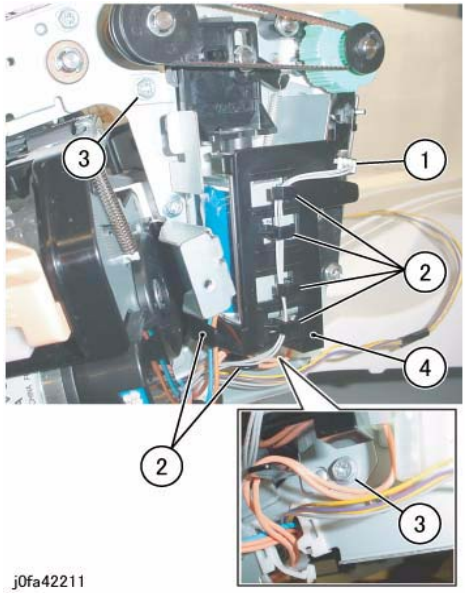

Figure 2 Removing the Sub Paddle Solenoid Assembly

9. Remove the Support (Figure 3):
   (1)Remove Screw.
   (2)Remove Support.

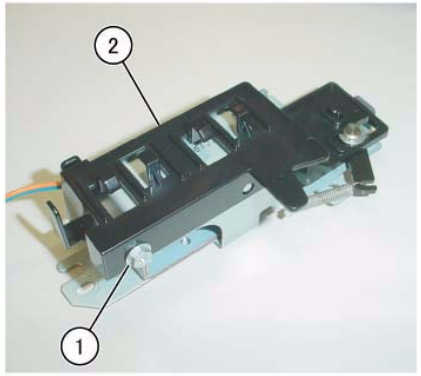

Figure 3 Removing the Support

10. Remove the Sub Paddle Solenoid (Figure 4):
    (1)Remove Screws (2).
    (2)Remove the Sub Paddle Solenoid.

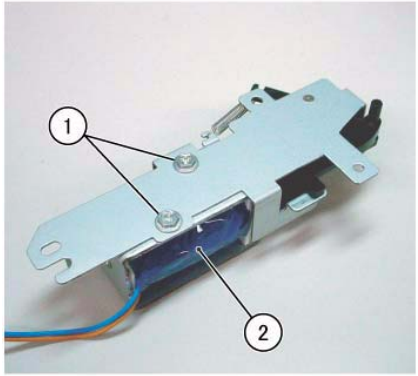

j0fa42213

Figure 4 Removing the Sub Paddle Solenoid

Replacement

1. Reverse the removal procedure for replacement.
2. Install the Sub Paddle Assembly as shown in Figure 5.

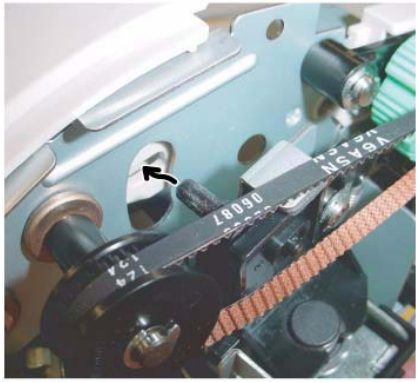

j0fa42214

Figure 5 Installing the Sub Paddle Assembly

REP 12.5 Staple Assembly

Parts List on PL 22.4

Removal

1. Switch off the power and disconnect the power cord.
2. Remove the Integrated Office Finisher from the machine (REP 12.1).
3. Remove the Inner Front Cover (PL 22.1)
4. Remove the Staple Assembly (Figure 1):
   (1)Remove Clamps (2).
   (2)Disconnect Connectors (2).
   (3)Remove Screws (2).
   (4)Remove Staple Assembly.

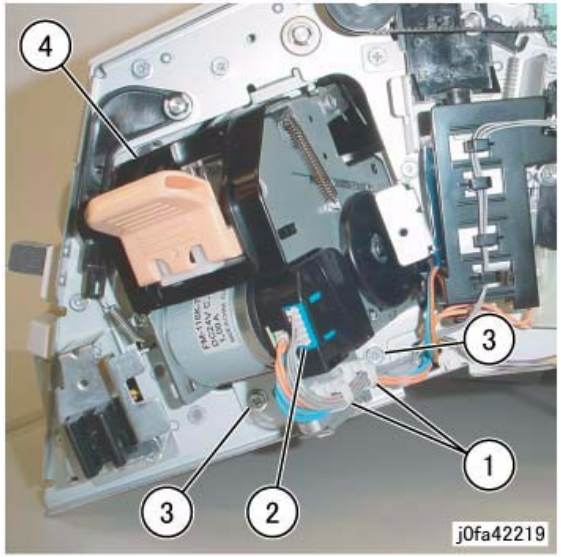

Figure 1 Removing the Staple Assembly

5. Remove the Bracket from the Staple Assembly (Figure 2):
   (1)Remove Screws (2).
   (2)Remove Bracket.

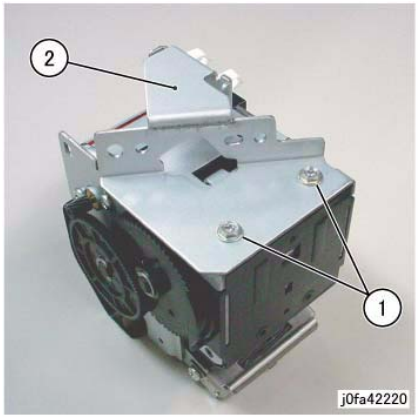

Figure 2 Removing the Bracket

Replacement

1. Reverse the removal procedure for replacement.

REP 12.6 Set Clamp Home Sensor

Parts List on PL 22.4

Removal

1. Switch off the power and disconnect the power cord.
2. Remove the Integrated Office Finisher from the machine (REP 12.1).
3. Remove the Rear Cover (PL 22.1)
4. Disconnect the Connector (Figure 1):
   (1)Release Clamp and remove the wire.
   (2)Disconnect Connector.

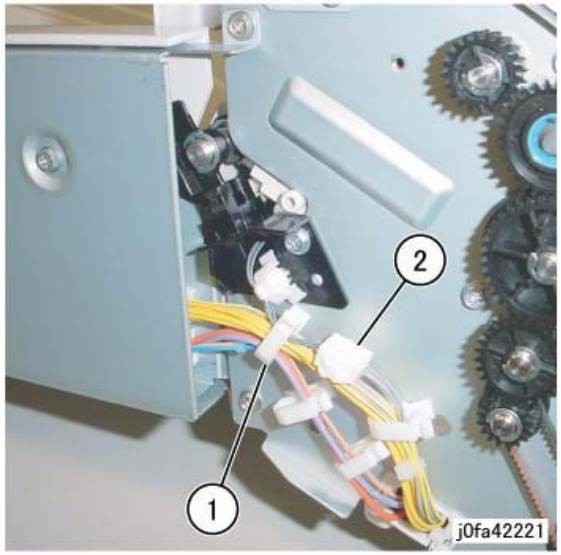

Figure 1 Disconnecting Connector

5. Remove the Set Clamp Home Sensor Assembly (Figure 2):
   (1)Remove Screw.
   (2)Remove Set Clamp Home Sensor Assembly.

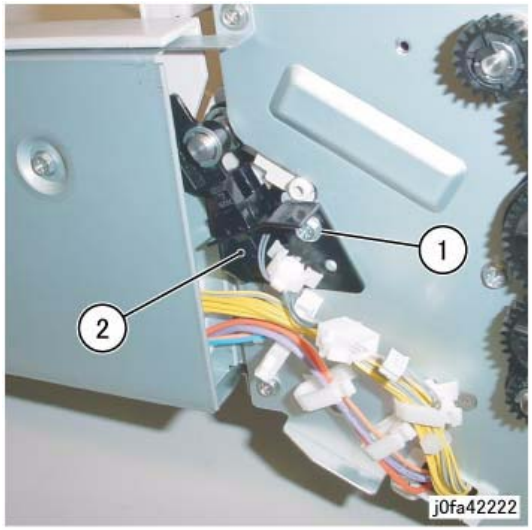

Figure 2 Removing the Set Clamp Home Sensor Assembly

6. Remove the Set Clamp Home Sensor (Figure 3):
   (1)Remove Set Clamp Home Sensor from Bracket.
   (2)Disconnect Connector.

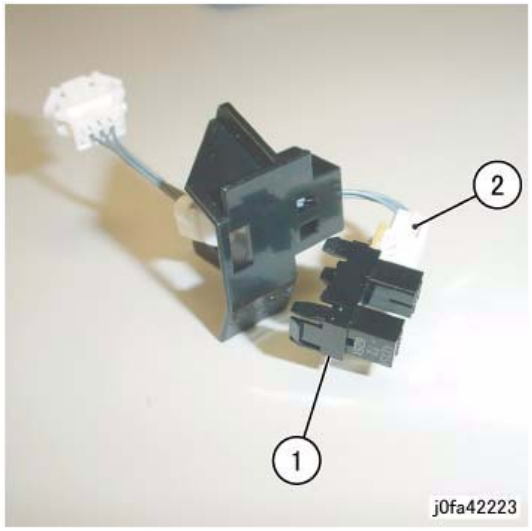

Figure 3 Removing the Set Clamp Home Sensor

Replacement

1. Reverse the removal procedure for replacement.

REP 12.7 Exit Roll Assembly

Parts List on PL 22.4

Removal

NOTE: *The Integrated Office Finisher is available for use in several different machines. The color of the Covers may be different from product to product, however, the repair procedures are the same.*

1. Switch off the power and disconnect the power cord.
2. Remove the Integrated Office Finisher from the machine (REP 12.1).
3. Remove the Inner Front Cover (PL 22.1)
4. Remove the Rear Cover (PL 22.1)
5. Remove the Left Cover (PL 22.2)
6. Remove the Upper Frame Section (Figure 1):
   (1)Remove Screw and Bracket.
   (2)Remove Screws (2).
   (3)Remove Screw and Bracket.
   (4)Remove Screws (2).
   (5)Remove the Upper Frame Section

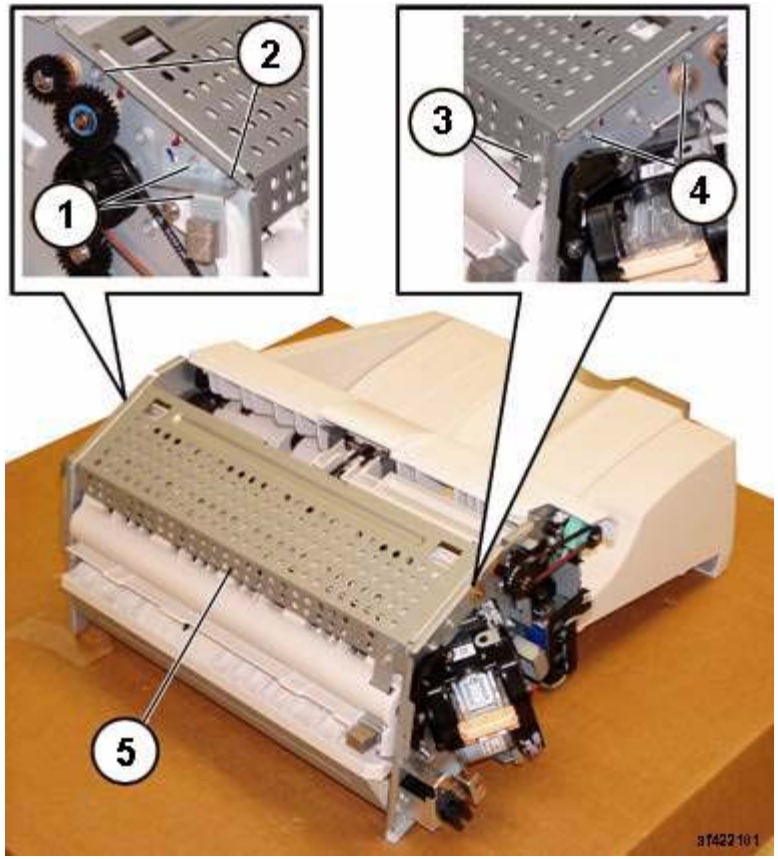

Figure 1 Removing the Upper Frame Section

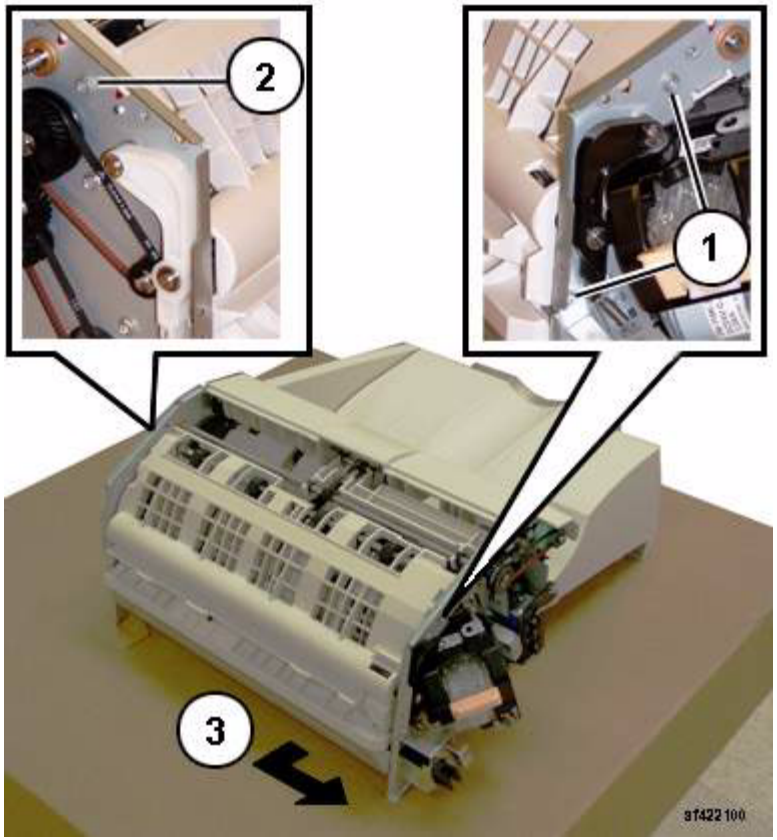

Figure 2 Removing the Upper Chute Assembly

NOTE: *The screws do not thread into the Upper Chute. They are used like pins to secure the Upper Chute in place.*

7. Remove the Upper Chute Assembly (Figure 2):
   (1)Remove Screws (2).
   (2)Remove Screw.
   (3)Carefully Remove the Upper Chute Assembly.

8. Remove the Exit Roll Assembly (Figure 3):
   (1)Remove E-ring and Bearing.
   (2)Remove E-ring and Bearing.
   (3)Remove the Exit Roll Assembly.

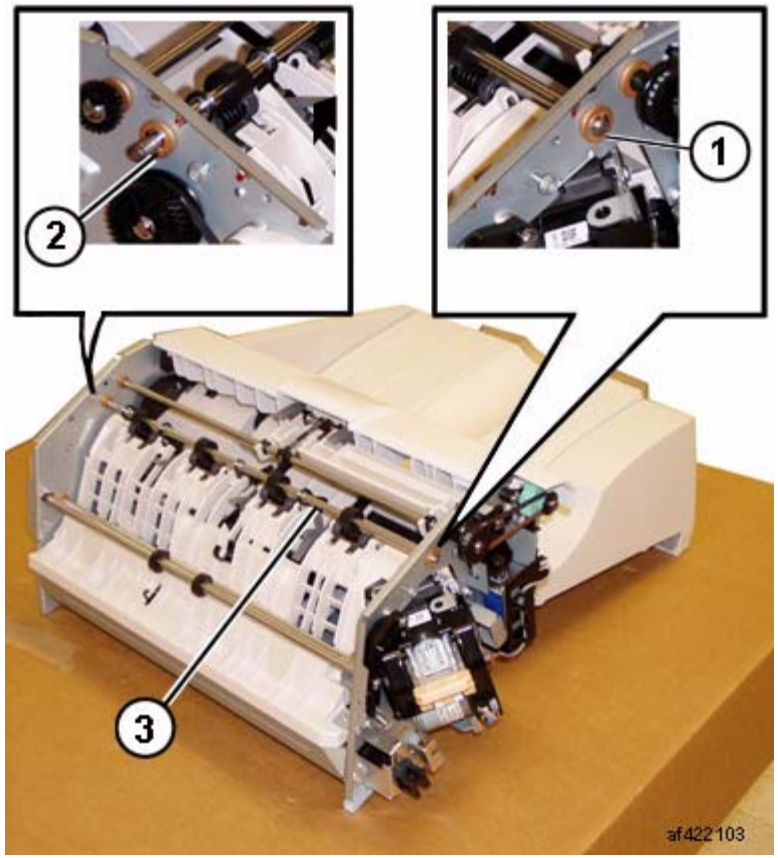

Figure 3 Removing the Exit Roll Assembly

Replacement

1. Reverse the removal procedure for replacement.

   NOTE: *Ensure that the Paper Guides on the Upper Chute (PL 22.6) are not folded back on top of the Exit Roll Assembly.*

REP 12.8 Pinch Roll

Parts List on PL 22.5

Removal

1. Switch off the power and disconnect the power cord.
2. Remove the Integrated Office Finisher from the machine (REP 12.1).
3. Remove the Compiler Assembly (REP 12.20)
4. Remove the Pinch Roll (Figure 1):
   (1)Raise Springs (4) in the direction of the arrow.
   (2)Remove Pinch Rolls (4).

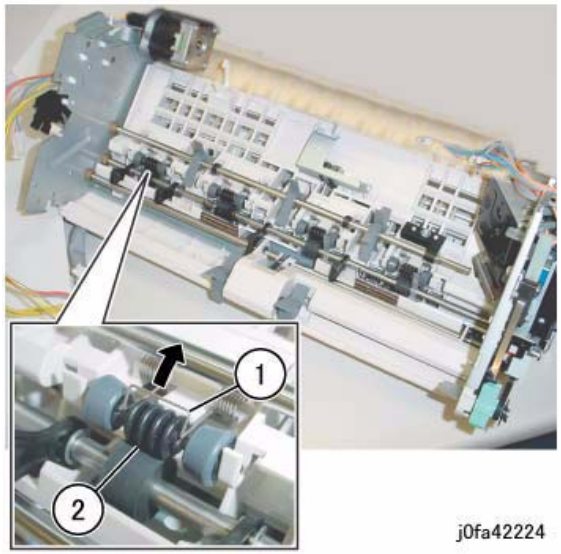

Figure 1 Removing the Pinch Rolls

Replacement

1. Reverse the removal procedure for replacement.

REP 12.9 Finisher Entrance Sensor

Parts List on PL 22.5

Removal

1. Switch off the power and disconnect the power cord.
2. Remove the Integrated Office Finisher from the machine (REP 12.1).
3. Turn over the Integrated Office Finisher.
4. Remove the Bottom Cover (PL 22.2)
5. Remove the Connector Bracket (Figure 1):
   (1)Release Clamps (3) and remove the wire.
   (2)Disconnect Connectors (5).
   (3)Remove Screws (2).
   (4)Remove Connector Bracket.

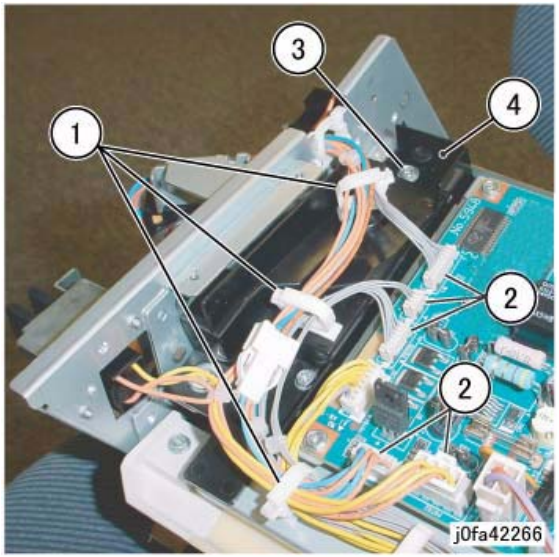

Figure 1 Removing the Connector Bracket

6. Remove the Bottom Plate (Figure 2):
   (1)Release Clamps (5) and remove the wire.
   (2)Disconnect Connectors (8).
   (3)Remove Wire from Hook.
   (4)Remove Screws (4).
   (5)Remove Bottom Plate.

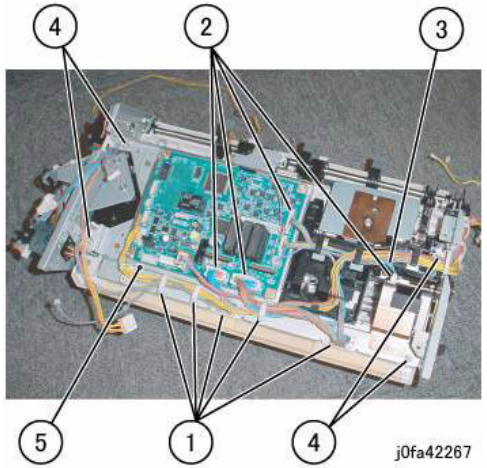

Figure 2 Removing the Bottom Plate

7. Remove the Finisher Entrance Sensor Assembly (Figure 3):
   (1)Disconnect Connector.
   (2)Remove Self-tapping Screw.
   (3)Remove Finisher Entrance Sensor Assembly.

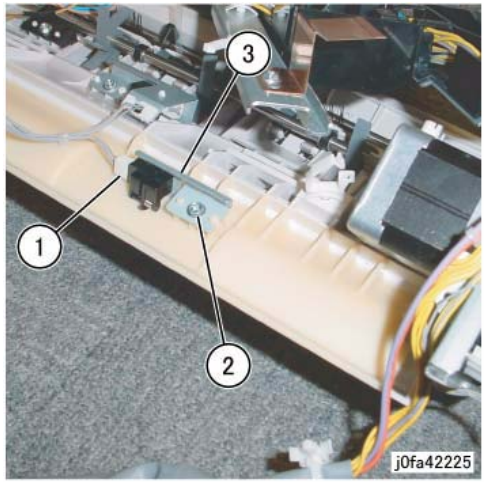

Figure 3 Removing the Finisher Entrance Sensor Assembly

8. Remove the Finisher Entrance Sensor (Figure 4):
   (1)Remove Finisher Entrance Sensor from Bracket.

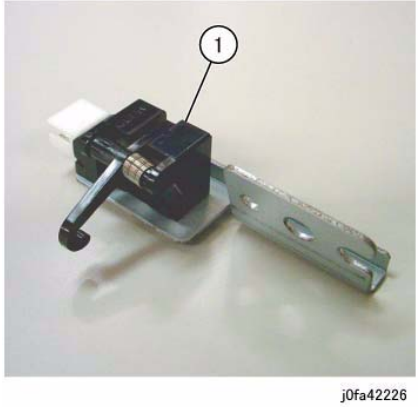

Figure 4 Removing the Finisher Entrance Sensor

Replacement

1. Reverse the removal procedure for replacement.

REP 12.10 Compiler Exit Sensor

Parts List on PL 22.5

Removal

1. Switch off the power and disconnect the power cord.
2. Remove the Integrated Office Finisher from the machine (REP 12.1).
3. Turn over the Integrated Office Finisher.
4. Remove the Bottom Cover (PL 22.2)
5. Remove the Connector Bracket (Figure 1):
   (1)Release Clamps (3) and remove the wire.
   (2)Disconnect Connectors (5).
   (3)Remove Screws (2).
   (4)Remove Connector Bracket.

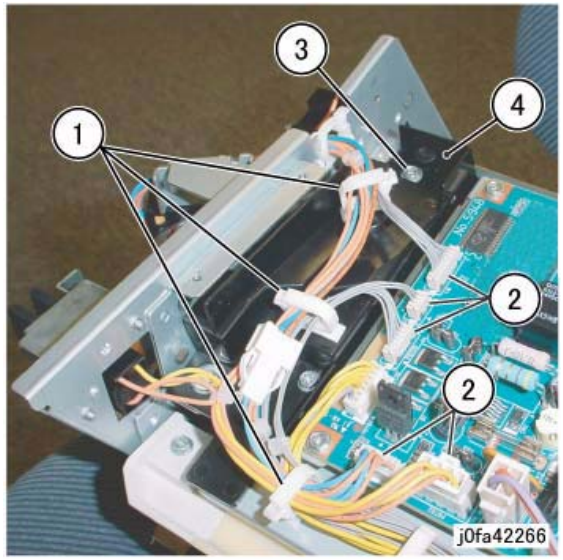

Figure 1 Removing the Connector Bracket

6. Remove the Bottom Plate (Figure 2):
   (1)Release Clamps (5) and remove the wire.
   (2)Disconnect Connectors (8).
   (3)Release Wire from Hook.
   (4)Remove Screws (4).
   (5)Remove Bottom Plate.

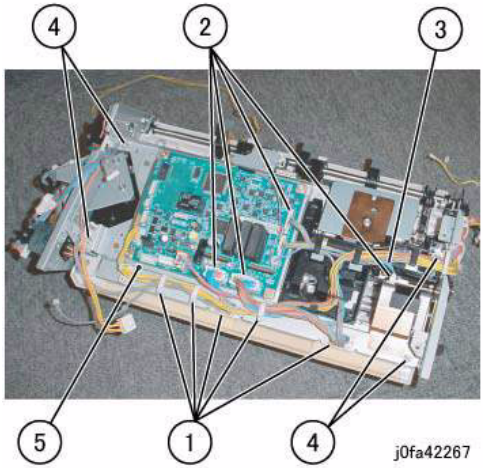

Figure 2 Removing the Bottom Plate

7. Remove the Compiler Exit Sensor Assembly (Figure 3):
   (1)Remove Screw.
   (2)Remove Compiler Exit Sensor Assembly.

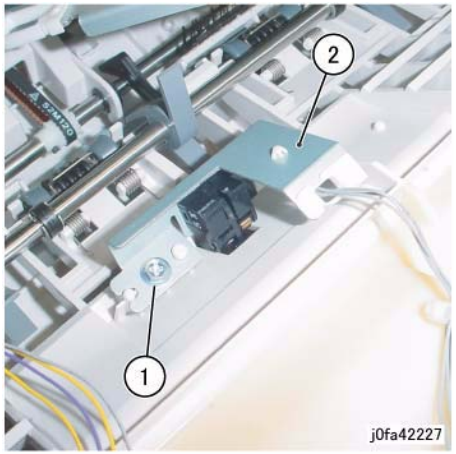

Figure 3 Removing the Compiler Exit Sensor Assembly

8. Remove the Compiler Exit Sensor (Figure 4):
   (1)Release Clamps (2) and remove the wire.
   (2)Disconnect Connector.
   (3)Remove Compiler Exit Sensor.

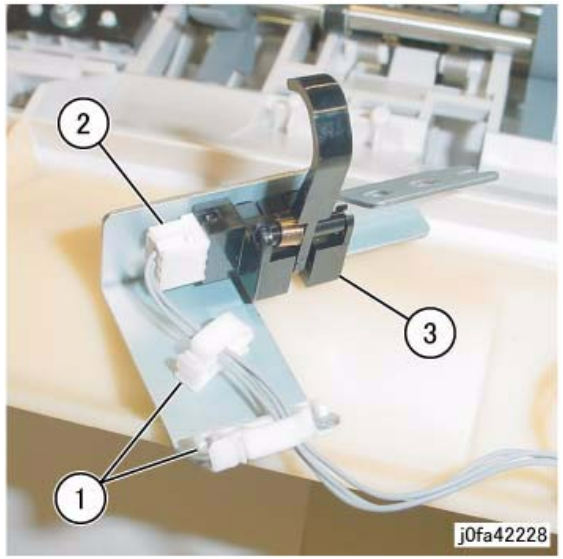

Figure 4 Removing the Compiler Exit Sensor

Replacement

1. Reverse the removal procedure for replacement.

REP 12.11 Main Paddle Shaft Assembly

Parts List on PL 22.5

Removal

1. Switch off the power and disconnect the power cord.
2. Remove the Integrated Office Finisher from the machine (REP 12.1).
3. Remove the Compiler Assembly (REP 12.20)
4. Remove the Gear (Figure 1):
   (1)Remove E-Clip.
   (2)Remove Gear.
   (3)Remove KL-Clip.
   (4)Remove Gear.

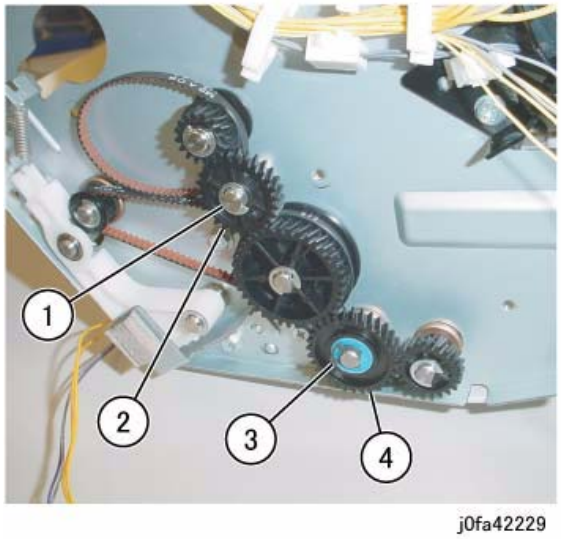

Figure 1 Removing the Gear

5. Remove the Gear Pulley (Figure 2):
   (1)Remove E-Clip.
   (2)Remove Gear.
   (3)Remove Flange.

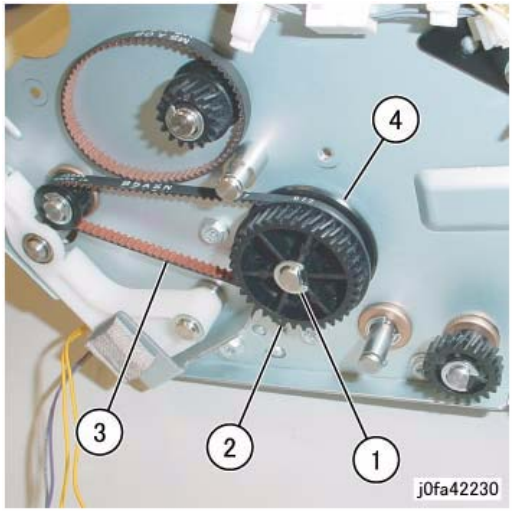

Figure 2 Removing the Gear Pulley

6. Remove the Bearing (Figure 3):
   (1)Remove Bearing.

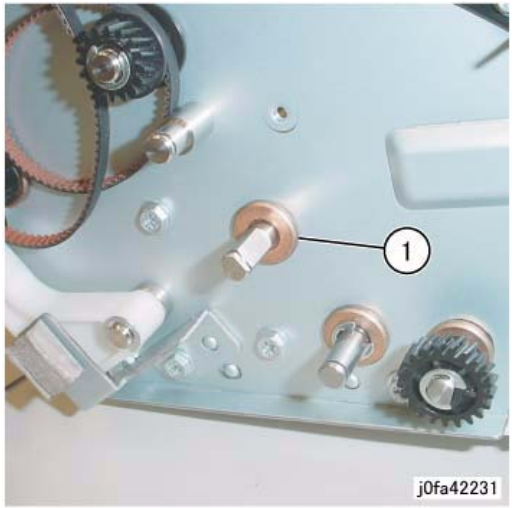

Figure 3 Removing the Bearing

7. Remove the Support Bearing from the Entrance Lower Chute Assembly (Figure 4):
   (1)Remove Self-tapping Screw.
   (2)Remove Support Bearing.

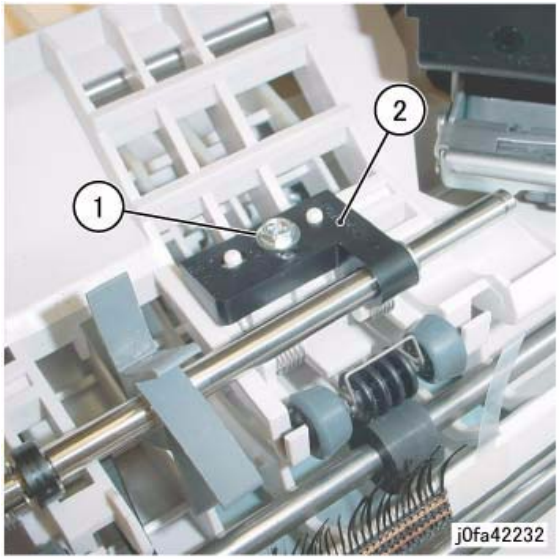

Figure 4 Removing the Support Bearing

8. Remove the Main Paddle Shaft Assembly (Figure 5):
   (1)Remove Main Paddle Shaft Assembly.

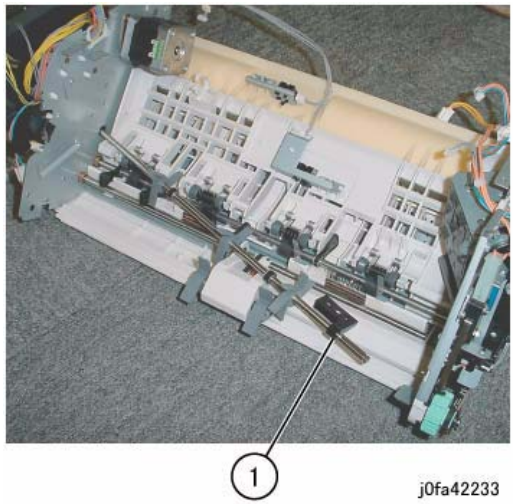

Figure 5 Removing the Main Paddle Shaft Assembly

9. Remove the Support Bearing from the Main Paddle Shaft Assembly (Figure 6):
   (1)Remove E-Clip.
   (2)Remove Support Bearing.

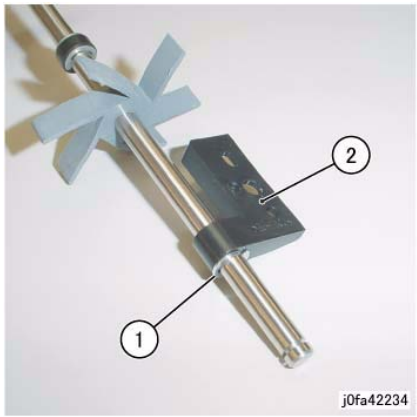

Figure 6 Removing the Support Bearing

Replacement

1. Reverse the removal procedure for replacement.

REP 12.12 Lower Chute Assembly

Parts List on PL 22.5

Removal

1. Switch off the power and disconnect the power cord.
2. Remove the Integrated Office Finisher from the machine (REP 12.1).
3. Remove the Compiler Assembly (REP 12.20)
4. Turn over the Integrated Office Finisher (Transport).
5. Remove the Stapler Assembly (Figure 1):
   (1)Release Clamps (2) and remove the wire.
   (2)Disconnect Connectors (2).
   (3)Remove Screws (2).
   (4)Remove Stapler Assembly.

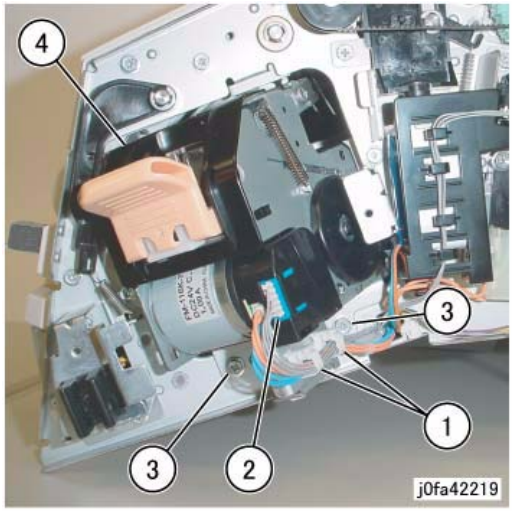

Figure 1 Removing the Stapler Assembly

6. Turn over the Integrated Office Finisher.
7. Remove the Transport Motor (Figure 2):
   (1)Remove Screws (2).
   (2)Remove Belt from Pulley.
   (3)Remove Transport Motor.

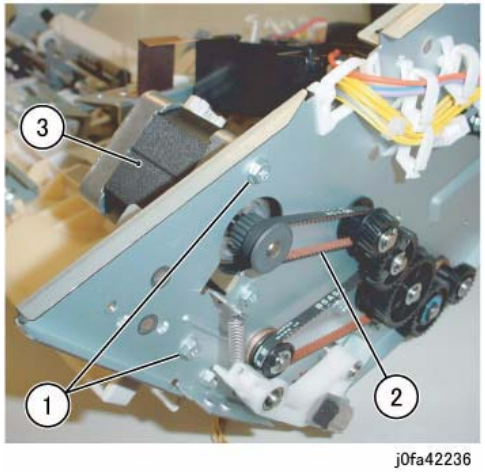

Figure 2 Removing the Transport Motor

8. Remove the Gear (Figure 3):
   (1)Remove E-Clip.
   (2)Remove Gear.
   (3)Remove KL-Clip.
   (4)Remove Gear.

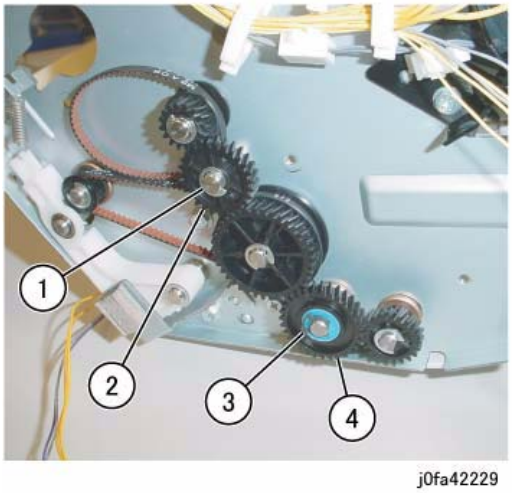

Figure 3 Removing the Gear

9. Remove the Gear Pulley (Figure 4):
   (1)Remove E-Clip.

(2)Remove Gear.
(3)Remove Pulley from Belt.
(4)Remove Flange.

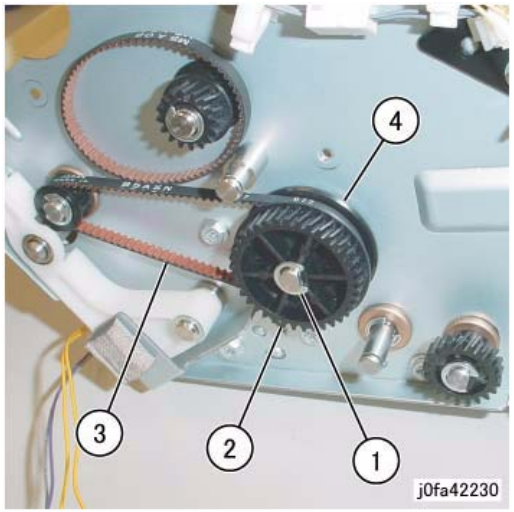

Figure 4 Removing the Gear Pulley

10. Remove the Bearing (Figure 5):
    (1)Remove the Bearing.

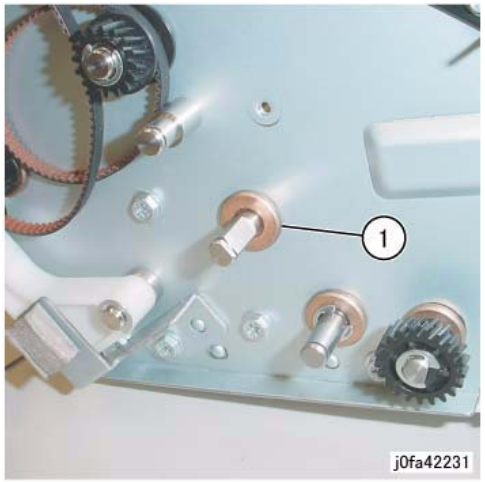

Figure 5 Removing the Bearing

11. Remove the Entrance Lower Chute Assembly (Figure 6):
    (1)Remove Screws (2).
    (2)Loosen Screws (2).
    (3)Remove Entrance Lower Chute Assembly.

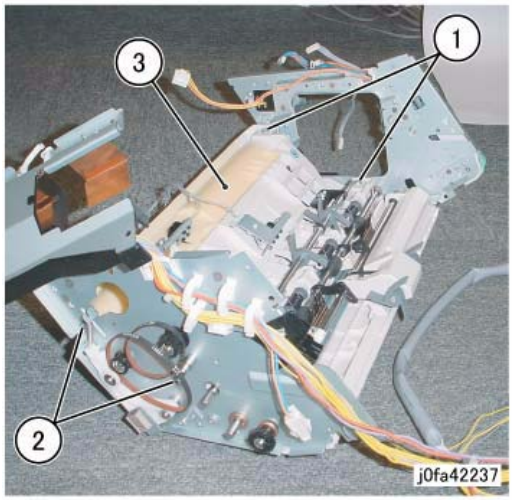

Figure 6 Removing the Entrance Lower Chute Assembly

Replacement

1. Reverse the removal procedure for replacement.

REP 12.13 Entrance Roll Assembly

Parts List on PL 22.6

Removal

NOTE: *The Integrated Office Finisher is available for use in several different machines. The color of the Covers may be different from product to product, however, the repair procedures are the same.*

1. Switch off the power and disconnect the power cord.
2. Remove the Integrated Office Finisher from the machine (REP 12.1).
3. Remove the Inner Front Cover (PL 22.1)
4. Remove the Rear Cover (PL 22.1)
5. Remove the Left Cover (PL 22.2)
6. Remove the Upper Frame Section (Figure 1):
   (1)Remove Screw and Bracket.
   (2)Remove Screws (2).
   (3)Remove Screw and Bracket.
   (4)Remove Screws (2).
   (5)Remove the Upper Frame Section

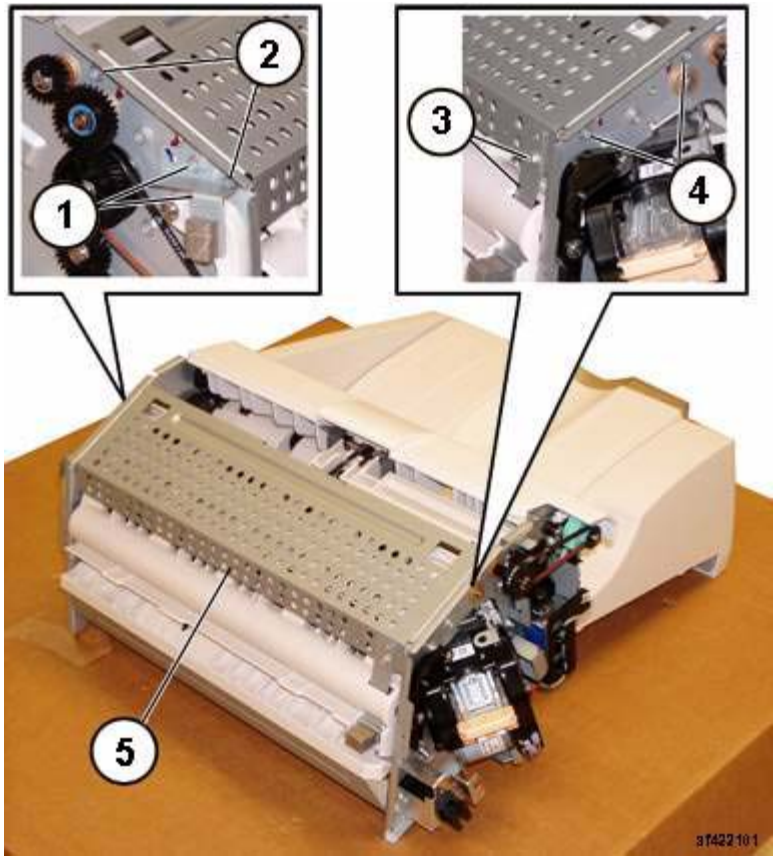

Figure 1 Removing the Upper Frame Section

NOTE: *The screws do not thread into the Upper Chute. They are used like pins to secure the Upper Chute in place.*

7. Remove the Upper Chute Assembly (Figure 2):
   (1)Remove Screws (2).
   (2)Remove Screw.
   (3)Carefully Remove the Upper Chute Assembly.

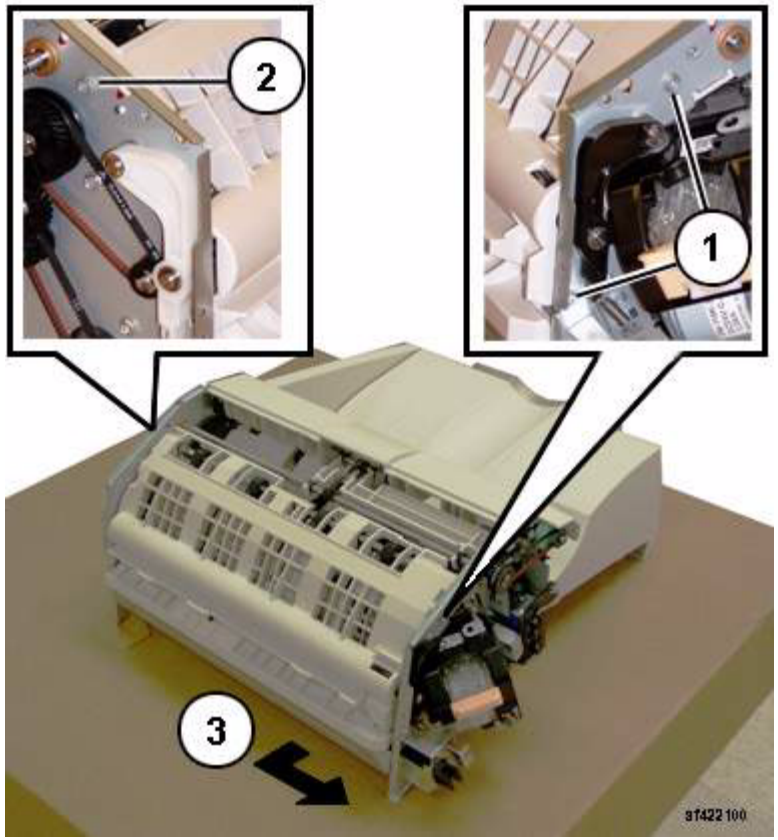

Figure 2 Removing the Upper Chute Assembly

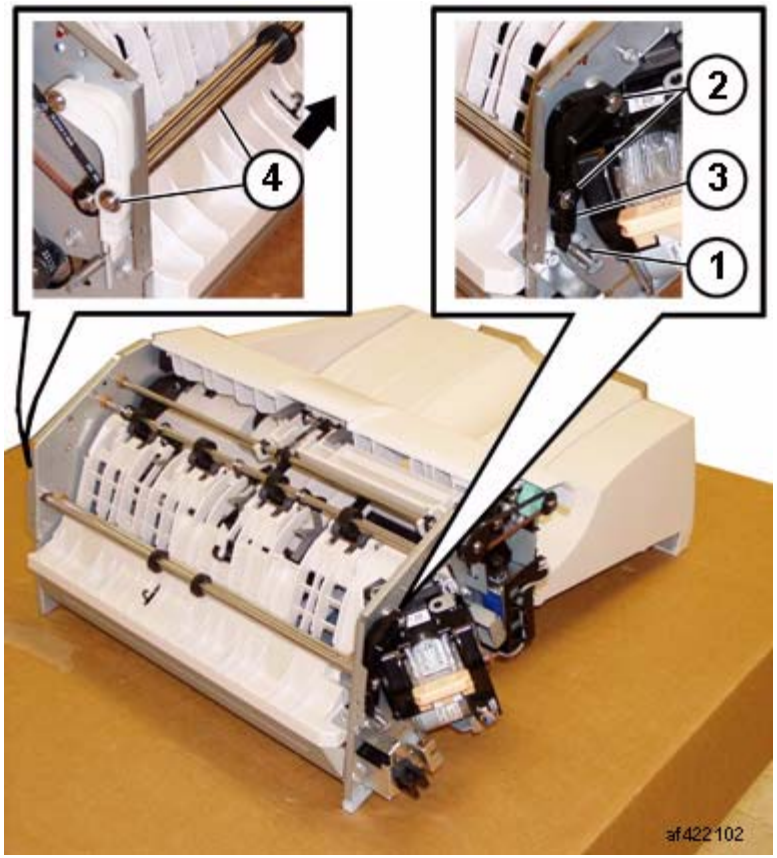

Figure 3 Removing the Gear

8. Remove the Entrance Roll Assembly (Figure 3):
   (1)Disconnect Spring.
   (2)Remove E-Rings (2).

   NOTE: *Capture the Bearing*

   (3)Remove Arm.
   (4)Slide Shaft out of the Bearing in the Arm.

Replacement

1. Reverse the removal procedure for replacement.

   NOTE: *Ensure that the Paper Guides on the Upper Chute (PL 22.6) are not folded back on top of the Exit Roll Assembly.*

REP 12.14 Upper Chute Assembly

Parts List on PL 22.6

Removal

NOTE: *The Integrated Office Finisher is available for use in several different machines. The color of the Covers may be different from product to product, however, the repair procedures are the same.*

1. Switch off the power and disconnect the power cord.
2. Remove the Integrated Office Finisher from the machine (REP 12.1).
3. Remove the Inner Front Cover (PL 22.1)
4. Remove the Rear Cover (PL 22.1)
5. Remove the Left Cover (PL 22.2)
6. Remove the Upper Frame Section (Figure 1):
   (1)Remove Screw and Bracket.
   (2)Remove Screws (2).
   (3)Remove Screw and Bracket.
   (4)Remove Screws (2).
   (5)Remove the Upper Frame Section

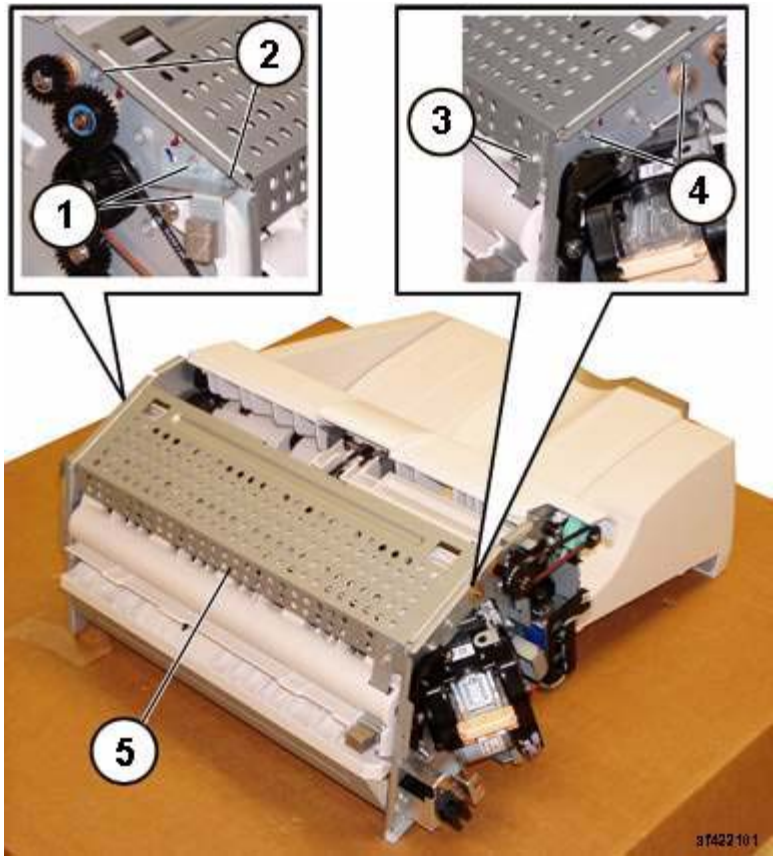

Figure 1 Removing the Upper Frame Section

NOTE: *The screws do not thread into the Upper Chute. They are used like pins to secure the Upper Chute in place.*

7. Remove the Upper Chute Assembly (Figure 2):
   (1)Remove Screws (2).
   (2)Remove Screw.
   (3)Carefully Remove the Upper Chute Assembly.

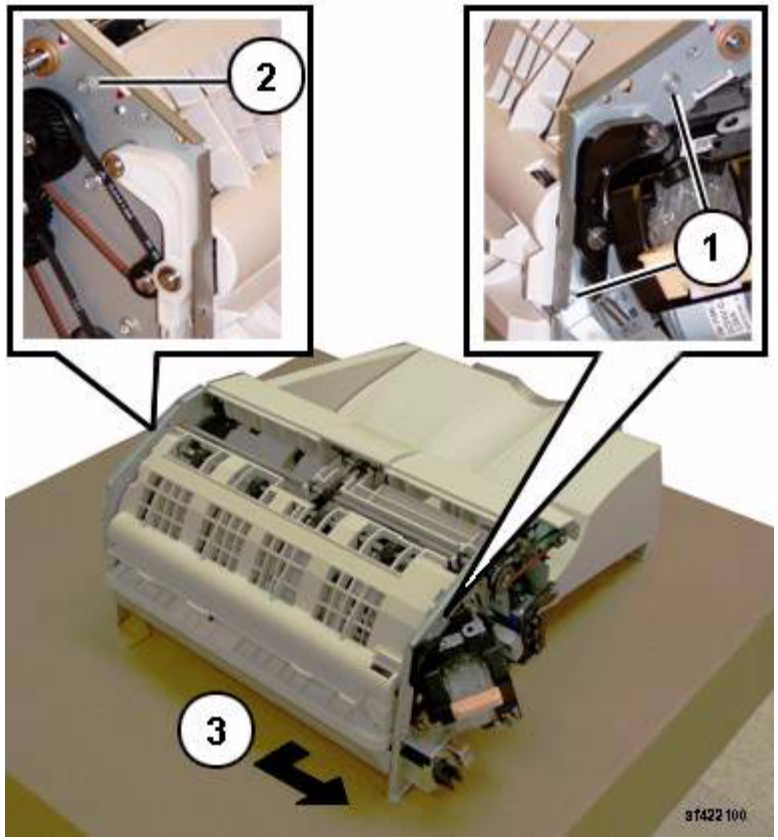

Figure 2 Removing the Upper Chute Assembly

Replacement

1. Reverse the removal procedure for replacement.

   NOTE: *Ensure that the Paper Guides (PL 22.6) are not folded back on top of the Exit Roll Assembly.*

REP 12.15 Finisher PWB

Parts List on PL 22.7

Removal

1. Switch off the power and disconnect the power cord.
2. Remove the Integrated Office Finisher from the machine (REP 12.1).
3. Turn over the Finisher.
4. Remove the Bottom Cover (PL 22.2)
5. Remove the Finisher PWB (Figure 1):
   (1)Disconnect Connectors (12).
   (2)Remove Screws (4).
   (3)Remove Finisher PWB.

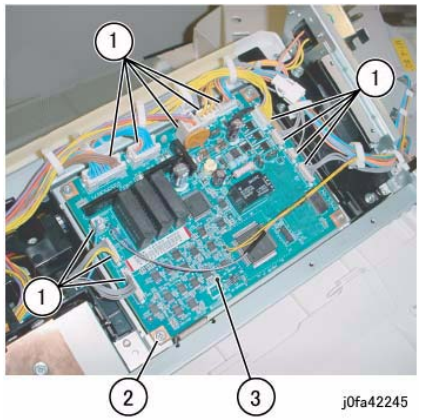

Figure 1 Removing the Finisher PWB

Replacement

1. Reverse the removal procedure for replacement.

REP 12.16 Stacker Tray Assembly

Parts List on PL 22.8

Removal

1. Switch off the power and disconnect the power cord.
2. Remove the Integrated Office Finisher from the machine (REP 12.1).
3. Remove the Inner Front Cover (PL 22.1)
4. Remove the Rear Cover (PL 22.1)
5. Turn over the Integrated Office Finisher.
6. Remove the Bottom Cover (PL 22.2)
7. Remove the Tray Cover (PL 22.2)
8. Disconnect Connector (Figure 1):
   (1)Release Clamp.
   (2)Remove Clamp.
   (3)Release and remove Wire from Hook.
   (4)Release Clamp.
   (5)Disconnect Connector.
   (6)Release and remove Wire from Hook.

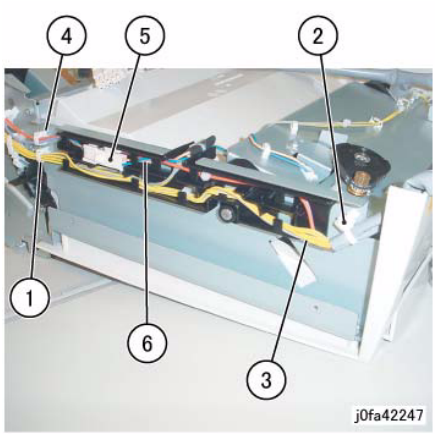

Figure 1 Disconnecting the Connector

9. Release the Clamps and the Hook to remove the wire (Figure 2):
   (1)Release Clamps (5).
   (2)Remove Wire from Hook.

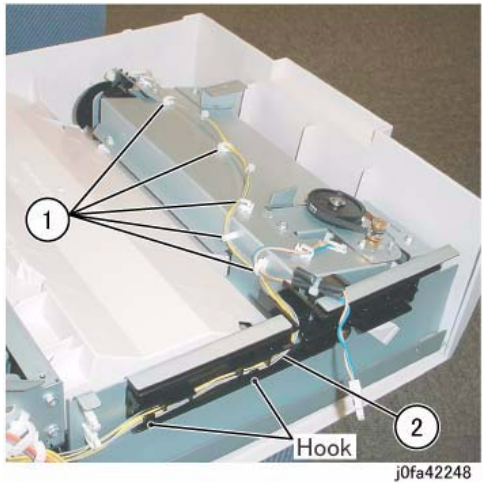

Figure 2 Disconnecting the Wire

10. Remove the Stacker Sensor Assembly (Figure 3):
    (1)Remove Screw.
    (2)Remove Stacker Sensor Assembly.
    (3)Release Clamps (4).
    (4)Disconnect Connectors (2).

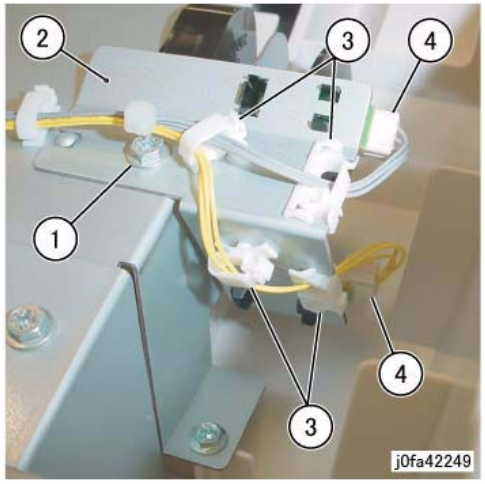

Figure 3 Removing the Stacker Sensor Assembly

11. Remove the Stacker Tray Assembly (Figure 4):
    (1)Remove Screws (5).
    (2)Remove Stacker Tray Assembly.

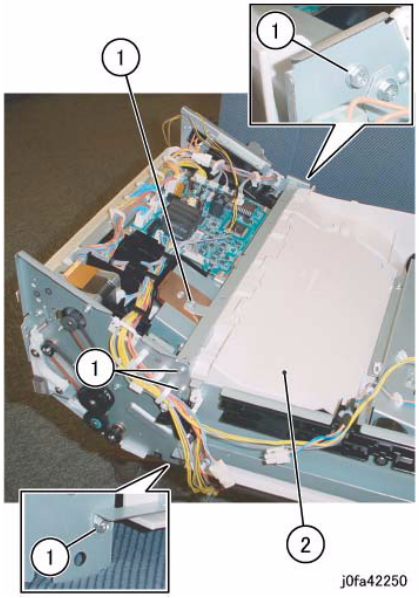

Figure 4 Removing the Stacker Tray Assembly

Replacement

1. Reverse the removal procedure for replacement.
2. Install the Stacker Tray Assembly and Integrated Office Finisher as shown in Figure 5.

Figure 5 Installing the Stacker Tray Assembly

REP 12.17 Stacker Shaft Assembly

Parts List on PL 22.8

Removal

1. Switch off the power and disconnect the power cord.
2. Remove the Integrated Office Finisher from the machine (REP 12.1).
3. Remove the Rear Cover (PL 22.1)
4. Turn over the Integrated Office Finisher.
5. Remove the Tray Cover (PL 22.2)
6. Remove the rear Bracket (Figure 1):
   (1)Remove Screw.
   (2)Remove Bracket.

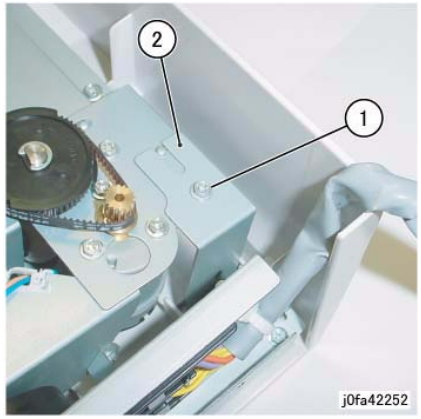

Figure 1 Removing the Rear Bracket

7. Remove the front Bracket (Figure 2):
   (1)Remove Screw.
   (2)Remove Bracket.

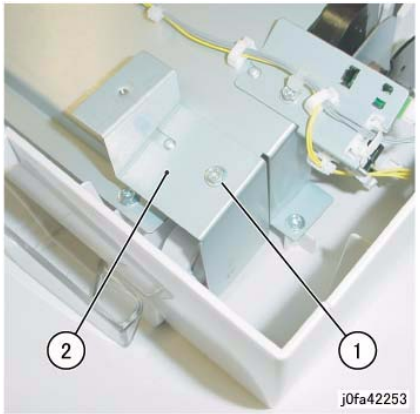

Figure 2 Removing the Front Bracket

8. Remove the Top Tray (Figure 3):
   (1)Raise Integrated Office Finisher slightly in the direction of the arrow.
   (2)Remove Top Tray.

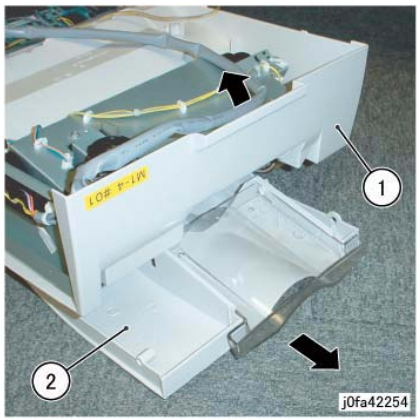

Figure 3 Removing the Top Tray

9. Disconnect Connector (Figure 4):
   (1)Release Clamps (5) and remove the wire.
   (2)Release Wire from Hook.
   (3)Disconnect Connector.

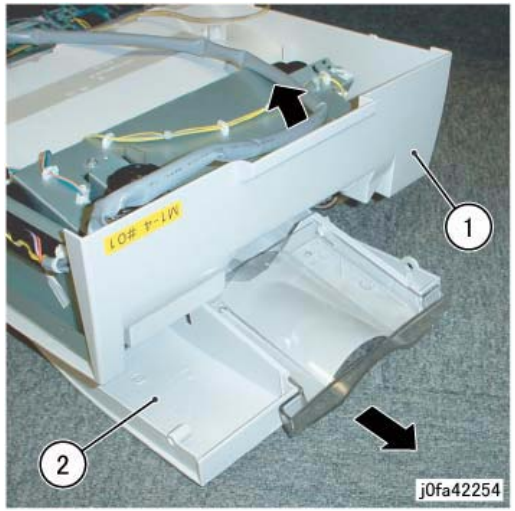

Figure 4 Disconnecting the Connector

10. Remove the Stacker Sensor Assembly (Figure 5):
    (1)Remove Screw.
    (2)Remove Stacker Sensor Assembly.
    (3)Remove Wire from Clamps (5)

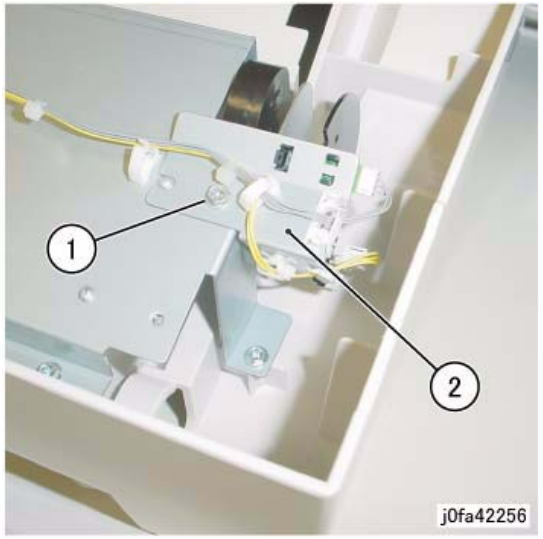

Figure 5 Removing the Stacker Sensor Assembly

11. Remove the Stacker Assembly (Figure 6):

(1)Remove Self-tapping Screws (5).
(2)Remove Screw.
(3)Remove Stacker Assembly.

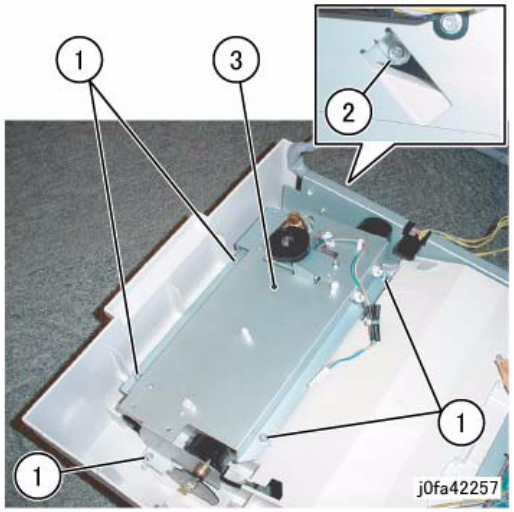

Figure 6 Removing the Stacker Assembly

12. Remove the Actuator (Figure 7):
    (1)Unhook.
    (2)Remove Actuator.

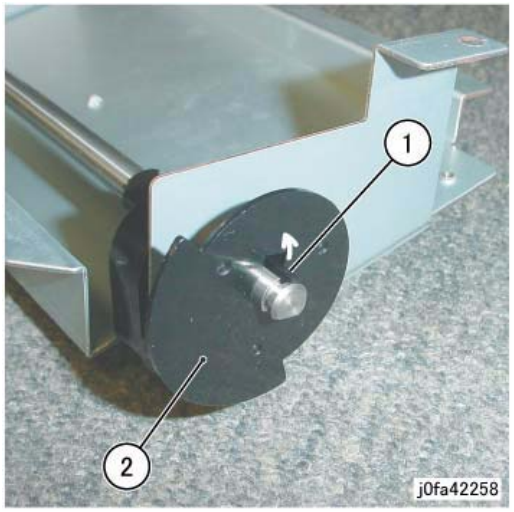

Figure 7 Removing the Actuator

13. Move the Bearing (Figure 8):
    (1)Remove E-Clip.
    (2)Move Bearing in the direction of the arrow.

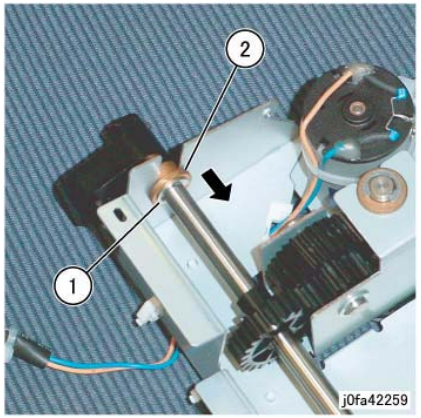

Figure 8 Moving the Bearing

14. Remove the Stacker Shaft Assembly (Figure 9):
    (1)Remove Stacker Shaft Assembly in the direction of the arrow.

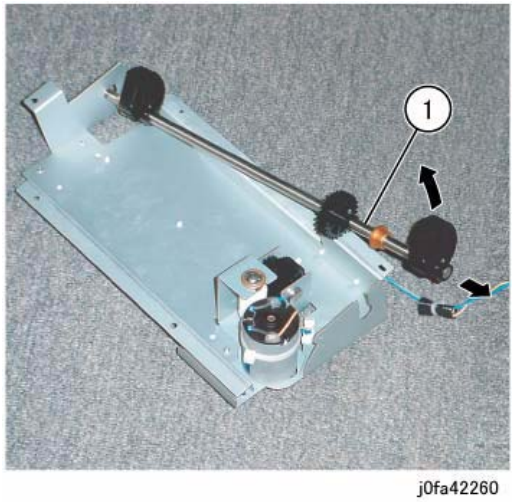

Figure 9 Removing the Stacker Shaft Assembly

Replacement

1. Reverse the removal procedure for replacement.

REP 12.18 Stacker Motor

Parts List on PL 22.8

Removal

1. Switch off the power and disconnect the power cord.
2. Remove the Integrated Office Finisher from the machine (REP 12.1).
3. Remove the Rear Cover (PL 22.1)
4. Turn over the Integrated Office Finisher.
5. Remove the Tray Cover (PL 22.2)
6. Disconnect the Connector (Figure 1):
   (1)Release Clamps (3) and remove the wire.
   (2)Release Wire from Hook.
   (3)Disconnect Connector.

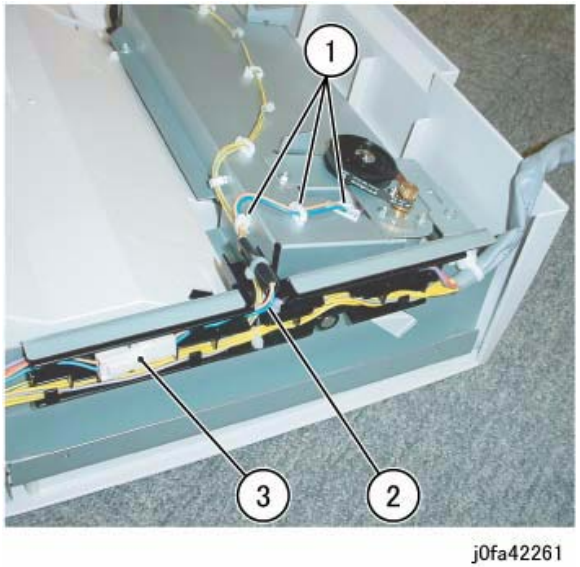

Figure 1 Disconnecting the Connector

7. Remove the Bracket (Figure 2):
   (1)Remove Screw.
   (2)Remove Bracket.

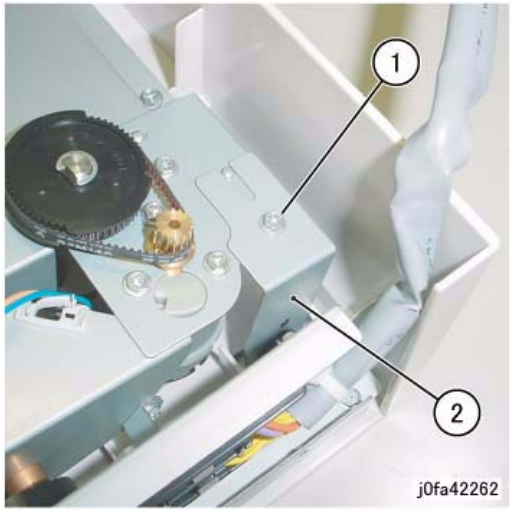

Figure 2 Removing the Bracket

8. Remove the Stacker Motor Assembly (Figure 3):
   (1)Remove Screws (2).
   (2)Remove Stacker Motor Assembly.

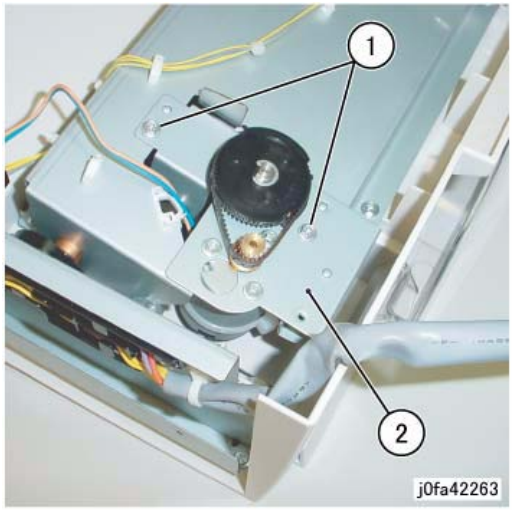

Figure 3 Removing the Stacker Motor Assembly

9. Remove the Stacker Motor (Figure 4):
   (1)Remove Screws (3).
   (2)Remove Belt from Pulley.

(3)Remove Stacker Motor.

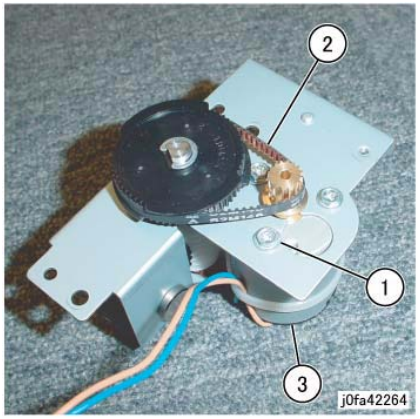

Figure 4 Removing the Stacker Motor)

Replacement

1. Reverse the removal procedure for replacement.
2. Install the Stacker Motor as shown in Figure 5.

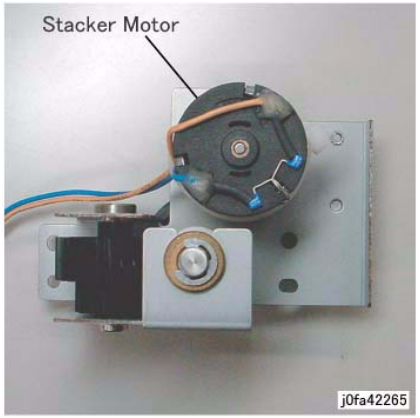

Figure 5 Installing the Stacker Motor

REP 12.19 Stacker Sensor

Parts List on PL 22.8

Removal

1. Switch off the power and disconnect the power cord.
2. Remove the Integrated Office Finisher from the machine (REP 12.1).
3. Remove the Rear Cover (PL 22.1)
4. Turn over the Integrated Office Finisher.
5. Remove the Tray Cover (PL 22.2)
6. Remove the Stacker Sensor Assembly (Figure 1):
   (1)Release the wire from the Clamp.
   (2)Remove Screw.
   (3)Remove Stacker Sensor Assembly.
   (4)Disconnect the Sensor Connector and remove Sensor from Bracket (5)

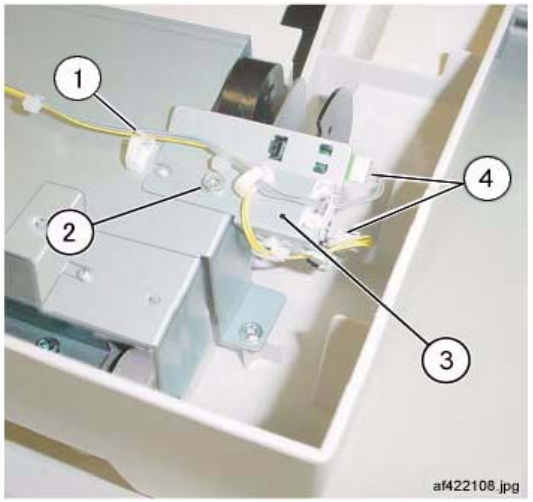

Figure 1 Removing the Stacker Stack Sensor Assembly

Replacement

1. Reverse the removal procedure for replacement.

REP 12.20 Compiler Assembly

Parts List on PL 22.9

Removal

1. Switch off the power and disconnect the power cord.
2. Remove the Integrated Office Finisher from the machine (REP 12.1).
3. Remove the Inner Front Cover (PL 22.1)
4. Remove the Rear Cover (PL 22.1)
5. Turn over the Integrated Office Finisher.
6. Remove the Bottom Cover (PL 22.2)
7. Remove the Tray Cover (PL 22.2)
8. Remove the Connector Bracket (Figure 1):
   (1)Release Clamps (3) and remove the wire.
   (2)Disconnect Connectors (5).
   (3)Remove Screws (2).
   (4)Remove Connector Bracket.

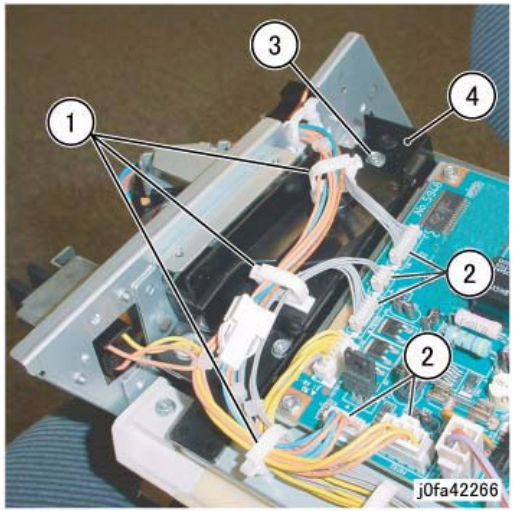

Figure 1 Removing the Connector Bracket

9. Remove the Bottom Plate (Figure 2):
   (1)Release Clamps (5) and remove the wire.
   (2)Disconnect Connectors (8).
   (3)Remove Wire from Hook.
   (4)Remove Screws (4).
   (5)Remove Bottom Plate.

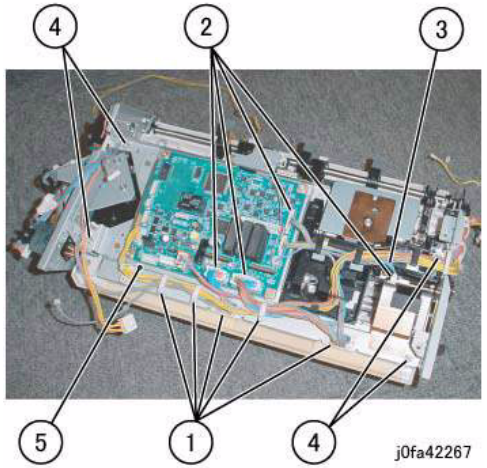

Figure 2 Removing the Bottom Plate

10. Release the Clamp from the wire (Figure 3):
    (1)Release Clamp and remove the wire.

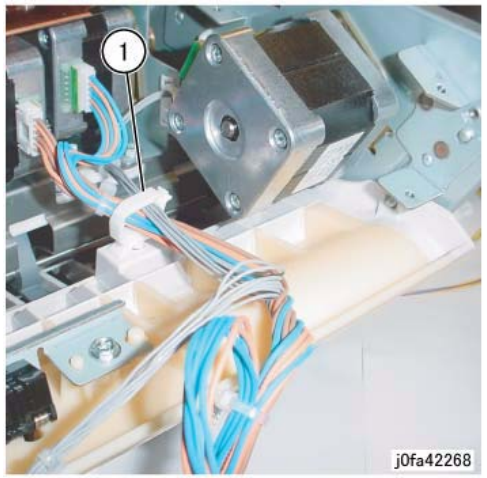

Figure 3 Releasing the Clamp

11. Remove the Stacker Tray (Figure 4):
    (1)Release wires from Clamps (5)
    (2)Disconnect the Connector
    (3)Remove Screws (7)
    (4)Remove the Stacker Tray

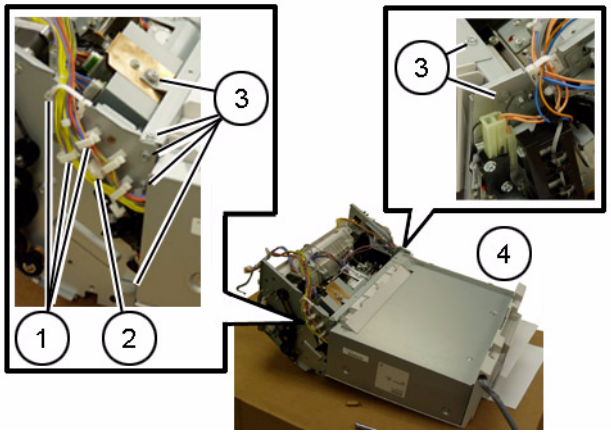

Figure 4 Removing the Stacker Tray

12. Remove the front Self-tapping Screw (Figure 5):
    (1)Remove Self-tapping Screw.

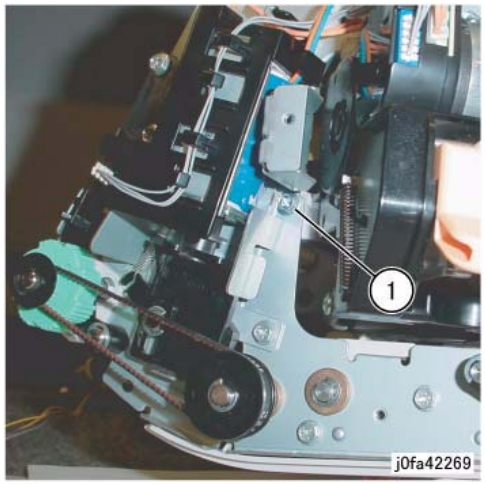

Figure 5 Removing the Self-tapping Screw

13. Remove the rear Screw (Figure 6):
    (1)Remove Screw.

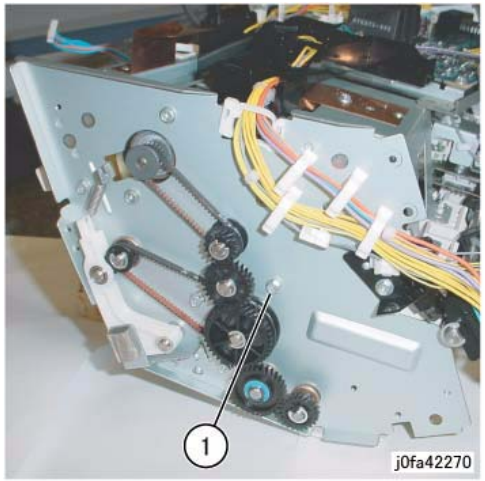

Figure 6 Removing the Screw

14. Remove the Compiler Assembly (Figure 7):
    (1)Remove Compiler Assembly.

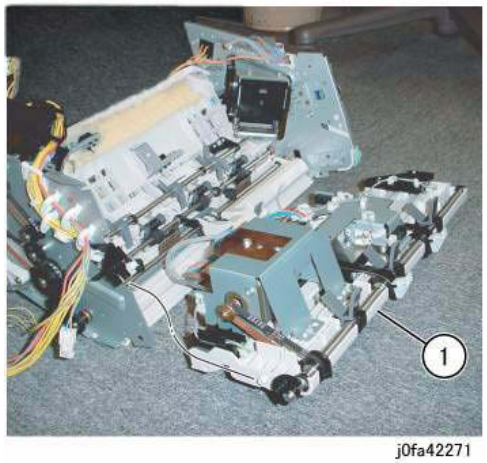

Figure 7 Removing the Compiler Assembly

Replacement

1. Reverse the removal procedure for replacement.

REP 12.21 Set Clamp Shaft

Parts List on PL 22.9

Removal

1. Switch off the power and disconnect the power cord.
2. Remove the Integrated Office Finisher from the machine (PL 22.1).
3. Remove the Compiler Assembly (REP 12.20)
4. Remove the Bracket Assembly (Figure 1):
   (1)Release Clamps (2) and remove the wire.
   (2)Remove Screws (2).
   (3)Remove Bracket Assembly.

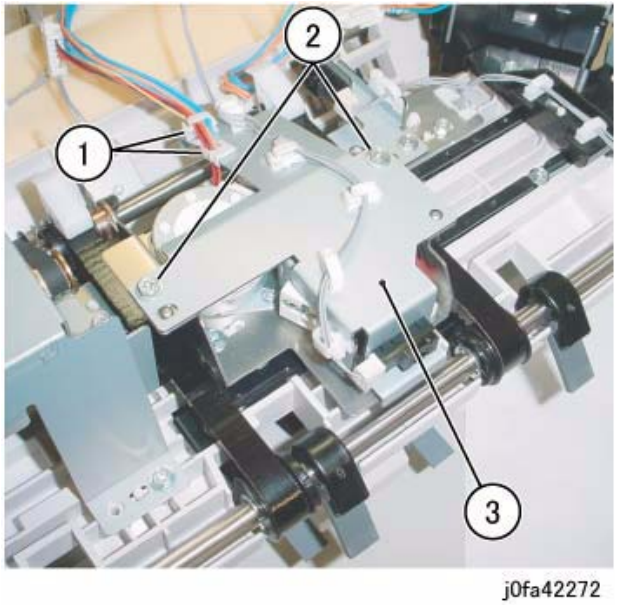

Figure 1 Removing the Bracket Assembly

5. Remove the KL-Clips from the Eject Shaft (Figure 2):
   (1)Remove KL-Clips (2).

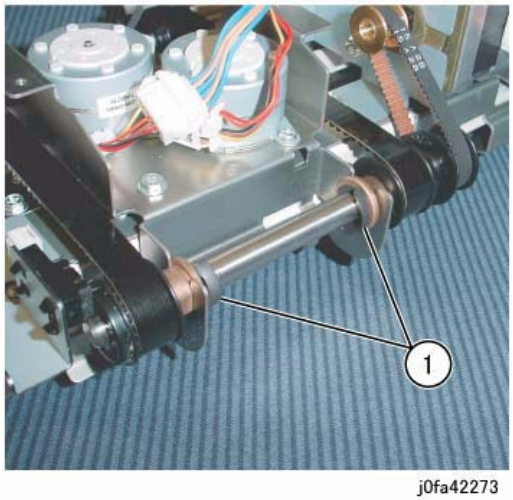

Figure 2 Removing the KL-Clips

6. Remove the Eject Shaft from the Front/Rear Tamper Motor Assembly (Figure 3):
   (1)Move Bearings (2) in the direction of the arrow.
   (2)Remove Eject Shaft in the direction of the arrow.
   (3)Remove Belt from Pulley.

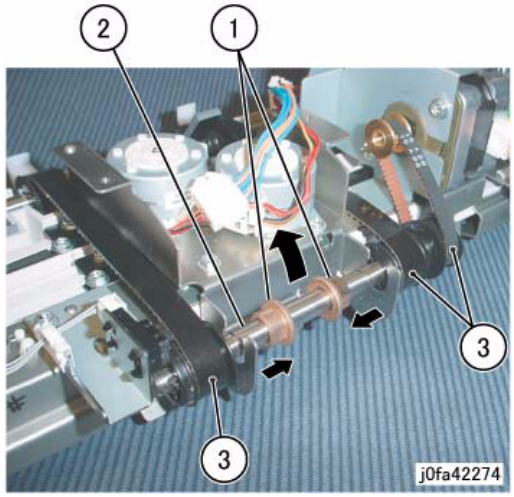

Figure 3 Removing the Eject Shaft

7. Remove the Actuator and the Bearing (Figure 4):
   (1)Remove E-Clip.

(2)Remove Actuator.
(3)Remove E-Clip.
(4)Remove Bearing.

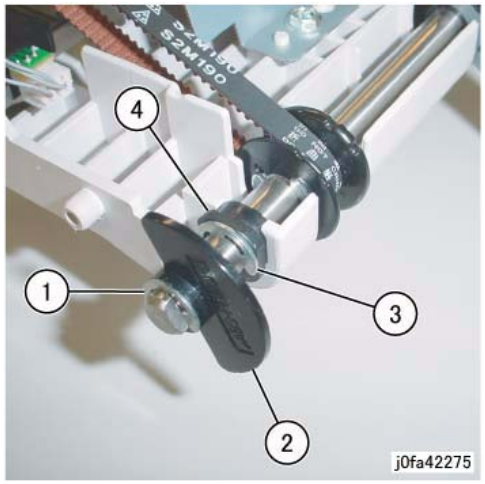

Figure 4 Removing the Actuator and Bearing

8. Remove the Bearing (Figure 5):
   (1)Remove E-Clip.
   (2)Remove Bearing.

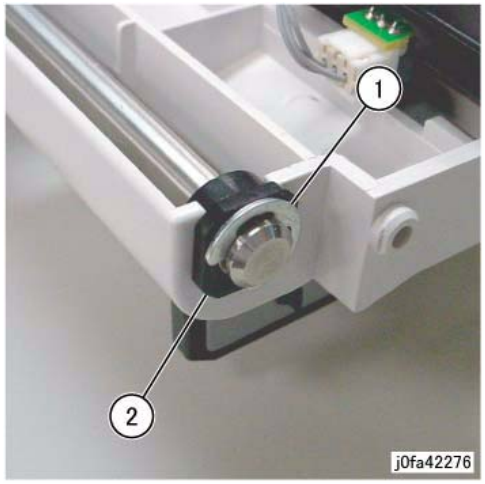

Figure 5 Removing the Bearing

9. Remove the Set Clamp Shaft (Figure 6):
   (1)Move Set Clamp Shaft in the direction of the arrow.
   (2)Remove Belts (3) from Pulleys (3).
   (3)Remove Set Clamp Shaft in the direction of the arrow.

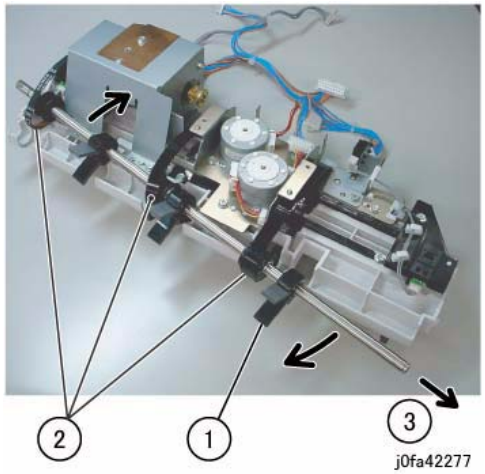

Figure 6 Removing the Set Clamp Shaft

Replacement

1. Reverse the removal procedure for replacement.
2. Install and align the Eject Belt with marks on the Pulleys (Figure 7):

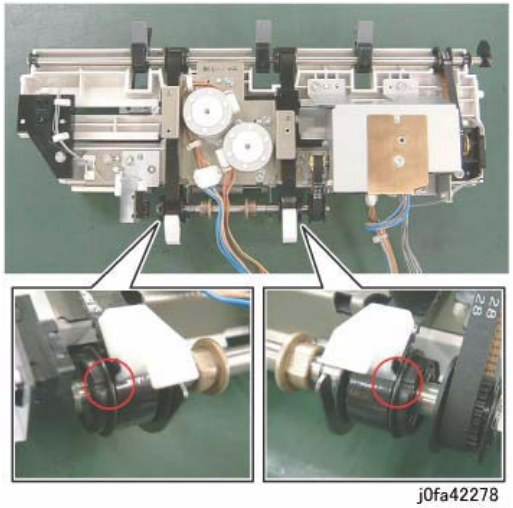

Figure 7 Installing the Eject Belt

REP 12.22 Eject Belt

Parts List on PL 22.9

Removal

1. Switch off the power and disconnect the power cord.
2. Remove the Integrated Office Finisher from the machine (PL 22.1).
3. Remove the Compiler Assembly (REP 12.20)
4. Remove the Front/Rear Tamper Motor Assembly (REP 12.26)
5. Move the Eject Home Sensor Assembly (Figure 1):
   (1)Remove Screw.
   (2)Move Eject Home Sensor Assembly.

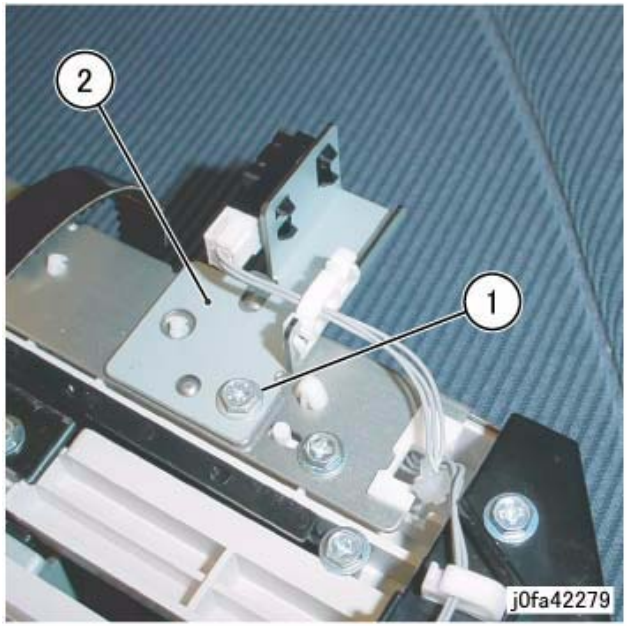

Figure 1 Moving the Eject Home Sensor Assembly (j0fa42279)

6. Remove the Eject Belt (Figure 2):
   (1)Move the blades of Set Clamp Shaft in the direction of the arrow.
   (2)Remove Eject Belt in the direction of the arrow.

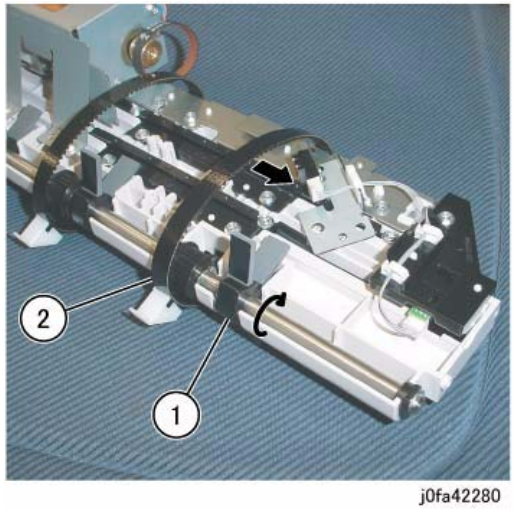

Figure 2 Removing the Eject Belt

Replacement

1. Reverse the removal procedure for replacement.
2. Install and align the Eject Belt with marks on the Pulleys (Figure 3), (Figure 4)

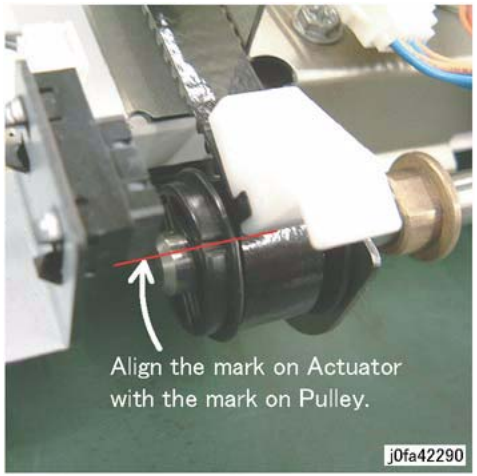

Figure 3 Eject Belt Alignment

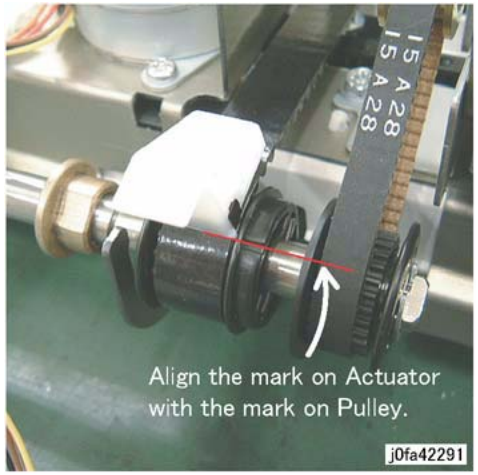

Figure 4 Eject Belt Alignment

REP 12.23 Eject/Set Clamp Motor Assembly

Parts List on PL 22.9

Removal

1. Switch off the power and disconnect the power cord.
2. Remove the Integrated Office Finisher from the machine (REP 12.1).
3. Remove the Inner Front Cover (PL 22.1)
4. Remove the Rear Cover (PL 22.1)
5. Turn over the Integrated Office Finisher.
6. Remove the Bottom Cover (PL 22.2)
7. Remove the Connector Bracket (Figure 1):
   (1)Release Clamps (3) and remove the wire.
   (2)Disconnect Connectors (5).
   (3)Remove Screws (2).
   (4)Remove Connector Bracket.

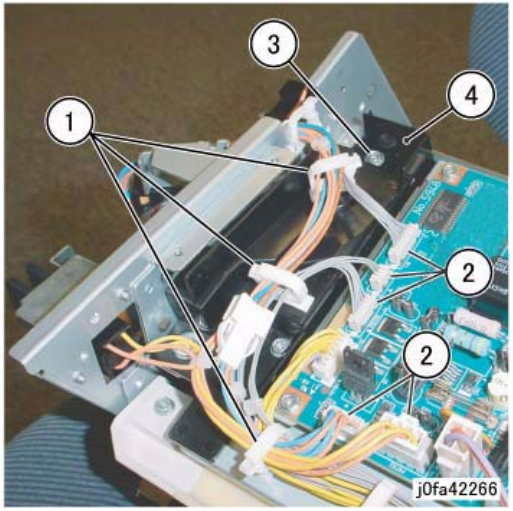

Figure 1 Removing the Connector Bracket

8. Remove the Bottom Plate (Figure 2):
   (1)Release Clamps (5) and remove the wire.
   (2)Disconnect Connectors (8).
   (3)Remove Wire from Hook.
   (4)Remove Screws (4).
   (5)Remove Bottom Plate.

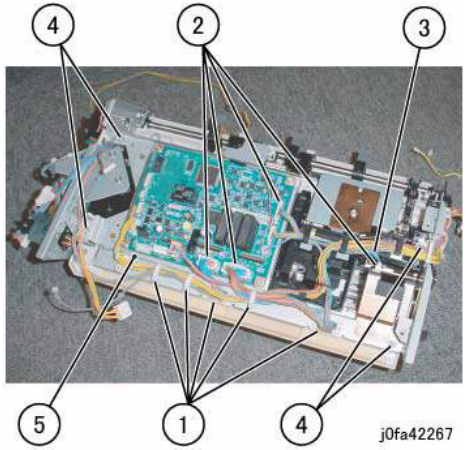

Figure 2 Removing the Bottom Plate

9. Remove the Stacker Tray (Figure 3):
   (1)Release wires from Clamps (5)
   (2)Disconnect the Connector
   (3)Remove Screws (7)
   (4)Remove the Stacker Tray

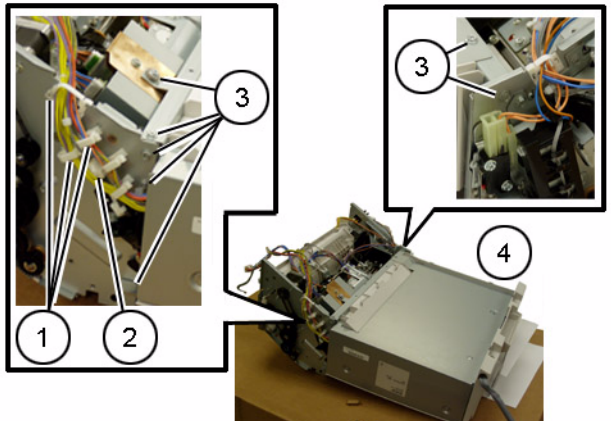

Figure 3 Removing the Stacker Tray

10. Remove the screws securing the Eject/Set Clamp Motor Assembly (Figure 4):
    (1)Release Clamps (2) and remove the wire.
    (2)Remove Screws (2).
    (3)Remove Self-tapping Screws (2).

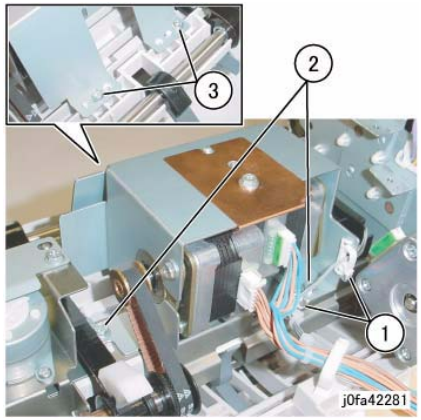

Figure 4 Removing Screws

11. Remove the Eject/Set Clamp Motor Assembly (Figure 5):
    (1)Remove Belts (2) from Pulley.
    (2)Remove Eject/Set Clamp Motor Assembly.

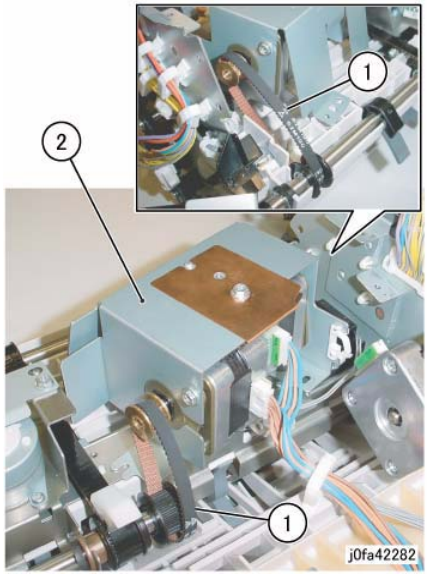

Figure 5 Removing the Eject/Set Clamp Motor Assembly

Replacement

1. Reverse the removal procedure for replacement.

REP 12.24 Rear Tamper Home Sensor

Parts List on PL 22.9

Removal

1. Switch off the power and disconnect the power cord.
2. Remove the Integrated Office Finisher from the machine (REP 12.1).
3. Remove the Inner Front Cover (PL 22.1)
4. Remove the Rear Cover (PL 22.1)
5. Turn over the Integrated Office Finisher.
6. Remove the Bottom Cover (PL 22.2)
7. Remove the Connector Bracket (Figure 1):
   (1)Release Clamps (3) and remove the wire.
   (2)Disconnect Connectors (5).
   (3)Remove Screws (2).
   (4)Remove Connector Bracket.

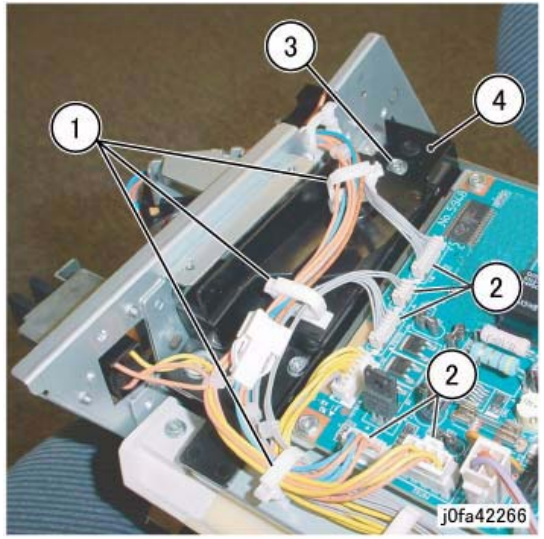

Figure 1 Removing the Connector Bracket

8. Remove the Bottom Plate (Figure 2):
   (1)Release Clamps (5) and remove the wire.
   (2)Disconnect Connectors (8).
   (3)Remove Wire form Hook.
   (4)Remove Screw (4).
   (5)Remove Bottom Plate.

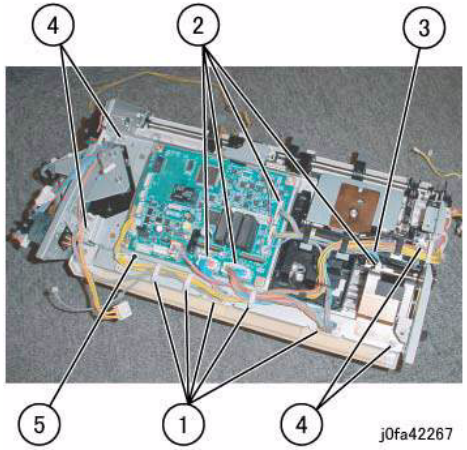

Figure 2 Moving the Bottom Plate

9. Remove the Rear Tamper Home Sensor Assembly (Figure 3):
   (1)Release Clamps (2) and remove the wire.
   (2)Remove Self-tapping Screw.
   (3)Move Rear Tamper Home Sensor Assembly in order to disconnect the connector.

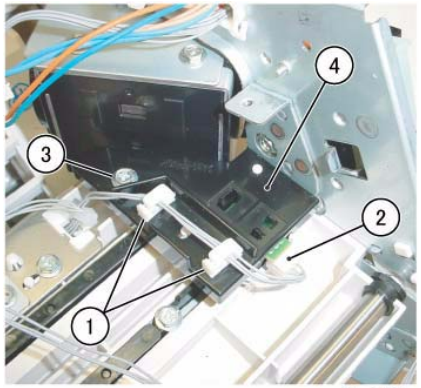

Figure 3 Removing the Rear Tamper Home Sensor Assembly

10. Remove the Rear Tamper Home Sensor (Figure 4):
    (1)Remove Rear Tamper Home Sensor from the bracket.

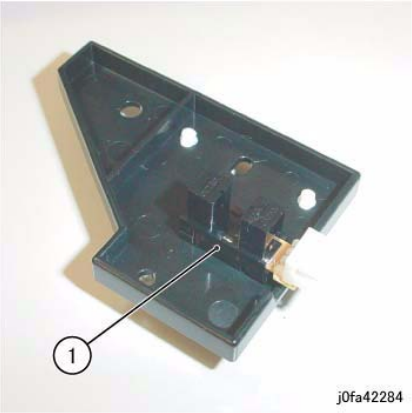

Figure 4 Removing the Rear Tamper Home Sensor

Replacement

1. Reverse the removal procedure for replacement.

REP 12.25 Eject Shaft Assembly

Parts List on PL 22.9

Removal

1. Switch off the power and disconnect the power cord.
2. Remove the Integrated Office Finisher from the machine (PL 22.1).
3. Remove the Compiler Assembly (REP 12.20)
4. Remove the Bracket Assembly (Figure 1):
   (1)Release Clamps (2) and remove the wire.
   (2)Remove Screws (2).
   (3)Remove Bracket Assembly.

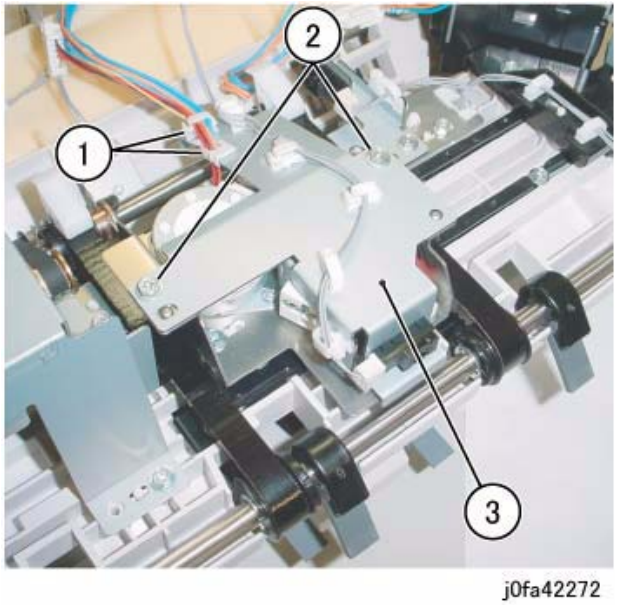

Figure 1 Removing the Bracket Assembly

5. Remove the KL-Clips from the Eject Shaft (Figure 2):
   (1)Remove KL-Clips (2).

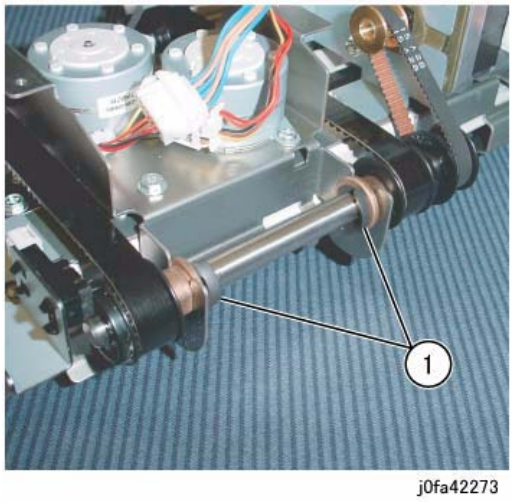

Figure 2 Removing the KL-Clips

6. Remove the Eject Shaft from the Front/Rear Tamper Motor Assembly (Figure 3):
   (1)Move Bearings (2) in the direction of the arrow.
   (2)Remove Eject Shaft in the direction of the arrow.
   (3)Remove Belt from Pulley.

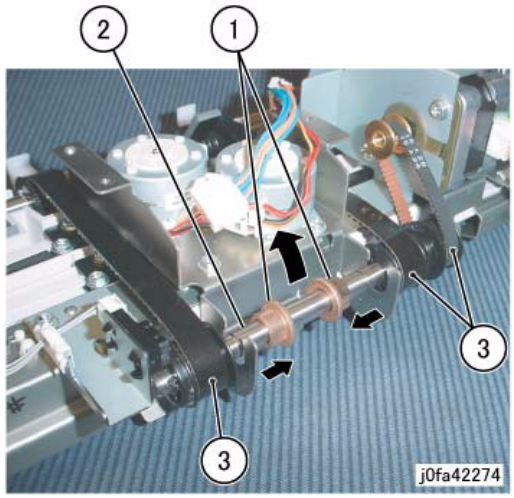

Figure 3 Removing the Eject Shaft

Replacement

1. Reverse the removal procedure for replacement.

2. Install and align the Eject Belt with marks on the Pulleys (Figure 4) (Figure 5):

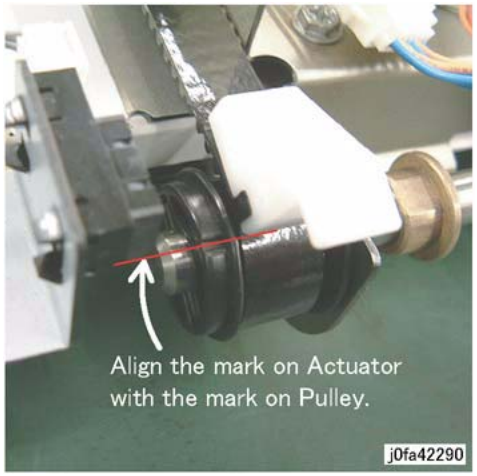

Figure 4 Align Eject Belt

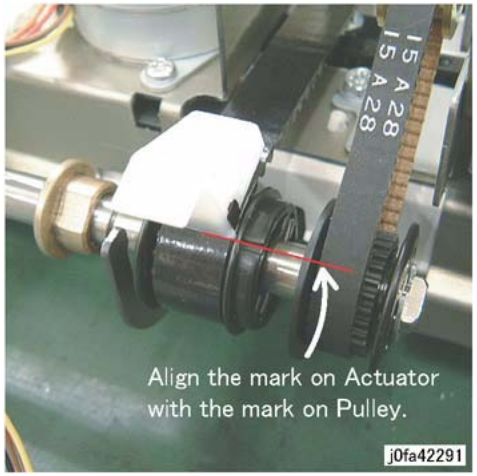

Figure 5 Align Eject Belt

REP 12.26 Front /Rear Tamper Motor Assembly

Parts List on PL 22.10

Removal

1. Switch off the power and disconnect the power cord.
2. Remove the Integrated Office Finisher from the machine (PL 22.1).
3. Remove the Compiler Assembly (REP 12.20)
4. Remove the Bracket Assembly (Figure 1):
   (1)Release Clamps (2) and remove the wire.
   (2)Remove Screws (2).
   (3)Remove Bracket Assembly.

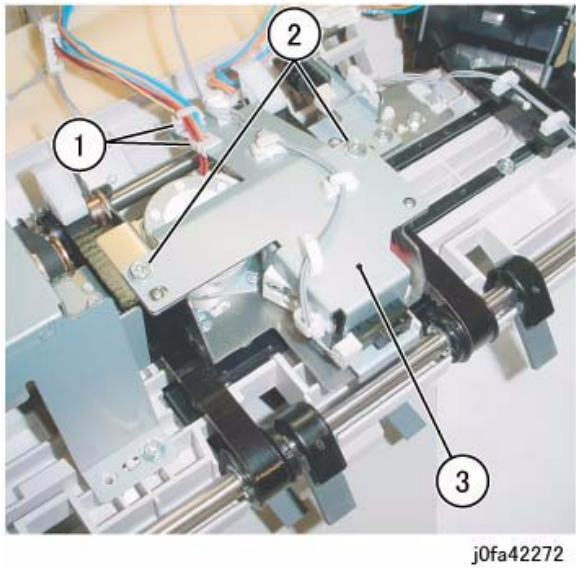

Figure 1 Removing the Bracket Assembly

5. Remove the KL-Clips from the Eject Shaft (Figure 2):
   (1)Remove KL-Clips (2).

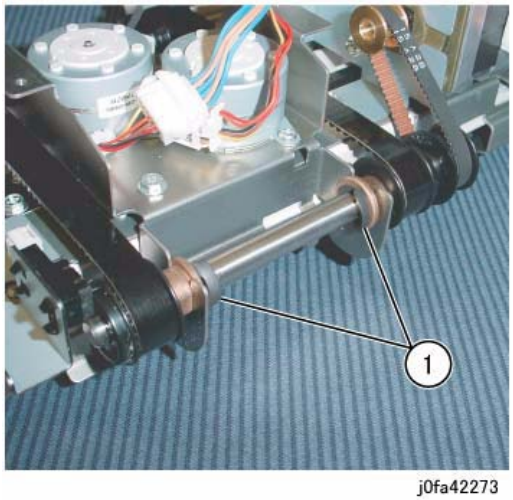

Figure 2 Removing the KL-Clips

6. Remove the Eject Shaft from the Front/Rear Tamper Motor Assembly (Figure 3):
   (1)Move Bearings (2) in the direction of the arrow.
   (2)Remove Eject Shaft in the direction of the arrow.
   (3)Remove Belt from Pulley.

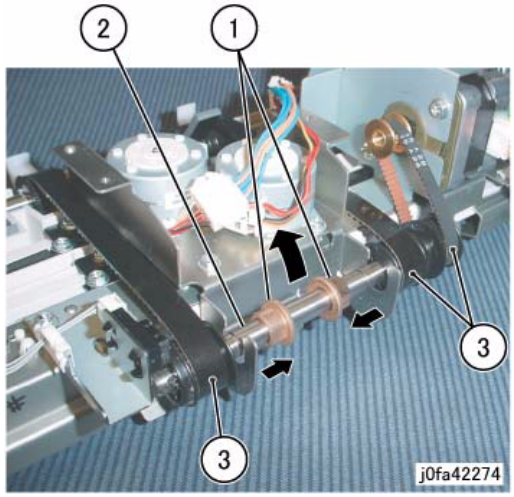

Figure 3 Removing the Eject Shaft

7. Remove the Front/Rear Tamper Motor Assembly (Figure 4):
   (1)Remove Self-tapping Screws (2).

(2)Remove Screw.

(3)Remove Front/Rear Tamper Motor Assembly.

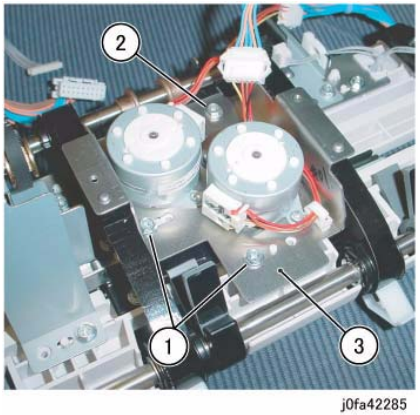

Figure 4 Removing the Front/Rear Tamper Motor Assembly

Replacement

1. Reverse the removal procedure for replacement.
2. Install and align the Eject Belt with marks on the Pulleys (Figure 5) (Figure 6):

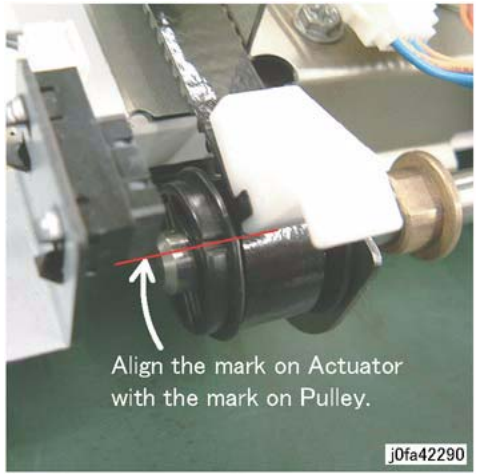

Figure 5 Align Eject Belt

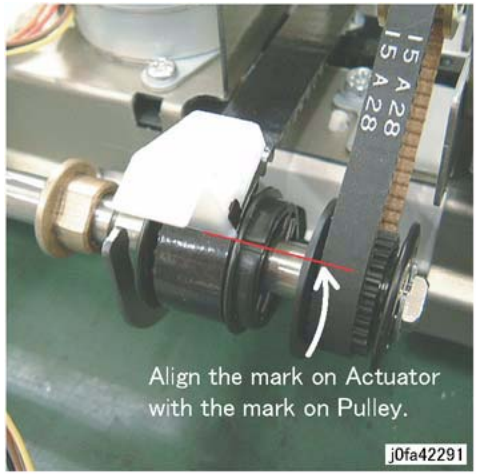

Figure 6 Align Eject Belt

REP 12.27 Front Tamper Home Sensor

Parts List on PL 22.10

Removal

1. Switch off the power and disconnect the power cord.
2. Remove the Integrated Office Finisher from the machine (REP 12.1).
3. Remove the Inner Front Cover (PL 22.1)
4. Remove the Rear Cover (PL 22.1)
5. Turn over the Integrated Office Finisher.
6. Remove the Bottom Cover (PL 22.2)
7. Remove the Connector Bracket (Figure 1):
   (1)Release Clamps (3) and remove the wire.
   (2)Disconnect Connectors (5).
   (3)Remove Screws (2).
   (4)Remove Connector Bracket.

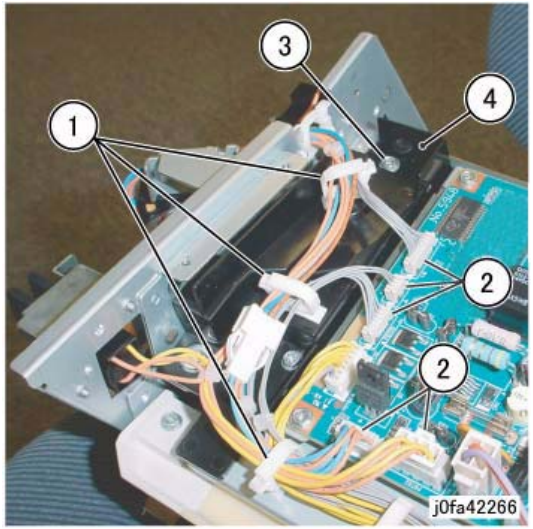

Figure 1 Removing the Connector Bracket

8. Remove the Bottom Plate (Figure 2):
   (1)Release Clamps (5) and remove the wire.
   (2)Disconnect Connectors (8).
   (3)Remove Wire from Hook.
   (4)Remove Screws (4).
   (5)Remove Bottom Plate.

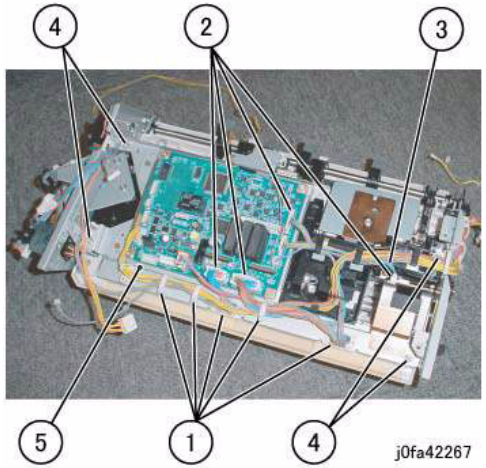

Figure 2 Removing the Bottom Plate

9. Remove the Front Tamper Home Sensor Assembly (Figure 3):
   (1)Remove Screw.
   (2)Remove Front Tamper Home Sensor Assembly.

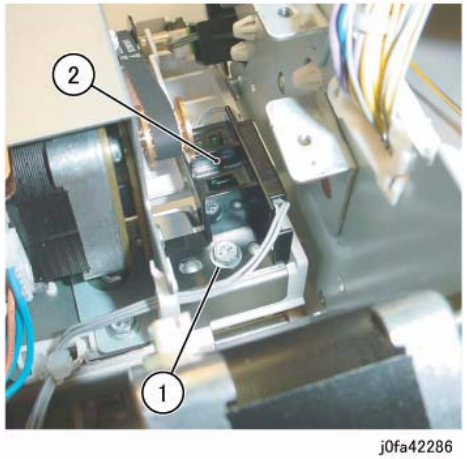

Figure 3 Removing the Front Tamper Home Sensor Assembly

10. Remove the Front Tamper Home Sensor Assembly (Figure 4):
    (1)Disconnect Connector.
    (2)Remove Front Tamper Home Sensor Assembly.

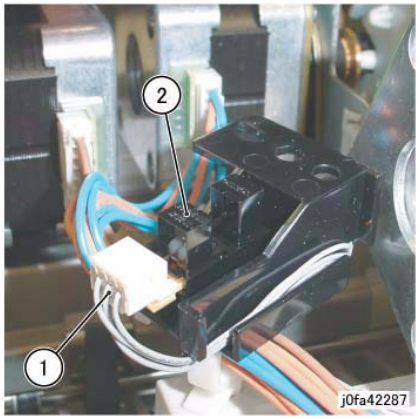

Figure 4 Removing the Front Tamper Home Sensor

Replacement

1. Reverse the removal procedure for replacement.

REP 12.28 Eject Clamp Home Sensor

Parts List on PL 22.10

Removal

1. Switch off the power and disconnect the power cord.
2. Remove the Integrated Office Finisher from the machine (REP 12.1).
3. Turn over the Integrated Office Finisher.
4. Remove the Bottom Cover (PL 22.2)
5. Remove the Connector Bracket (Figure 1):
   (1)Release Clamps (3) and remove the wire.
   (2)Disconnect Connectors (5).
   (3)Remove Screws (2).
   (4)Remove Connector Bracket.

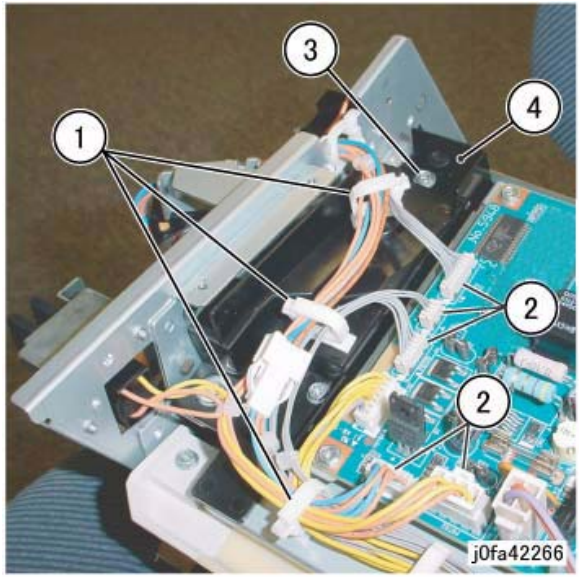

Figure 1 Removing the Connector Bracket

6. Remove the Bottom Plate (Figure 2):
   (1)Release Clamps (5) and remove the wire.
   (2)Disconnect Connectors (8).
   (3)Remove Wire from Hook.
   (4)Remove Screws (4).
   (5)Remove Bottom Plate.

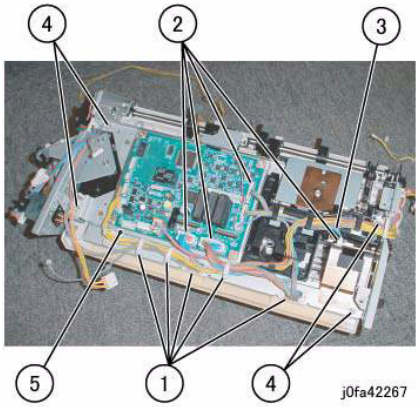

Figure 2 Removing the Bottom Plate

7. Remove the Eject Home Sensor (Figure 3):
   (1)Release Clamp and remove the wire.
   (2)Disconnect Connector.
   (3)Remove Eject Home Sensor from the bracket.

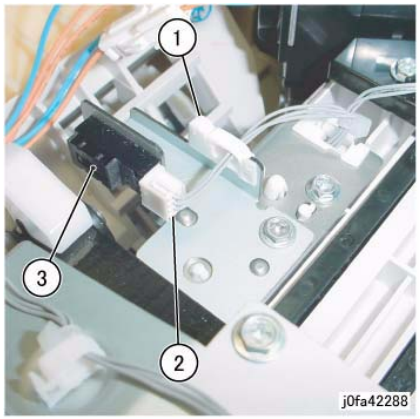

Figure 3 Removing the Eject Home Sensor

Replacement

1. Reverse the removal procedure for replacement.

REP 12.29 Stack Height Sensor

Parts List on PL 22.10

Removal

1. Switch off the power and disconnect the power cord.
2. Remove the Integrated Office Finisher from the machine (REP 12.1).
3. Remove the Inner Front Cover (PL 22.1)
4. Remove the Rear Cover (PL 22.1)
5. Turn over the Integrated Office Finisher.
6. Remove the Bottom Cover (PL 22.2)
7. Remove the Connector Bracket (Figure 1):
   (1)Release Clamps (3) and remove the wire.
   (2)Disconnect Connectors (5).
   (3)Remove Screws (2).
   (4)Remove Connector Bracket.

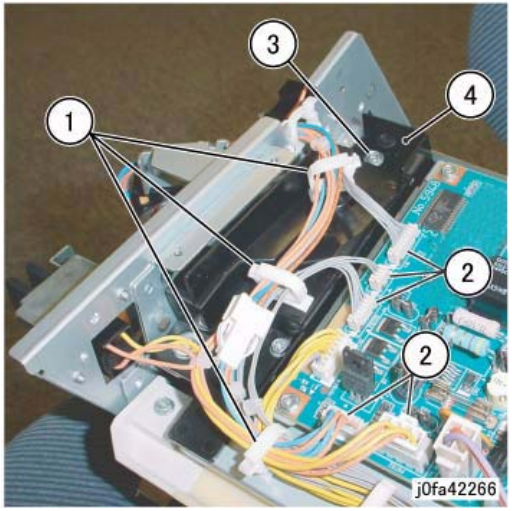

Figure 1 Removing the Connector Bracket

8. Remove the Bottom Plate (Figure 2):
   (1)Release Clamps (5) and remove the wire.
   (2)Disconnect Connectors (8).
   (3)Remove Wire from Hook.
   (4)Remove Screws (4).
   (5)Remove Bottom Plate.

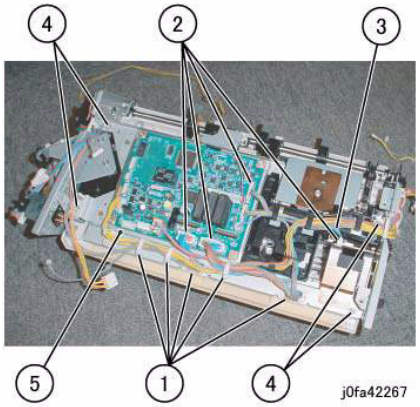

Figure 2 Removing the Bottom Plate

9. Remove the Stacker Tray (Figure 3):
   (1)Release wires from Clamps (5)
   (2)Disconnect the Connector
   (3)Remove Screws (7)
   (4)Remove the Stacker Tray

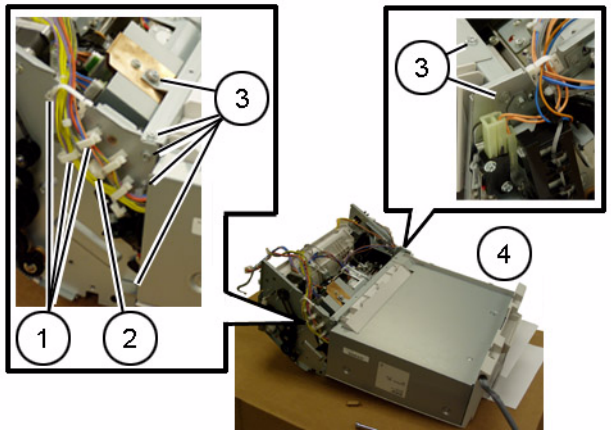

Figure 3 Removing the Stacker Tray

10. Remove the Bracket Assembly (Figure 4):
    (1)Release Clamps (2) and remove the wire.
    (2)Remove Screws (2).
    (3)Remove Bracket Assembly.

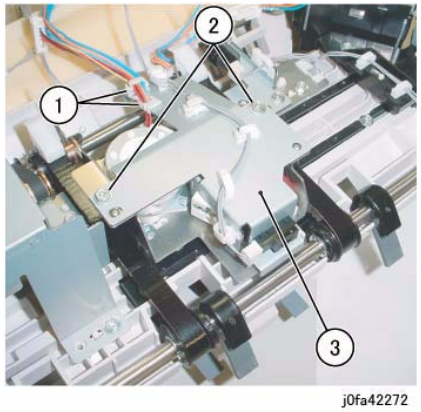

Figure 4 Removing the Bracket Assembly

11. Remove the Stack Height Sensor (Figure 5):
    (1)Remove Clamp.
    (2)Release Clamps (4) and remove the wire.
    (3)Disconnect Connector.
    (4)Remove Stack Height Sensor from the bracket.

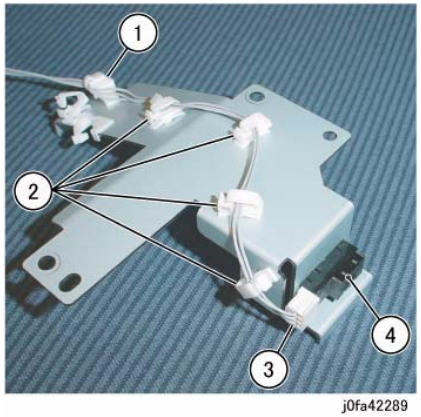

Figure 5 Removing the Stack Height Sensor

Replacement

1. Reverse the removal procedure for replacement.

REP 13.1 H-Transport Assembly (Office Finisher LX)

Parts List on PL 23.1

Removal

1. Switch off the power and disconnect the power cord.
2. Undock the Finisher Assembly (REP 13.5).
3. Move the H-Transport Assembly (Figure 1).

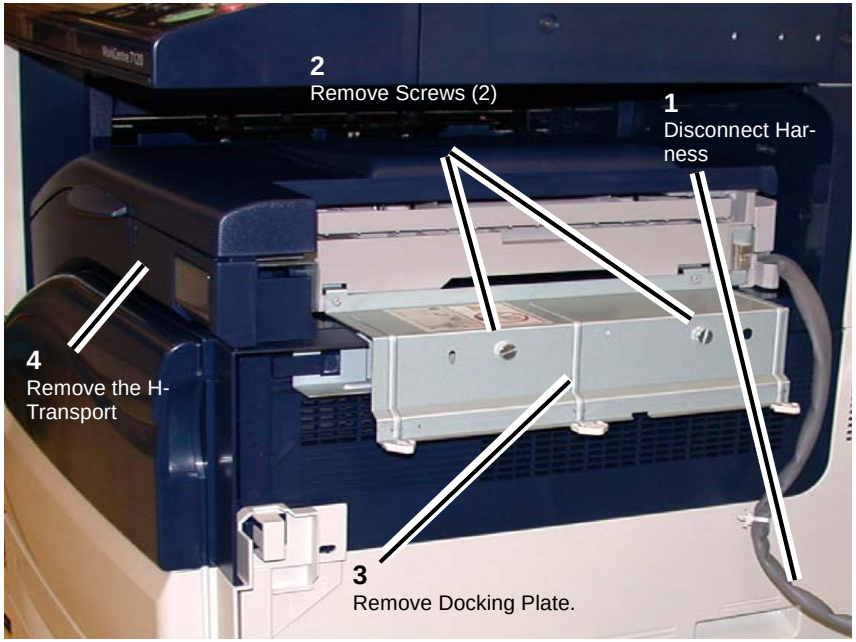

Figure 1 Removing the Docking Bracket

Replacement

1. To install, carry out the removal steps in reverse order.

REP 13.2 Hole Punch Assembly (Office Finisher LX)

Parts List on PL 23.2

Removal

1. Switch off the power and disconnect the power cord.
2. Open the H-Transport Top Cover and hold it open.
3. Open the H-Transport Front Cover.
4. Remove the Hole Punch Assembly (Figure 1).

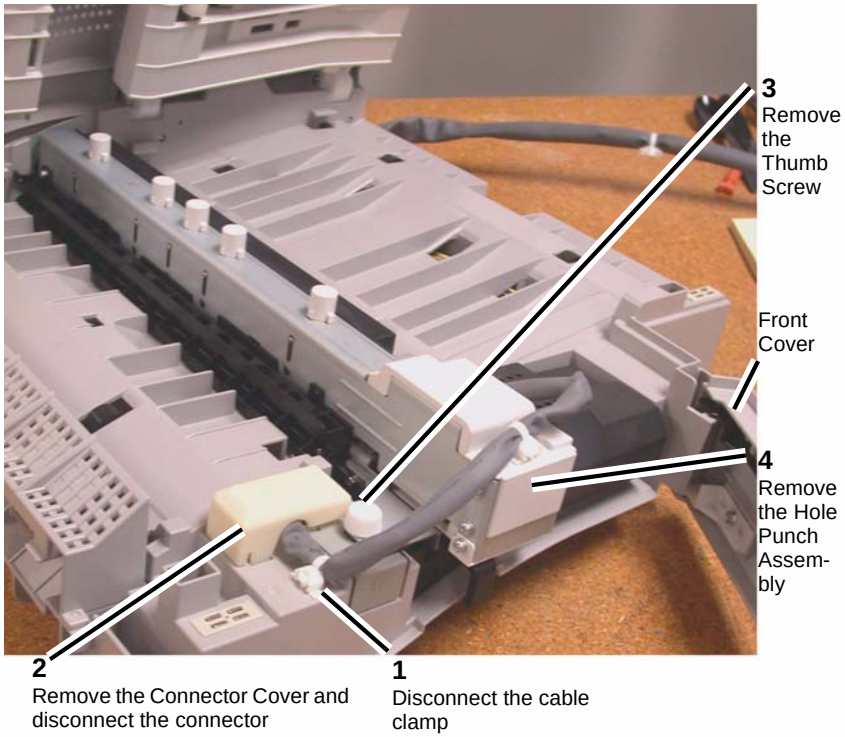

Figure 1 Removing the Hole Punch Assembly

Replacement

1. Insert the Hole Punch Assembly rear locating pin into the H-Transport frame.
2. Install the Hole Punch Assembly in reverse order of removal.
3. Perform ADJ 12.1 Finisher LX Hole Punch Position

REP 13.3 H-Transport Belt (Office Finisher LX)

Parts List on PL 23.4

Removal

1. Switch off the power and disconnect the power cord.
2. Remove the H-Transport Assembly (REP 13.1).
3. Remove the screws (2) on the H-Transport Rear Cover and remove the Cover.
4. Loosen the screws (2) on the Tension Bracket (Figure 1).
5. Remove the Belt.

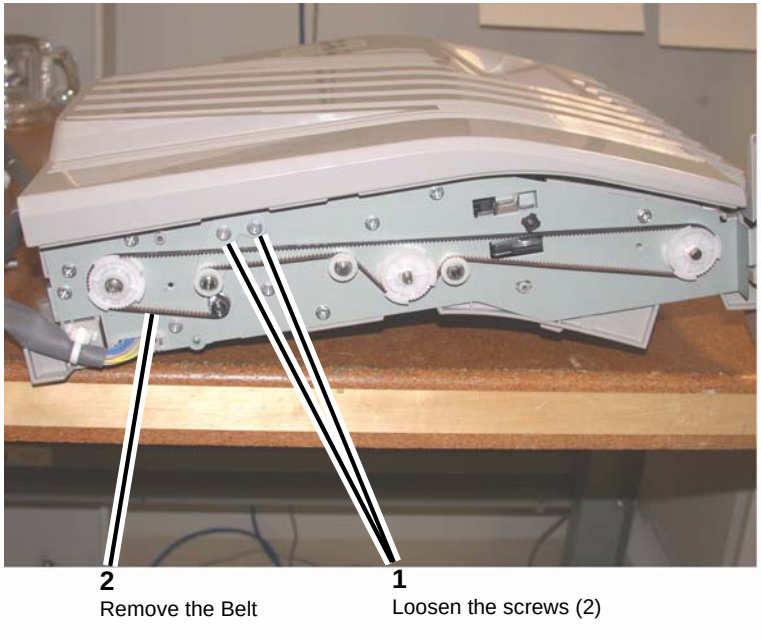

Figure 1 Removing the H-Transport Belt

Replacement

Install the H-Transport Belt in reverse order of removal.

REP 13.4 H-Transport Motor (Office Finisher LX)

Parts List on PL 23.4

Removal

1. Switch off the power and disconnect the power cord.
2. Remove the H-Transport Assembly (REP 13.1).
3. Remove the H-Transport Rear Cover.
4. Place the H-Transport top down on a work surface.
5. Remove the H-Transport motor (Figure 1).

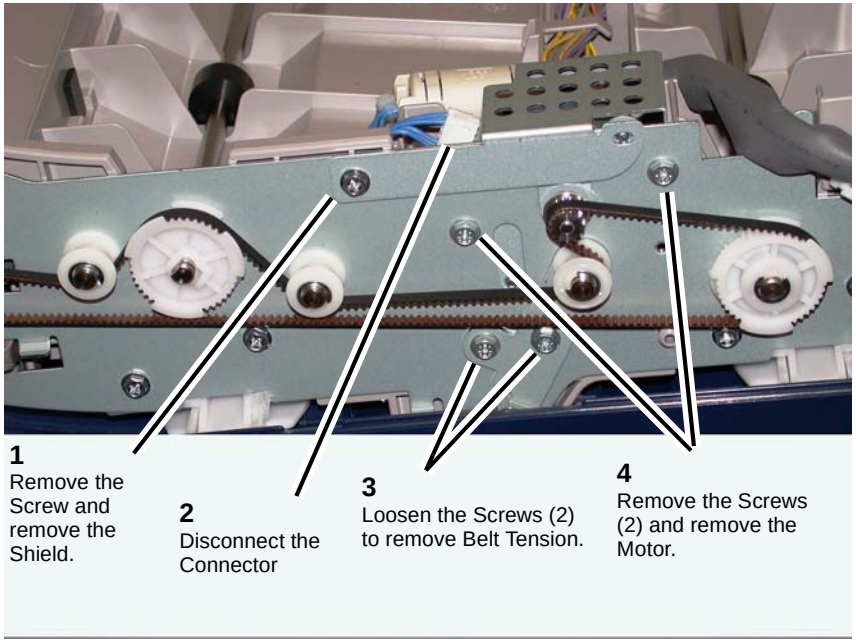

Figure 1 Removing the H-Transport Drive Motor

Replacement

Replace in reverse order of removal.

REP 13.5 Finisher LX Undocking

Parts List on PL 23.1

Removal

1. Switch off the power and disconnect the Printer power cord.
2. Disconnect the Finisher Power Cord, the H-Transport Connector and the Finisher Connector from the IOT.

CAUTION

The Finisher is unstable when not docked with the Printer. Use care when handling an undocked Finisher so that it does not fall over.

3. Rotate the Feet (2) to free the Finisher. (Figure 1)

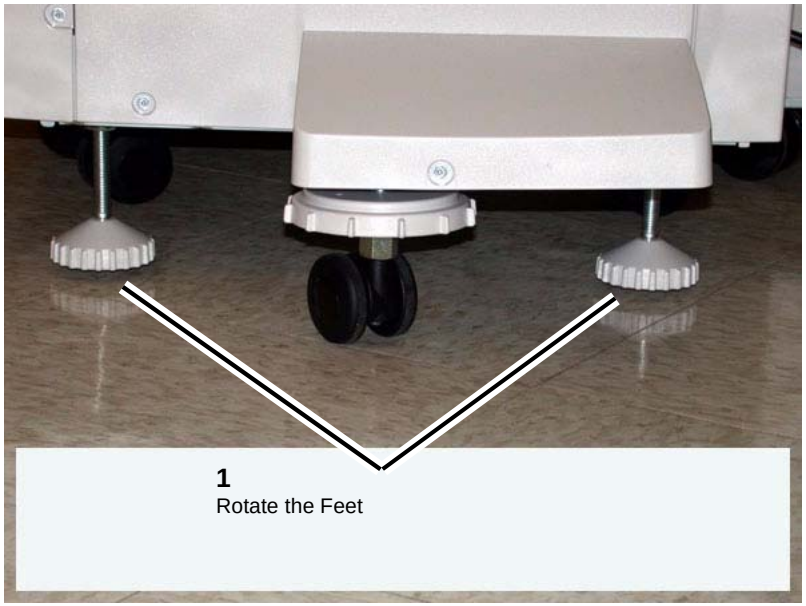

Figure 1 Finisher Feet

4. Open the Front Door of the Finisher.
5. Release the Screw that secures the Docking Plate and detach the Finisher.
   (1) Remove the Screw.
   (2) Pull the Docking Plate Lever towards you and detach the Finisher.(Figure 2)

Figure 2 Finisher Lever

Replacement

1. Align the Printer Docking Bracket with the cut outs in the Finisher Docking Bracket.
2. Mate the Printer and the Finisher until it latches.
3. Check that the Finisher is firmly latched to the Printer.
4. Perform the remainder of the replacement procedure in reverse order of removal.

REP 13.6 Front Cover Assembly (Office Finisher LX)

Parts List on PL 23.6

Removal

1. Switch off the power and disconnect the power cord.
2. Undock the Finisher (REP 13.5).

CAUTION

Do not drop the Booklet Maker Thumb screw into the Finisher.

3. Remove the Booklet Maker and set aside (REP 13.31).
4. Open the Finisher upper Front Door.
5. Remove the screws (5).
6. Remove the Front Cover Assembly.

Replacement

1. To install, carry out the removal steps in reverse order.

REP 13.7 Rear Upper Cover (Office Finisher LX)

Parts List on PL 23.6

Removal

1. Switch off the power and disconnect the power cord.
2. Undock the Finisher (REP 13.5).
3. Remove the Booklet Maker (REP 13.31).
4. Remove the Rear Upper Cover.
   (1) Remove the screws (4).
   (2) Remove the Rear Upper Cover.

Replacement

1. To install, carry out the removal steps in reverse order.

REP 13.8 Rear Lower Cover (Office Finisher LX)

Parts List on PL 23.6

Removal

1. Switch off the power and disconnect the power cord.
2. Undock the Finisher (REP 13.5).
3. Remove the Rear Lower Cover.
   (1) Remove the screws (3).
   (2) Remove the Cover.

Replacement

1. To install, carry out the removal steps in reverse order.

REP 13.9 Eject Cover (Office Finisher LX)

Parts List on PL 23.10

Removal

1. Switch off the power and disconnect the power cord.
2. Remove the Eject Cover (Figure 1).
   (1) Unlatch the Eject Cover, and move it to the left.
   (2) Remove the Retaining Screw (1).
   (3) Push the Latch through the hole in the Cover.
   (4) Remove the Cover by moving it to the left.

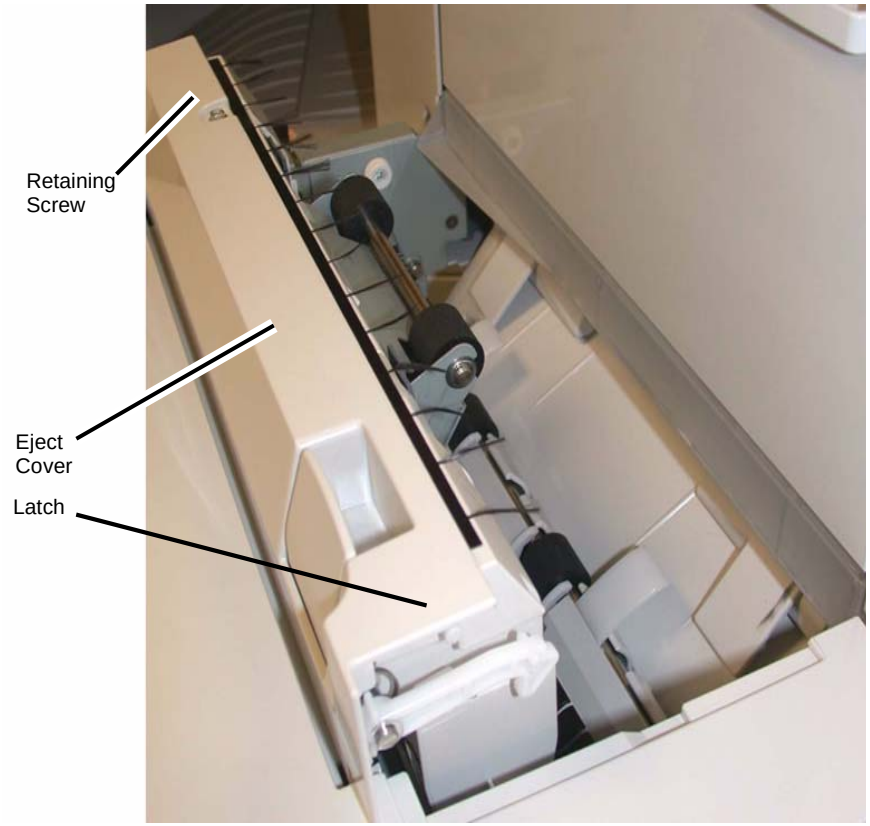

Figure 1 Removing the Eject Cover

Replacement

1. Align the Eject Cover with the Pins (2) on both sides, and slide it to the right (Figure 2).

NOTE: *The left side of the Cover is now captured by the Pins and cannot be lifted up.*

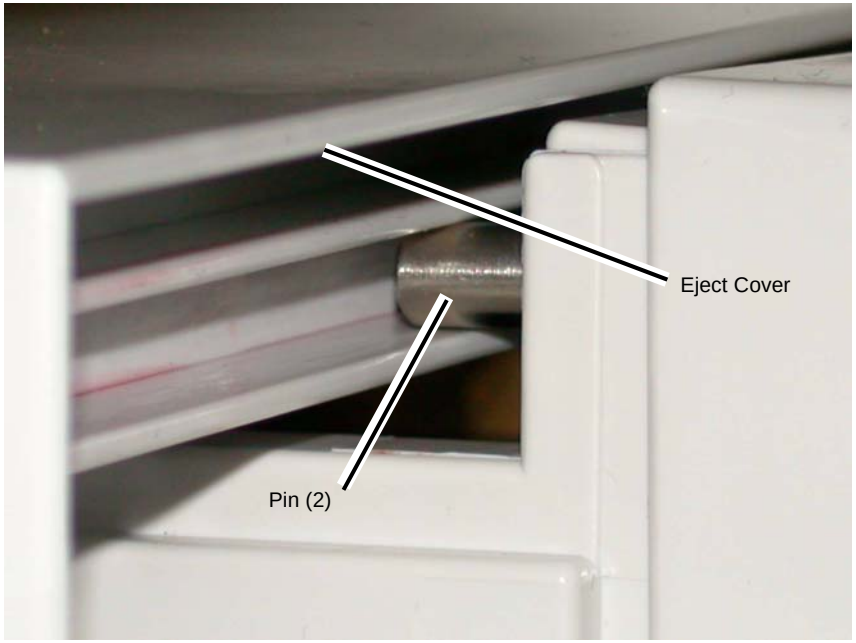

Figure 2 Aligning the Eject Cover

2. Position the Eject Cover so that the Latch is inserted in the hole (Figure 3).

NOTE: *The Latch must be outside the hole.*

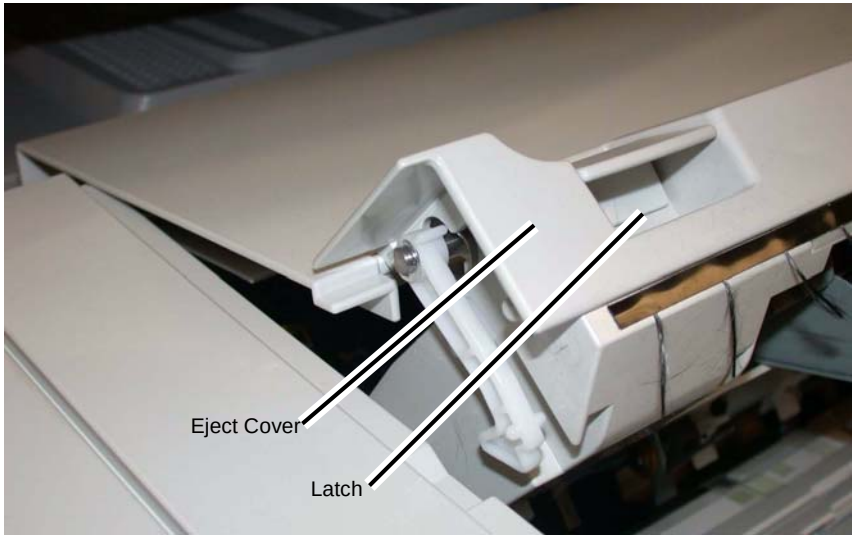

Figure 3 Inserting the Latch through the hole in the Cover

3. Place the Latch Spring in the position shown (Figure 4).

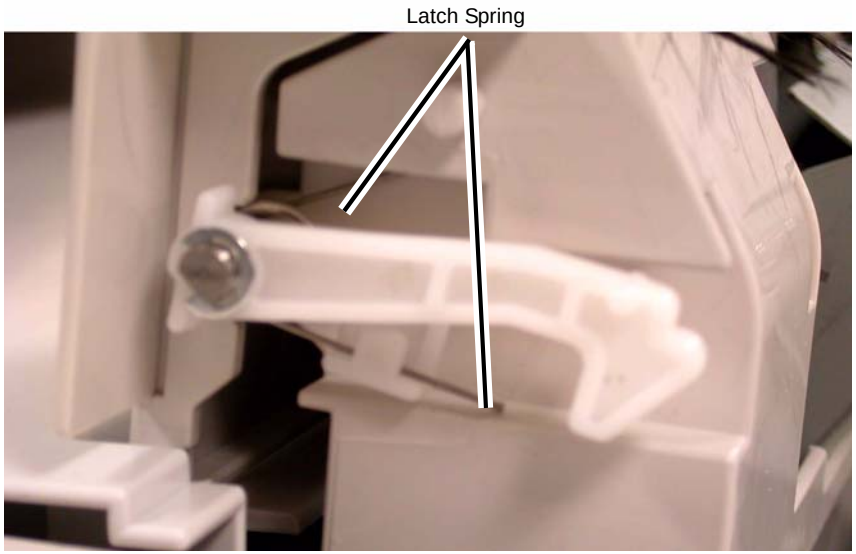

Figure 4 Positioning the Latch Spring

4. Make sure the Latch Hook and Latch Pin are positioned as shown (Figure 5).

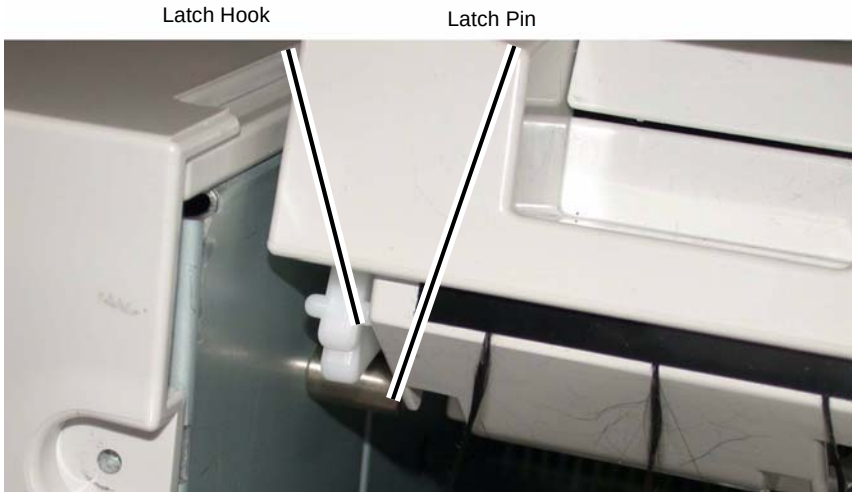

Figure 5 Positioning the Latch Hook and Latch Pin

5. Install the Retaining Screw (1) (Figure 6).

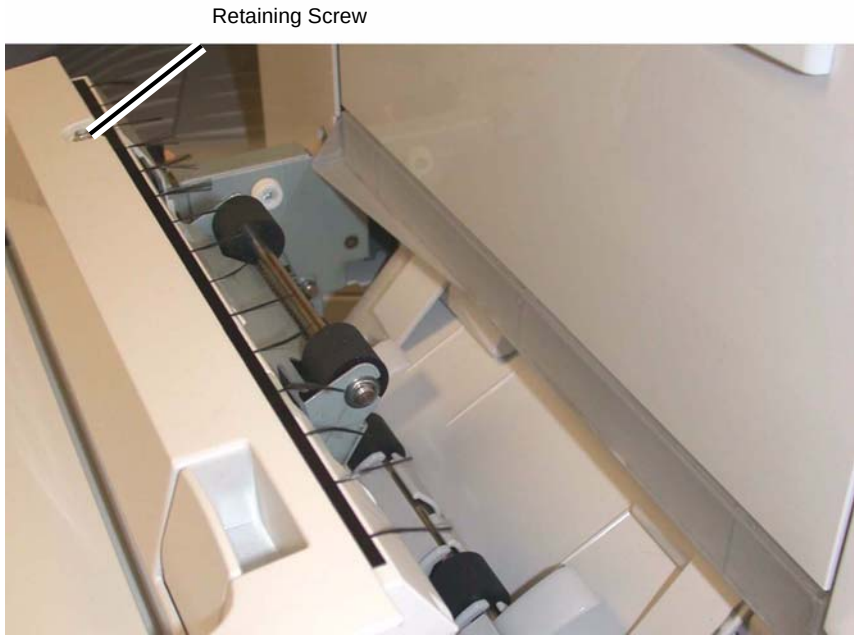

Figure 6 Installing the Retaining Screw

REP 13.10 Foot Cover (Office Finisher LX)

Parts List on PL 23.6

Removal

1. Switch off the power and disconnect the power cord.
2. Remove the Screw (1) (Figure 1).
3. Remove the Foot Cover.

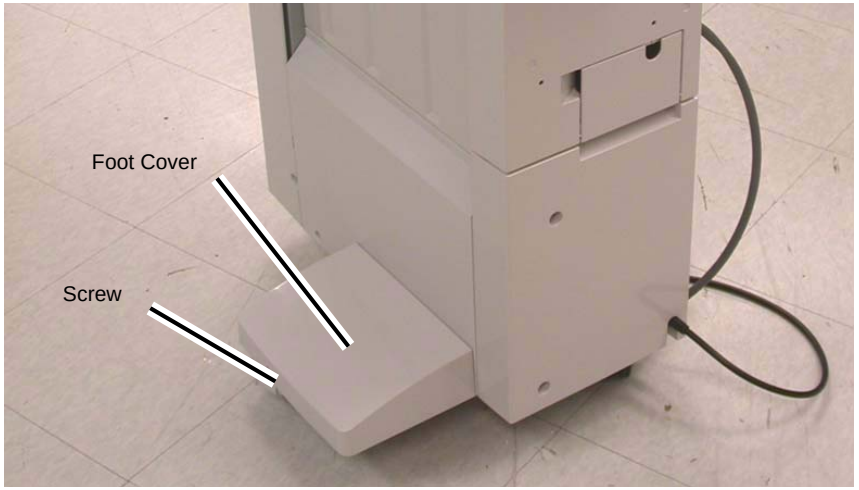

Figure 1 Removing the Foot Cover

Replacement

1. Reverse the removal procedure for replacement.

REP 13.11 Stacker Lower Cover (Office Finisher LX)

Parts List on PL 23.6

Removal

1. Switch off the power and disconnect the power cord.
2. Remove the Foot Cover (REP 13.10).
3. Remove the Screws (2) (Figure 1).
4. Remove the Stacker Lower Cover.

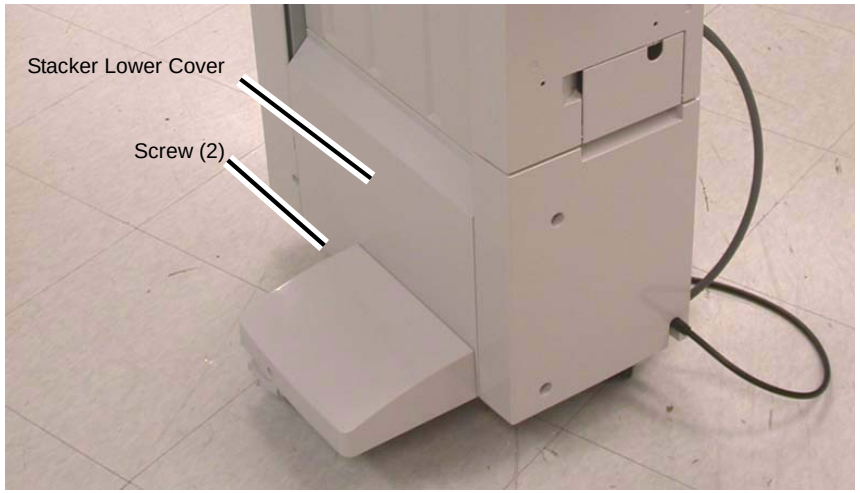

Figure 1 Removing the Stacker Lower Cover

Replacement

1. Reverse the removal procedure for replacement.

REP 13.12 Stacker Upper Cover (Office Finisher LX)

Parts List on PL 23.7

Removal

1. Switch off the power and disconnect the power cord.
2. Remove the Stacker Tray (REP 13.20).
3. Remove the Stacker Lower Cover (REP 13.11).
4. Remove the Screws (6) (Figure 1).
5. Remove the Stacker Upper Cover.

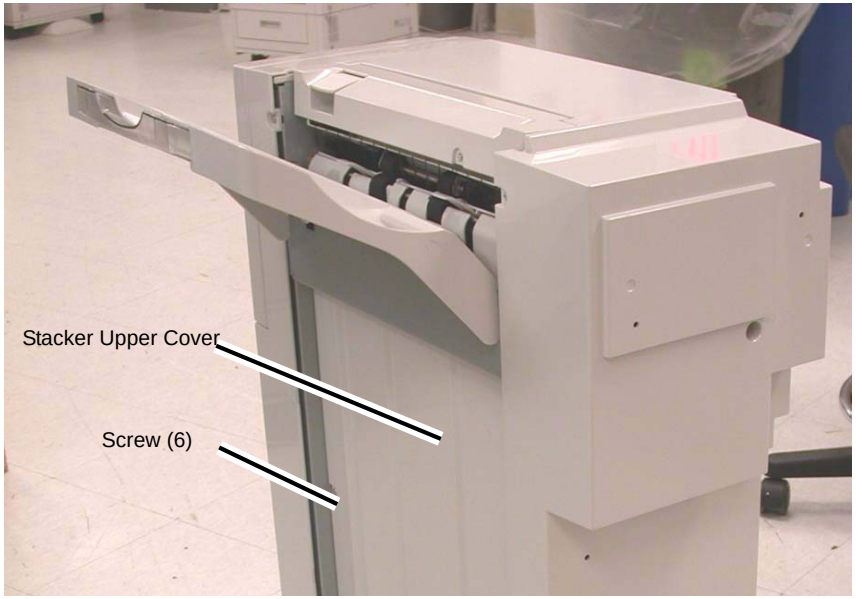

Figure 1 Removing the Stacker Upper Cover

Replacement

1. Reverse the removal procedure for replacement.

REP 13.13 Stack Height Sensors 1 and 2 (Office Finisher LX)

Parts List on PL 23.11

Removal

1. Switch off the power and disconnect the power cord.
2. Remove the Rear Upper Cover (REP 13.7).
3. Remove the Stack Height Sensor 1 or 2 (Figure 1).
   (1) Disconnect the connector.
   (2) Remove the Sensor.

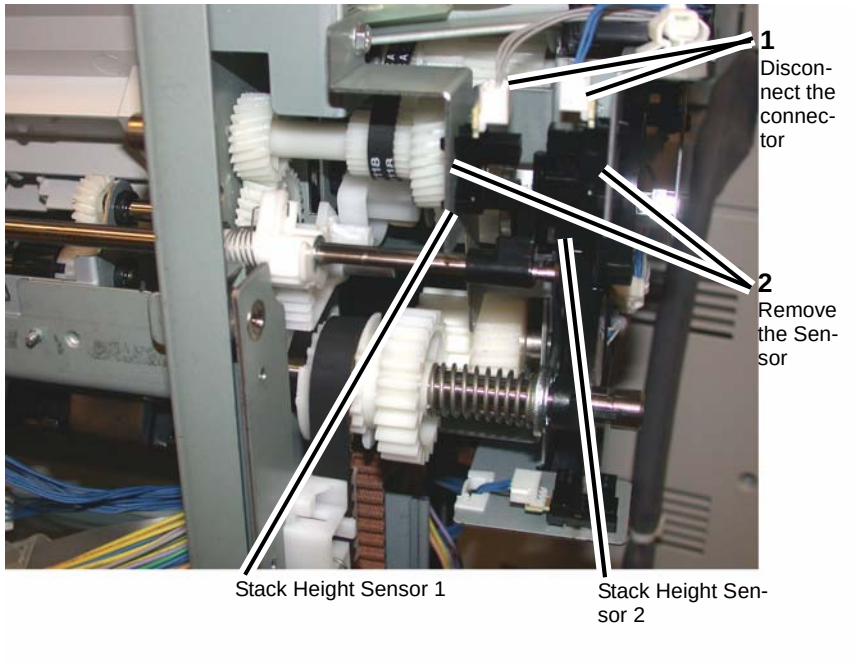

Figure 1 Removing the Stack Height Sensor 1 or 2

REP 13.14 Sub Paddle Solenoid Assembly (Office Finisher LX)

Parts List on PL 23.10

Removal

1. Switch off the power and disconnect the power cord.
2. Remove the Eject Cover (REP 13.9).
3. Remove the Sub Paddle Solenoid Assembly (Figure 1).
   (1) Disconnect the connector.
   (2) Remove the wires from the wire clamps
   (3) Remove the screw (1) from the Sub Paddle Solenoid Assembly.
   (4) Remove the Sub Paddle Solenoid Assembly.

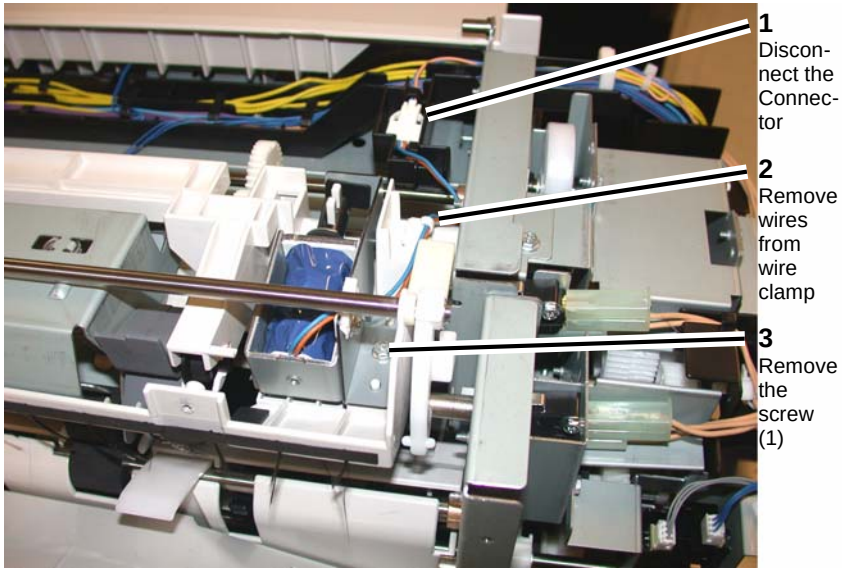

Figure 1 Removing the Sub Paddle Solenoid Assembly

REP 13.15 Stapler Motor (Office Finisher LX)

Parts List on PL 23.8

Removal

1. Switch off the power and disconnect the power cord.
2. Remove the Finisher Stapler Assembly (REP 13.16).
3. Remove the Screws (2) (Figure 1).

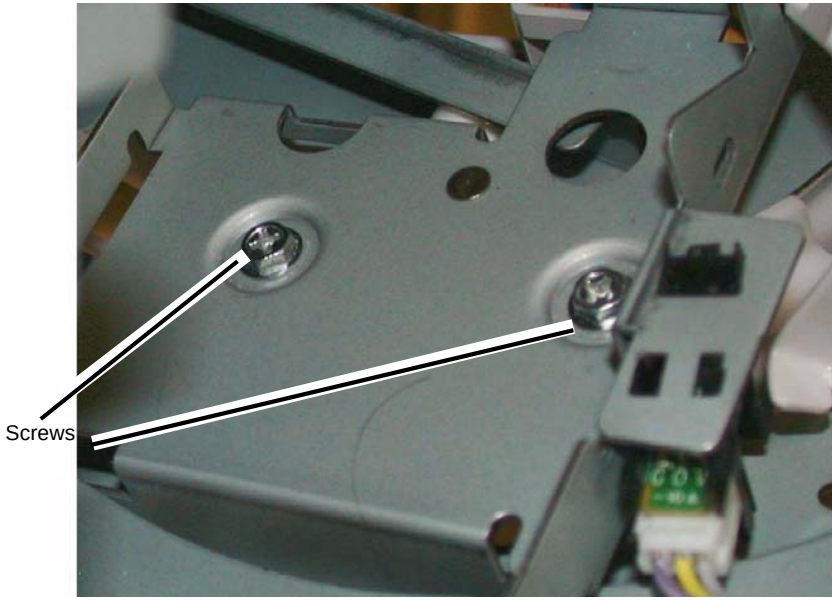

Figure 1 Removing the Screws

4. Remove the Wire Guide (Figure 2).
   (1) Pull out the Cable Clamps (3), and remove the wires from the Wire Guide.
   (2) Remove the Screws (2).
   (3) Remove the Wire Guide.

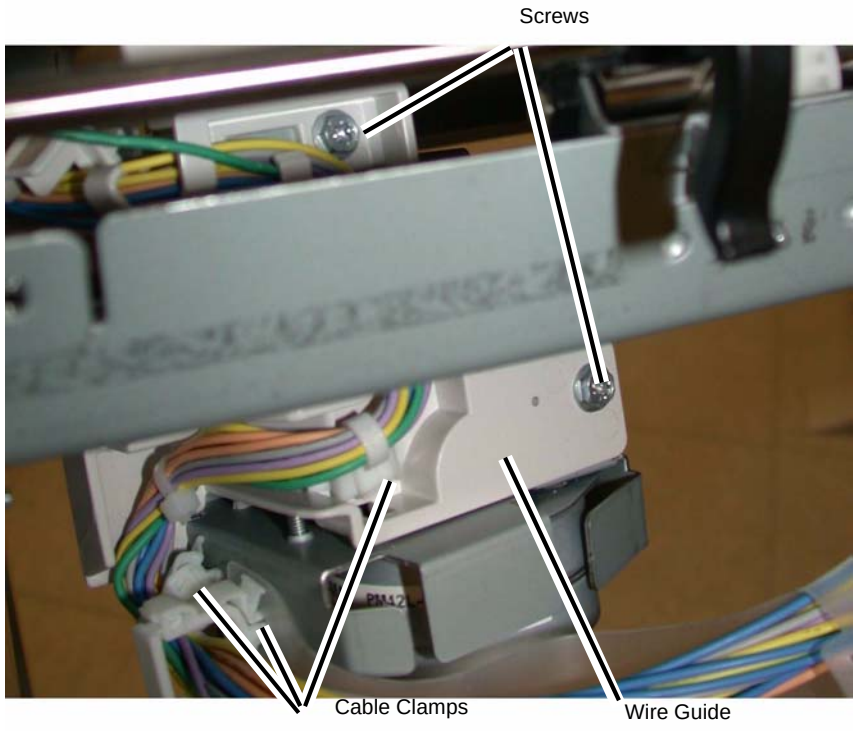

Figure 2 Removing the Wire Guide

5. Remove the Stapler Motor (Figure 3).
   (1) Remove the wires from the Cable Clamp.
   (2) Disconnect the Connector.
   (3) Remove the Screws (2).
   (4) Remove the Stapler Motor.

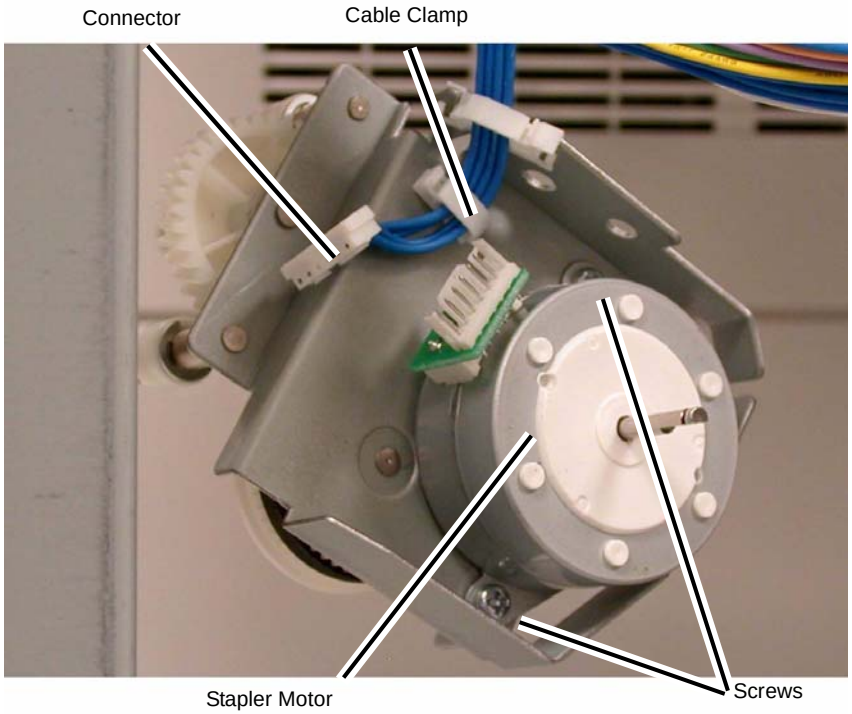

Figure 3 Removing the Stapler Motor

Replacement

1. Reverse the removal procedure for replacement.

REP 13.16 Finisher Stapler Assembly (Office Finisher LX)

Parts List on PL 23.8

Removal

1. Switch off the power and disconnect the power cord.
2. Remove the Creaser Knife Assembly (REP 13.18).
3. Remove the Front Cover Assembly (REP 13.6).
4. Remove the Stapler Cover (Figure 1).
   (1) Remove the Screw.
   (2) Remove the Stapler Cover.

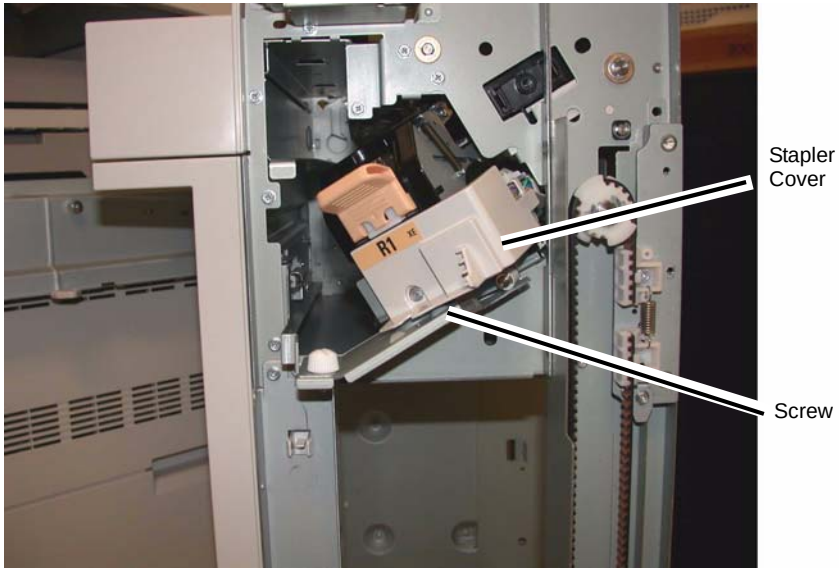

Figure 1 Removing the Stapler Cover

5. Remove the Finisher Stapler Assembly (Figure 2).
   (1) Disconnect the Connectors (2).
   (2) Remove the Screws (3).
   (3) Remove the Finisher Stapler Assembly.

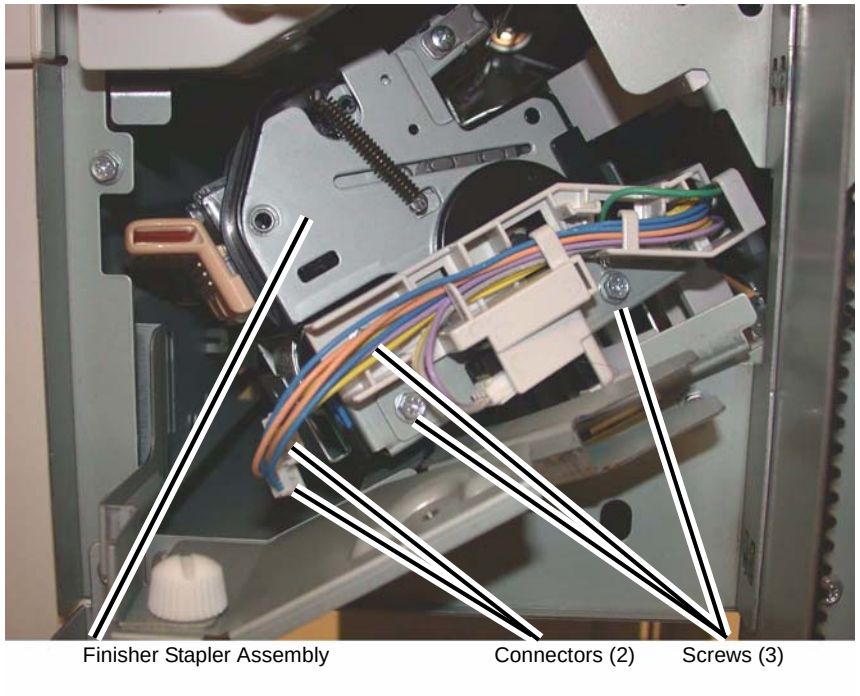

Figure 2 Removing the Finisher Stapler Assembly

Replacement

Reverse the removal procedure for replacement.

Perform ADJ 12.2 Finisher LX Booklet Crease/Staple Position

REP 13.17 Compiler Tray Assembly (Office Finisher LX)

Parts List on PL 23.12

Removal

1. Switch off the power and disconnect the power cord.
2. Undock the Finisher (REP 13.5).
3. Remove the Front Cover (REP 13.6).
4. Remove the Rear Upper Cover (REP 13.7).
5. Remove the Foot Cover (REP 13.10).
6. Remove the Stacker Lower Cover (REP 13.11).
7. Remove the Stacker Tray (REP 13.20).
8. Remove the Stacker Upper Cover (REP 13.12).
9. Remove the Eject Cover (REP 13.9).
10. Preparing to remove the Eject Roller Shaft (Figure 1).

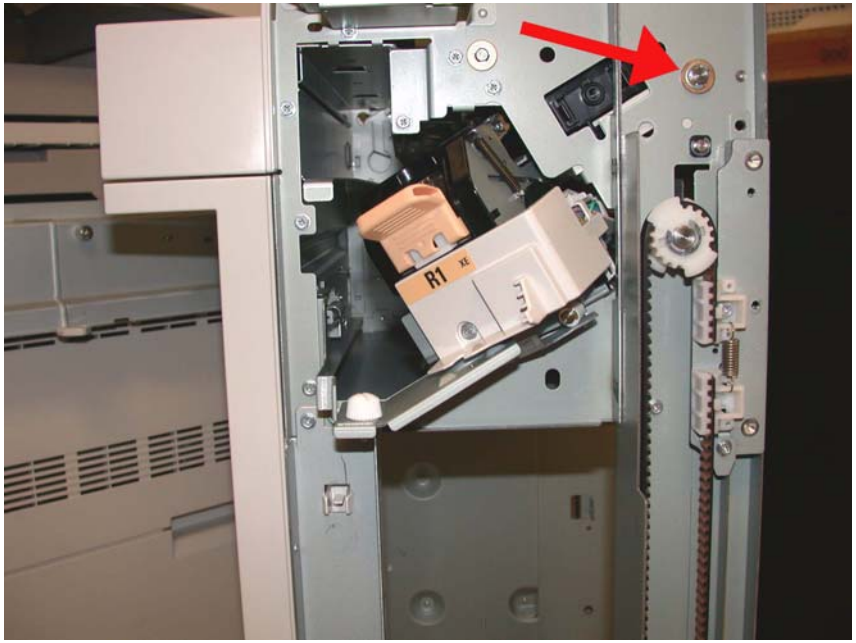

Figure 1 Removing the E-ring and brass bearing

11. Remove the Eject Roll Shaft (Figure 2).
    (1) Remove the E-ring and brass bearing from the front of the shaft.
    (2) Remove the E-ring,
    (3) Slide the Eject Roller shaft toward the front.
    (4) Remove the Gear, and brass bushing.
    (5) Remove the Eject Roll from the Finisher.

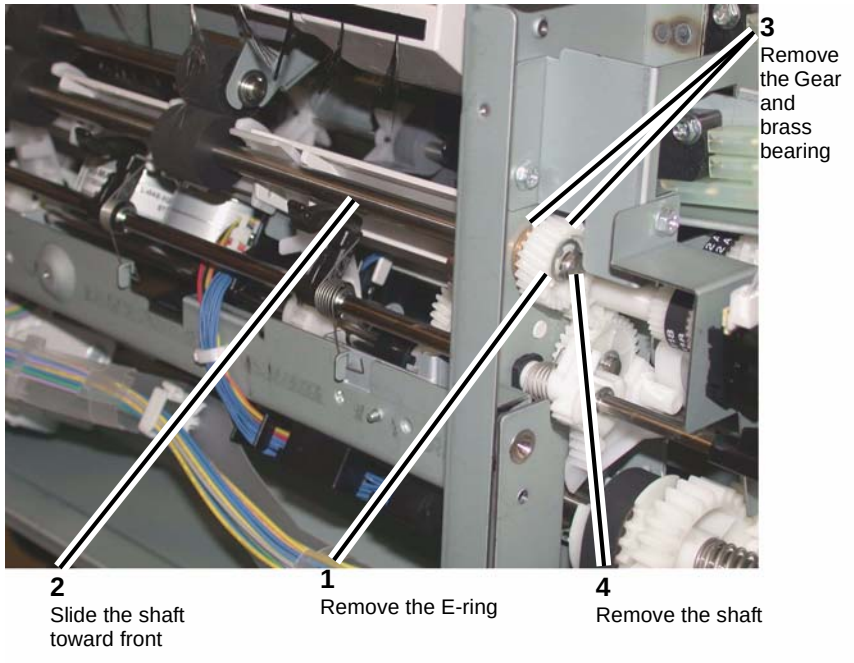

Figure 2 Removing the Eject Roll Shaft

12. Remove the Compiler Tray screw (Figure 3).

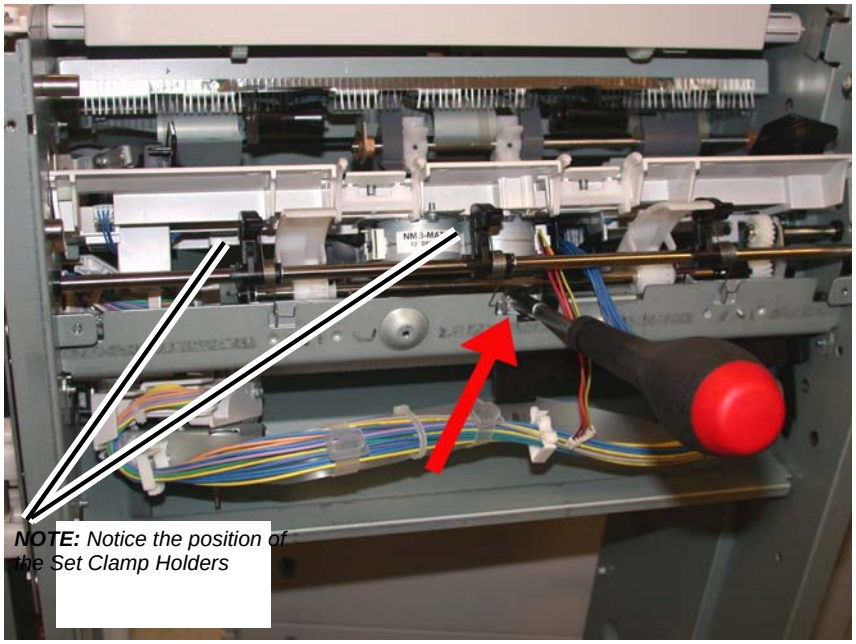

Figure 3 Removing the Compiler Tray screw

NOTE: *Notice the position and orientation of the Set Clamp Holders.*

13. Disconnect the springs from the Set Clamp Holders (3) (Figure 4).

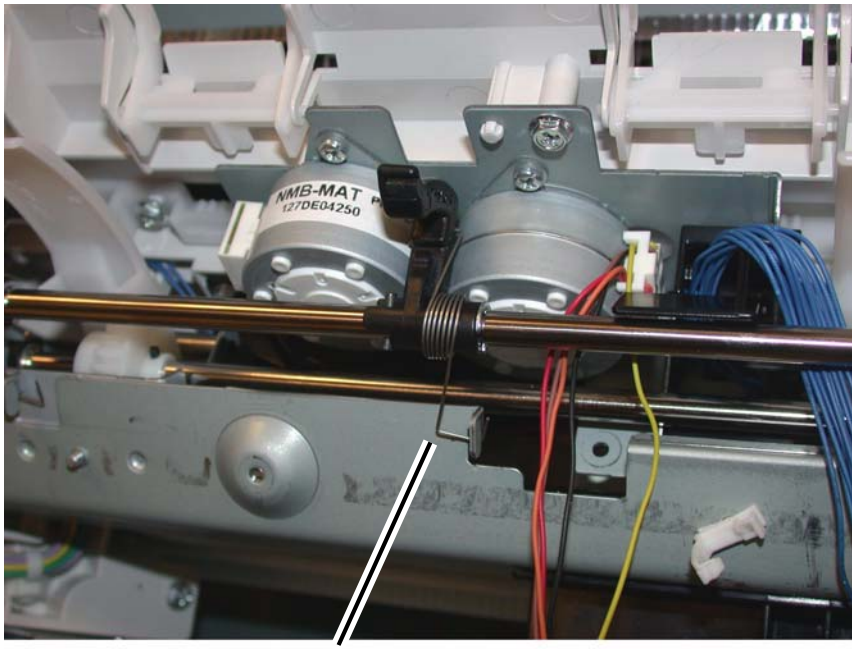

Figure 4 Disconnecting the Set Clamp Holder Springs

14. Remove the front E-ring and the bushing from the Set Clamp Shaft Assembly (Figure 5).

Figure 5 Removing the front E-ring from the Set Clamp Shaft

NOTE: *Notice the position and orientation of the Set Clamp Shaft gear and the cam gear that it engages. When installing the Set Clamp Shaft these gears must engage in the same manner (Figure 6).*

15. Remove the rear E-ring from the Set Clamp Shaft (Figure 7).

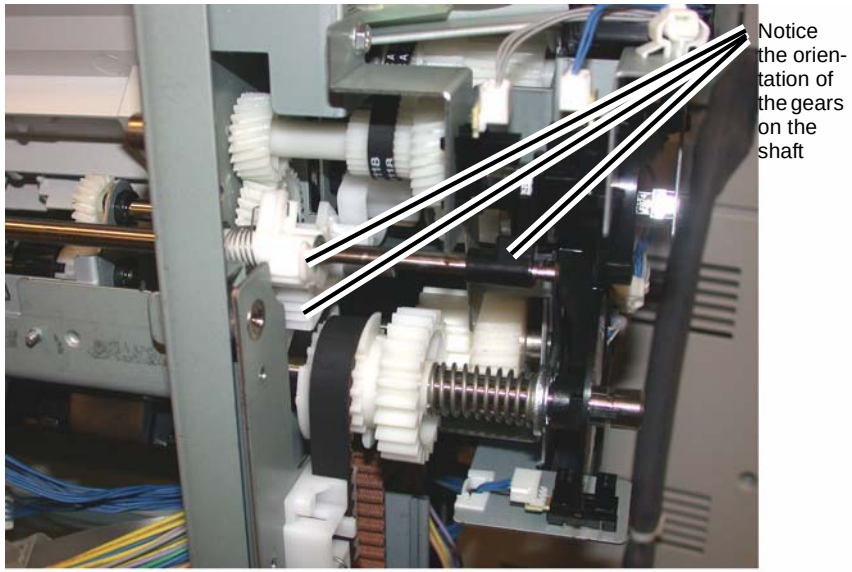

Figure 6 Set Clamp Shaft gear orientation

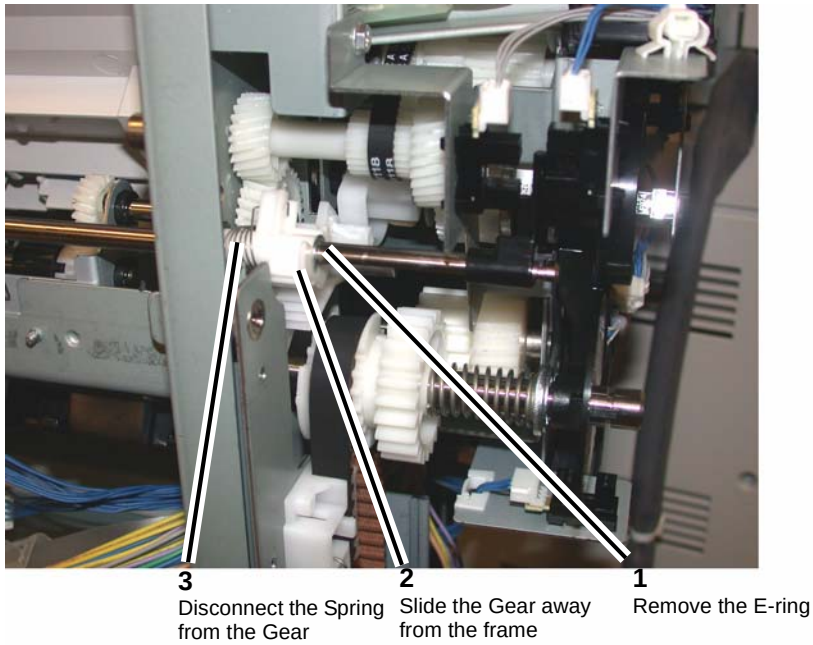

Figure 7 Preparing to remove the Set Clamp Shaft

16. Slide the Gear, Spring and the Bushing away from the frame (Figure 8).

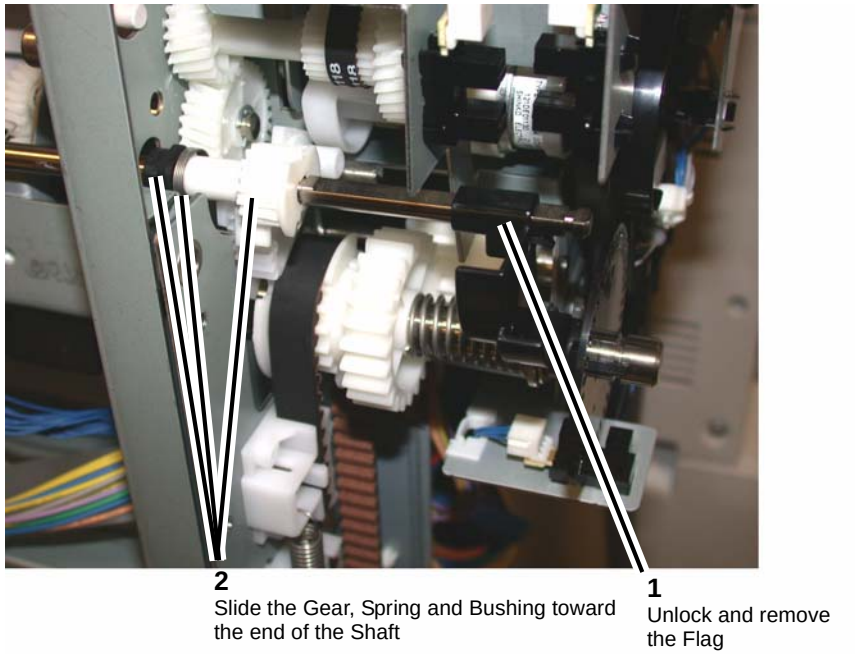

Figure 8 Preparing to remove the Set Clamp Shaft

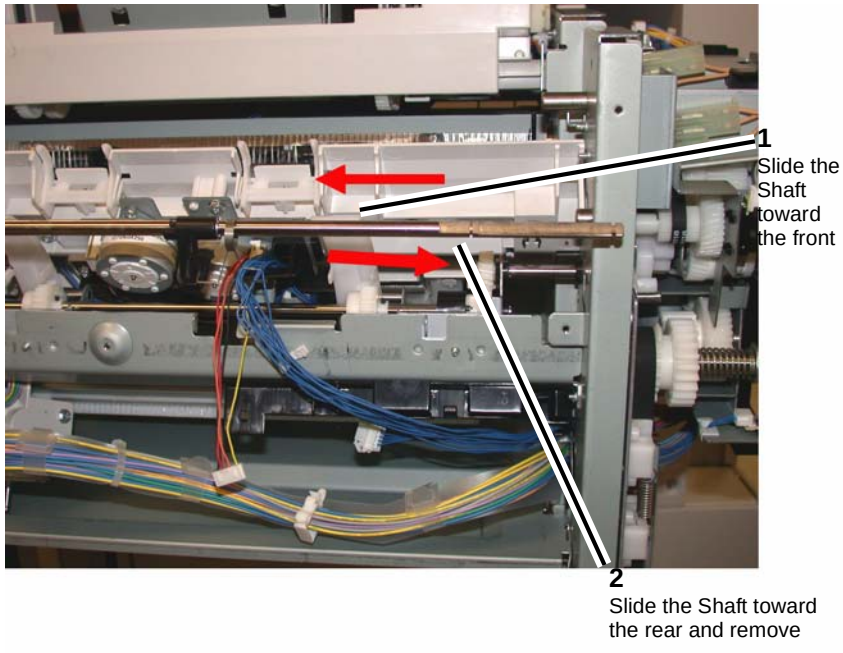

Figure 9 Removing the Set Clamp Shaft

17. Slide the Set Clamp Shaft to the front to clear the rear frame then slide the Shaft to the rear and remove it from the Finisher (Figure 9).

18. Remove the Compiler Tray Assembly (Figure 10).

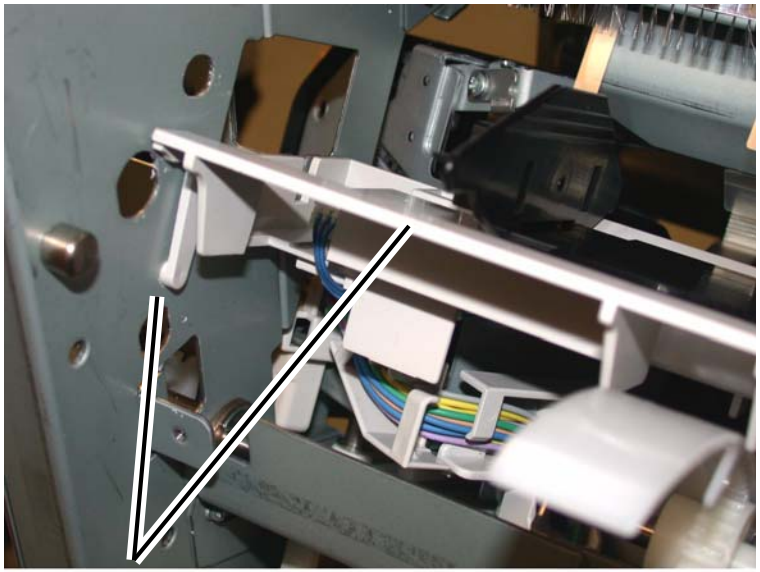

Figure 10 Remove the Compiler Tray Assembly

19. Usually this level of Compiler Tray Assembly removal is for the purpose of removing the Front or Rear Tamper Motors, or the Front or Rear Tamper Home Sensors or the Compiler Tray No Paper Sensor.

    However if the Compiler Tray Assembly must be completely removed from the Finisher, it will be necessary to disconnect all of the wire harness connectors to the Tamper Motors, Tamper Home Sensors and No Paper Sensor and disconnect the wires from all wire harness guides.

Replacement

1. Route the wire harness through the wire guides and connect the proper connectors to the No Paper Sensor, the Tamper Home Sensors and the Tamper Motors.
2. Place the Compiler Tray Assembly into position.
3. Install the Set Clamp Shaft front end into the front frame (Figure 11).
4. Slide the Shaft toward the front until the rear end of the Shaft can be inserted into the rear frame (Figure 11).

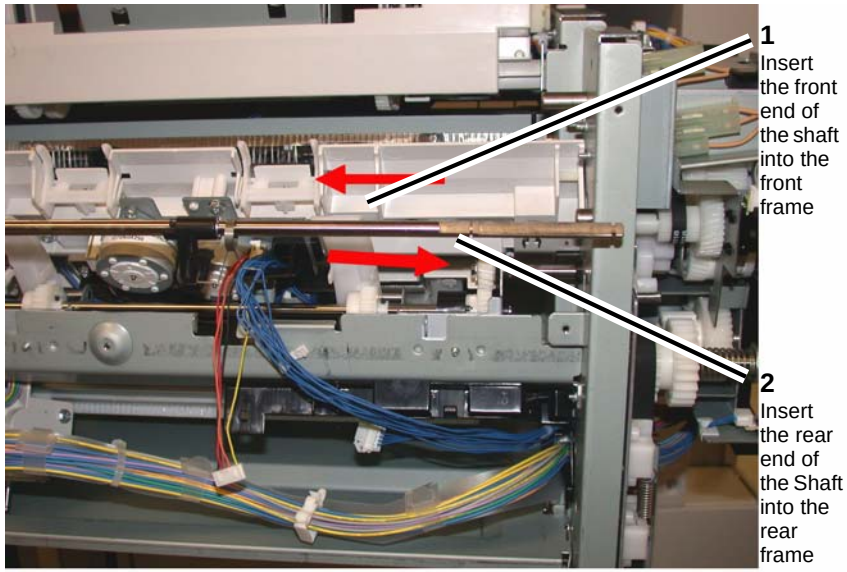

Figure 11 Installing the Set Clamp Shaft into position

5. Slide the 3 Set Clamp Holders with Springs into the correct location on the Shaft (Figure 12).

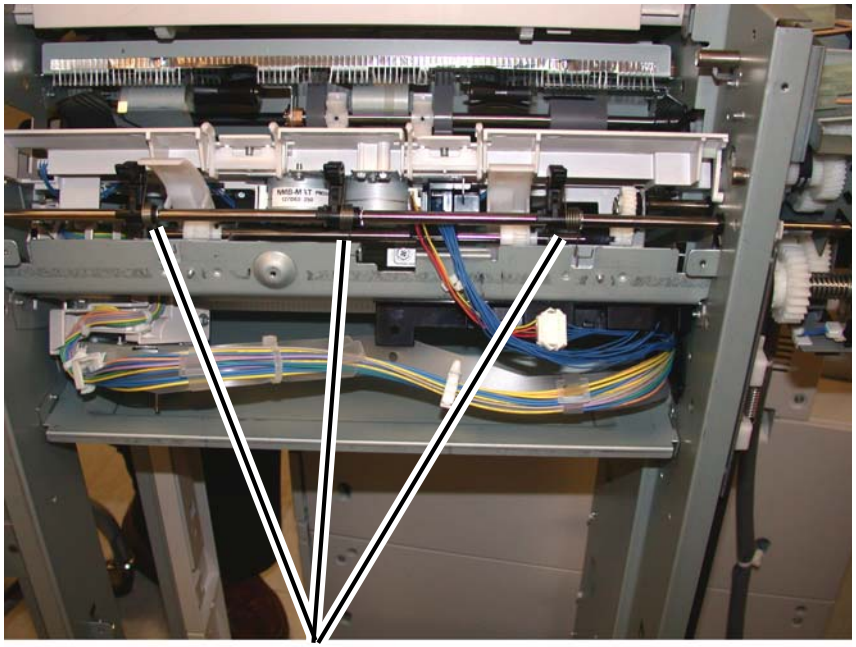

Holders and Springs in correct location on the Shaft

Figure 12 Preparing to install the Holder Springs

6. Install the Bushing, Spring and Gear onto the rear end of the Set Clamp Shaft (Figure 13).

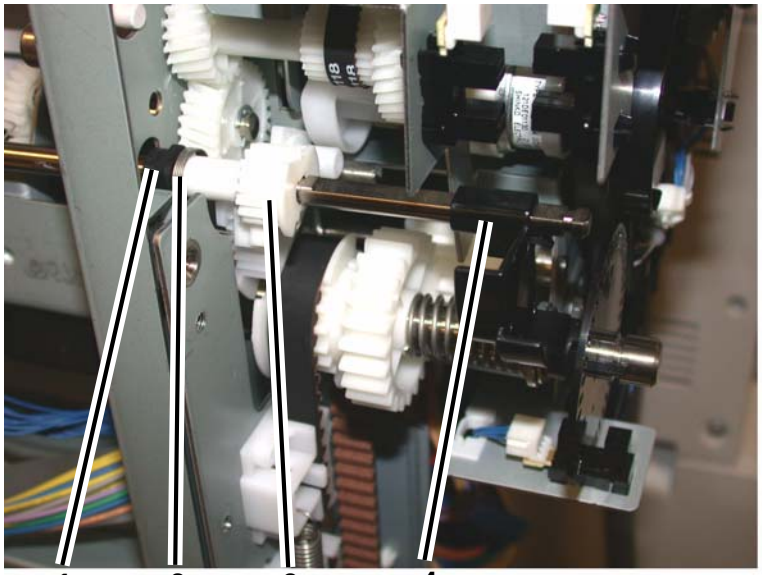

1 Bearing
2 Spring
3 Gear
4 Install the Stack Height Sensor Flag onto the rear end of the Shaft as shown

Figure 13 Installing the Bushing, Spring and Gear

7. Rotate the Set Clamp Shaft until the Stack Height Sensor Flag is in the correct position then position the 2 gears into the configuration (Figure 14).

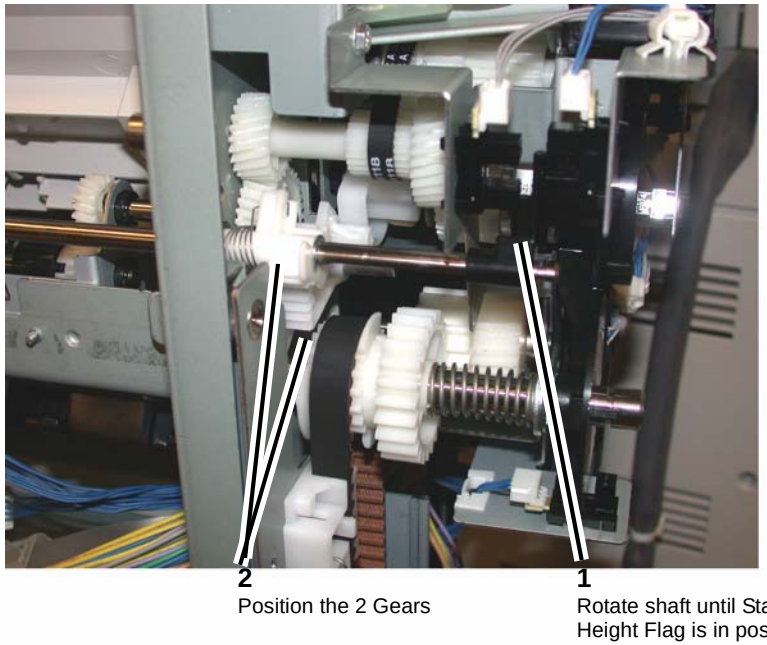

Figure 14 Aligning the Gears and Stack Height Sensor Flag

8. Attach the Spring to the gear and slide the Gear into position.
9. Ensure that the 2 Gears and Stack Height Sensor Flag is in the position shown (Figure 15) and install the E-ring.

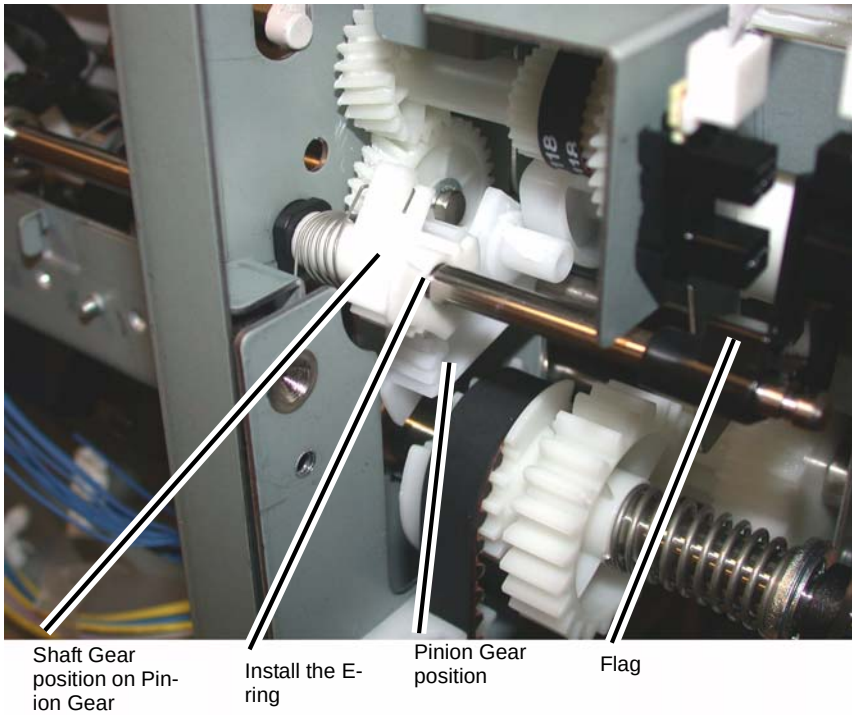

Figure 15 Orientation of 2 Gears and Stack Height Sensor Flag

10. Install the Bushing onto the front end of the Set Clamp Shaft and install the E-ring (Figure 16).

Figure 16 Installing the Bushing and E-ring

11. Ensure that the Set Clamp Holder Springs are connected (Figure 17).

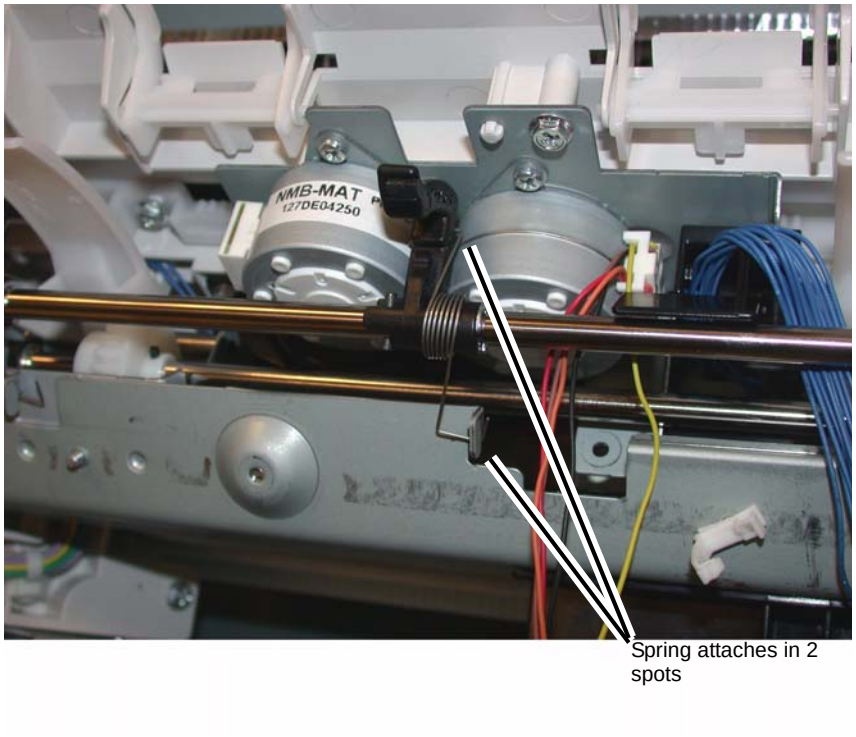

Figure 17 Attaching the Set Clamp Holder Springs

12. Install the Eject Roll Shaft.
    (1) Place the Eject Roll Shaft into position in the front and rear frame (Figure 18).

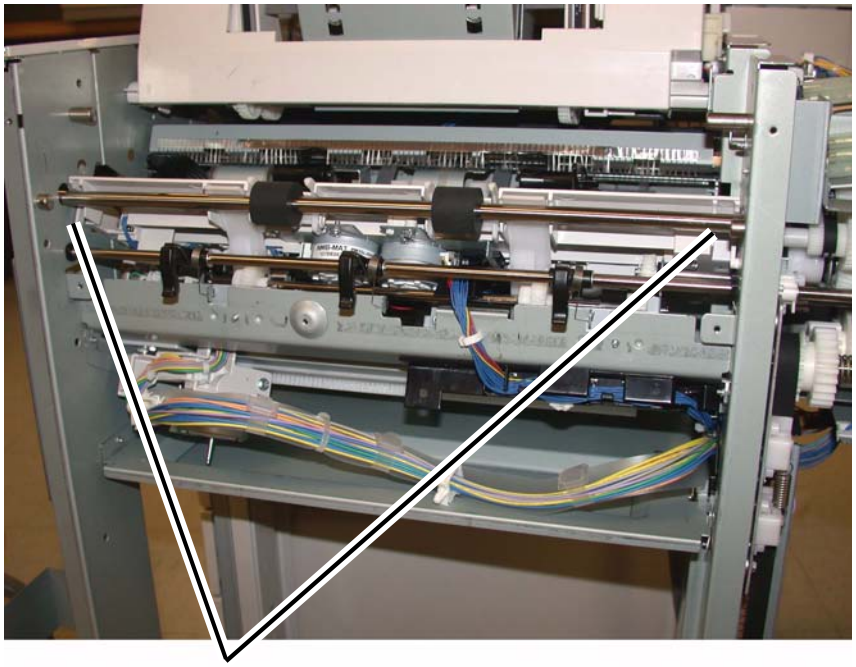

Figure 18 Preparing to install the Eject Roll Shaft

(2) Install the brass bearing, the Gear and the E-ring onto the rear of the Eject Roll Shaft (Figure 19).

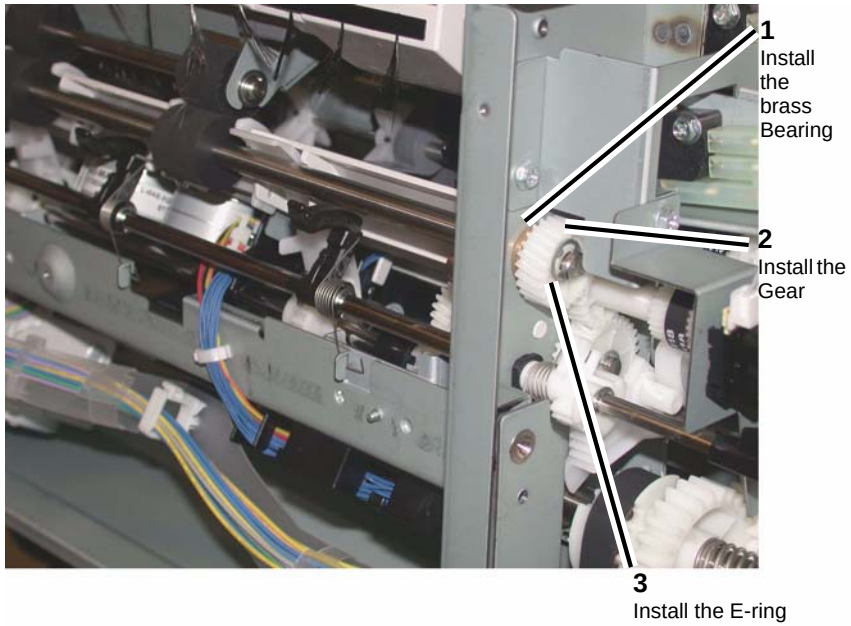

Figure 19 Installing the Eject Roll Shaft rear parts

(3) Install the brass bearing and E-ring onto the front of the Eject Roll Shaft (Figure 20).

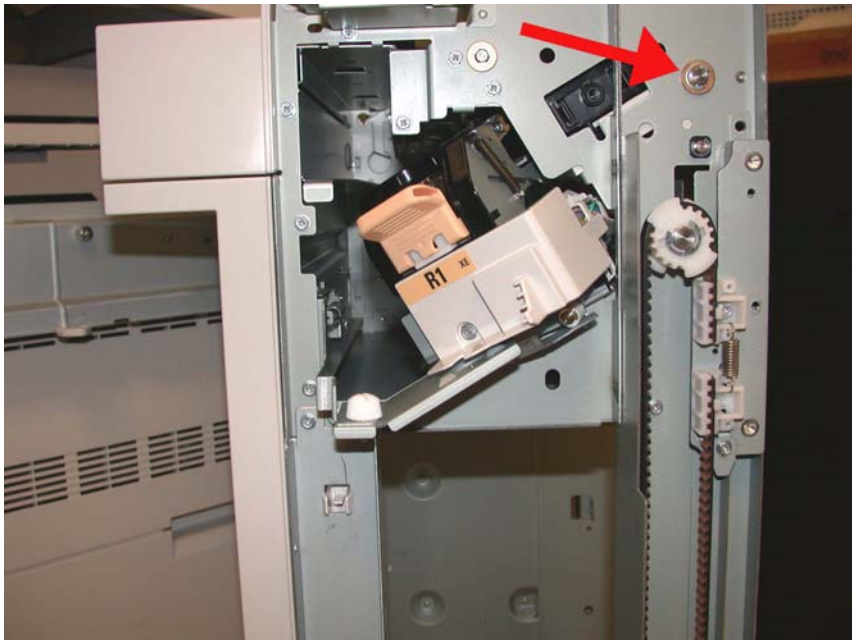

Figure 20 Installing the brass bearing and E-ring

13. Install the Compiler Tray screw (1).
14. Install the Eject Cover (REP 13.9).
15. Install the Stacker Upper Cover (REP 13.12).
16. Install the Stacker Tray (REP 13.20).
17. Install the Stacker Lower Cover (REP 13.11).
18. Install the Foot Cover (REP 13.10).
19. Install the Rear Upper Cover (REP 13.7).
20. Install the Front Cover (REP 13.6).
21. Dock the Finisher to the IOT (REP 13.5).

REP 13.18 Crease Assembly (Office Finisher LX)

Parts List on PL 23.14

Removal

1. Switch off the power and disconnect the power cord.
2. Remove the Crease Assembly (Figure 1).
   (1) Open the Finisher Front Door.
   (2) Remove the Guard.

   NOTE: *Pull out the Cable Tie to obtain additional slack in the wires.*

   (3) Disconnect the Cable.
   (4) Remove the Thumbscrew.
   (5) Pull the Crease Assembly straight out.

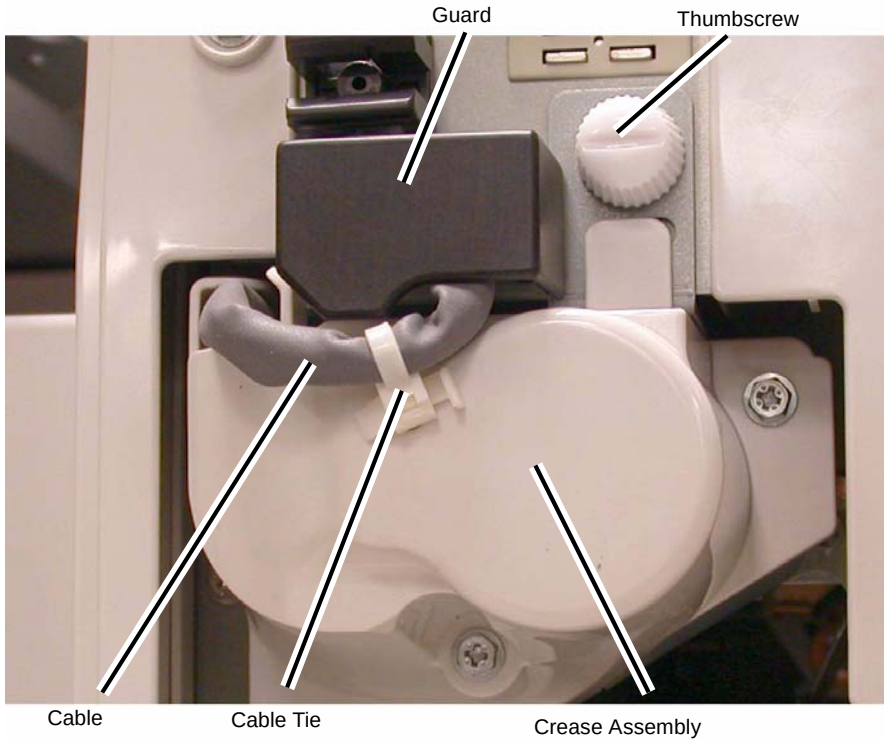

Figure 1 Removing the Crease Assembly

Replacement

NOTE: *Make sure the Locating Pins (2) are properly engaged (Figure 2).*

1. Reverse the removal procedure for replacement.

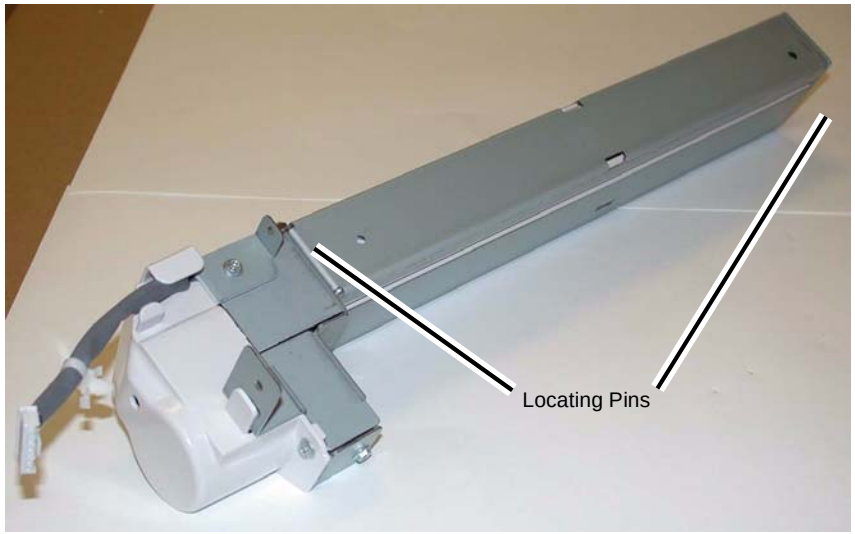

Figure 2 Crease Assembly

2. Perform ADJ 12.2 Finisher LX Booklet Crease/Staple Position

REP 13.19 Stacker Elevator Motor (Office Finisher LX)

Parts List on PL 23.7

Removal

1. Switch off the power and disconnect the power cord.
2. Remove the Finisher Rear Upper Cover (REP 13.7).
3. Disconnect P/J8988 on the Finisher Control PWB.
4. Release the wires from the cable clamps.
5. Remove the wires from the wire guide, remove the screws (2) and move the wire guide to one side.
6. Remove the screws (2) from the motor mount using a 5.5 mm combination wrench.
7. Remove the Stacker Elevator Motor.

Replacement

Install in reverse order of removal procedure.

REP 13.20 Stacker Tray (Office Finisher LX)

Parts List on PL 23.7

Removal

1. Switch off the power and disconnect the power cord.
2. Remove the following:
   (1) Booklet Maker Assembly (if installed) (REP 13.31).
   (2) Front Cover Assembly (REP 13.6).
   (3) Rear Upper Cover (REP 13.7).
3. Remove the Stacker Tray (Figure 1).
   (1) Remove the Screws (4).
   (2) Remove the Stacker Tray.

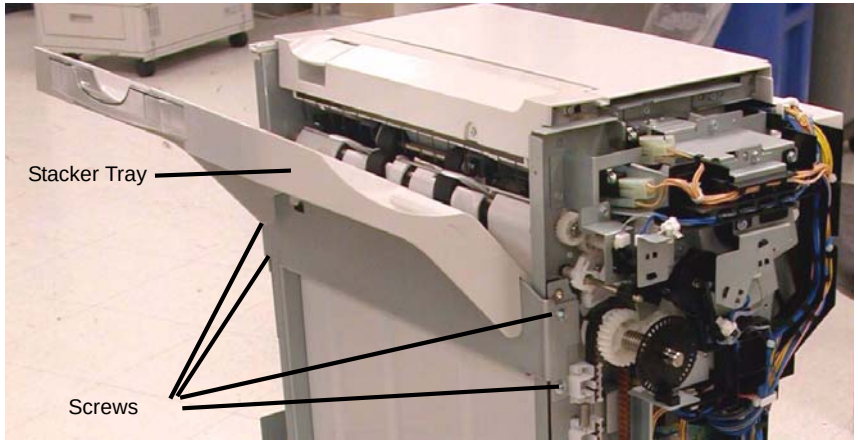

Figure 1 Removing the Stacker Tray

Replacement

Reverse the removal procedure for replacement.

REP 13.21 Eject Belt (Office Finisher LX)

Parts List on PL 23.13

Removal

1. Switch off the power and disconnect the power cord.
2. Undock the Finisher (REP 13.5).
3. Remove the Booklet Maker (REP 13.31).
4. Remove the Rear upper Cover (REP 13.7).
5. Remove the Eject Motor Assembly (REP 13.22).
6. Remove the Eject Motor (REP 13.25).
7. Remove the Eject Belt.

Replacement

1. To install, carry out the removal steps in reverse order.

REP 13.22 Eject Motor Assembly (Office Finisher LX)

Parts List on PL 23.11

Removal

1. Switch off the power and disconnect the power cord.
2. Undock the Finisher (REP 13.5).
3. Remove the Booklet Maker (REP 13.31).
4. Remove the Rear Upper Cover (REP 13.7).
5. Preparing to remove the Eject Motor Assembly.
   (1) Disconnect the Eject Motor connector
   (2) Remove the wire harness from the Harness Guide
   (3) Disconnect the wire harness clamps (2)
   (4) Remove the screws (2) from the Harness Guide and move the Harness Guide aside.
   (5) Disconnect the Spring
   (6) Remove the Eject Motor Assembly screws (4)
6. Remove the Eject Motor Assembly.

Replacement

1. To install, carry out the removal steps in reverse order.

REP 13.23 Finisher PWB (Office Finisher LX)

Parts List on PL 23.16

Removal

1. Switch off the power and disconnect the power cord.
2. Remove the Rear Upper Cover (REP 13.7).
3. Remove the Finisher PWB (Figure 1).
   (1) Disconnect the Connectors (9).
   (2) Remove the Screws (5).
   (3) Remove the Finisher PWB.

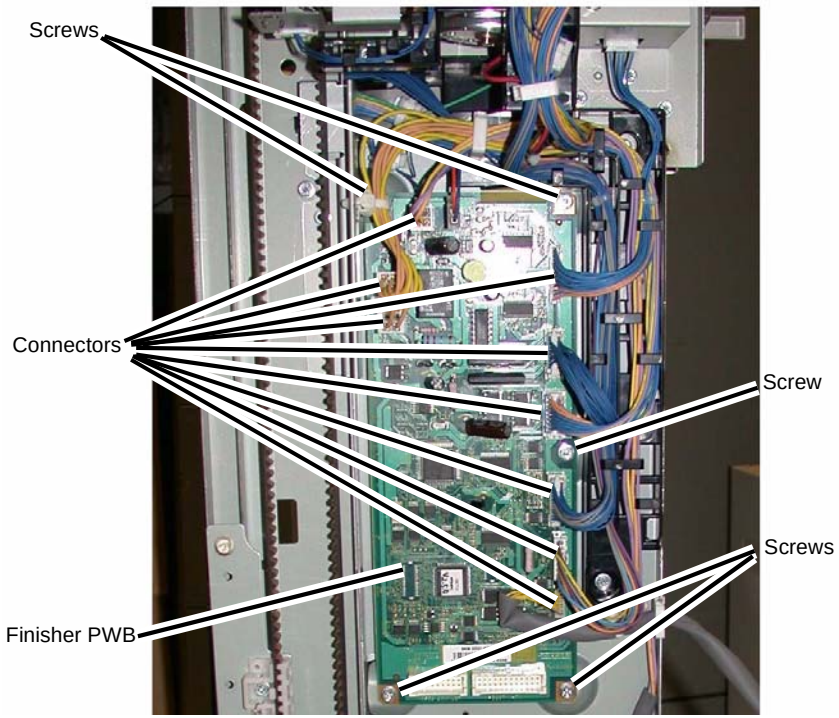

Figure 1 Removing the Finisher PWB

Replacement

1. Reverse the removal procedure for replacement.

REP 13.24 Finisher LVPS (Office Finisher LX)

Parts List on PL 23.16

Removal

1. Switch off the power and disconnect the power cord.
2. Remove the Rear Lower Cover (REP 13.8).
3. Remove the Finisher LVPS (Figure 1).
   (1) Disconnect the Connectors (2).
   (2) Remove the Screws (4).
   (3) Remove the Finisher LVPS.

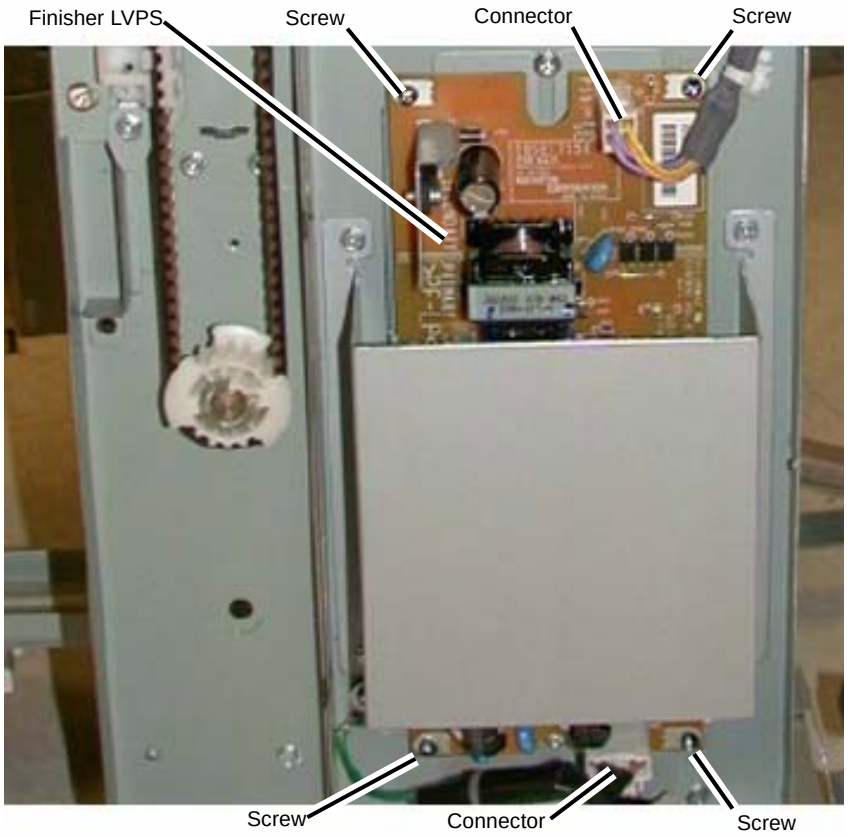

Figure 1 Removing the Finisher LVPS

Replacement

Reverse the removal procedure for replacement.

REP 13.25 Eject Motor (Office Finisher LX)

Parts List on PL 23.11

Removal

1. Switch off the power and disconnect the power cord.
2. Undock the Finisher (REP 13.5).
3. Remove the Booklet Maker (REP 13.31).
4. Remove the Rear Upper Cover (REP 13.7).
5. Remove the Eject Motor Assembly (REP 13.22).
6. Remove the Eject Motor.
   (1) Remove the screws (2)
   (2) Remove the Eject motor

Replacement

1. To install, carry out the removal steps in reverse order.

REP 13.26 Front/Rear Tamper Motor (Office Finisher LX)

Parts List on PL 23.12

Removal

1. Switch off the power and disconnect the power cord.
2. Remove the Compiler Tray (REP 13.17).
3. Turn the Compiler Tray over on a work surface.
4. Remove the Tamper Motor (Figure 1).
   (1) Release the wires from the wire guide.
   (2) Remove the screw (1) and remove the wire guide.
   (3) Disconnect the Tamper Motor connector.

   NOTE: *The Rear Tamper Motor connector has already been disconnected.*

   (4) Remove the screws (2).
   (5) Remove the Tamper Motor.

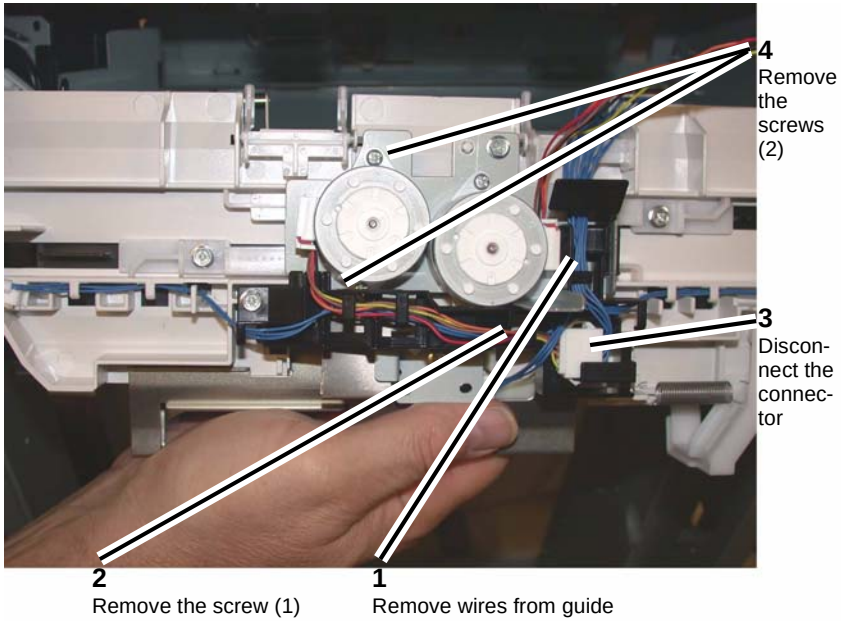

Figure 1 Removing the Tamper Motor

Replacement

Replace in reverse order of removal.

REP 13.27 Front/Rear Tamper Home Sensors (Office Finisher LX)

Parts List on PL 23.12

Removal

1. Switch off the power and disconnect the power cord.
2. Remove the Compiler Tray Assembly (REP 13.17).
3. Turn the Compiler Tray over on a work surface (Figure 1).
4. Disconnect the connector.
5. Remove the Front or Rear Tamper Home Sensor (PL 23.12).

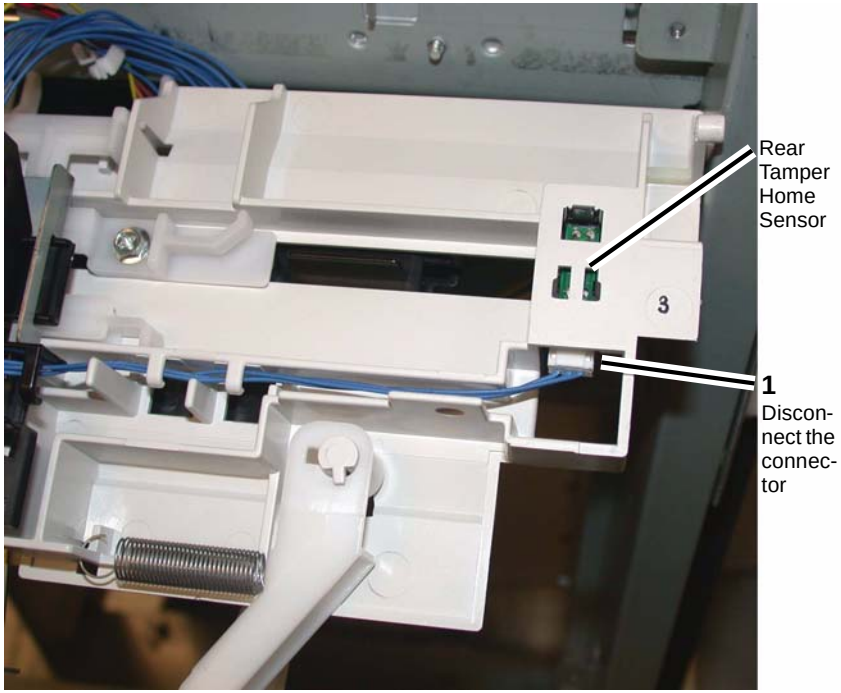

Figure 1 Removing the Front or Rear Tamper Home Sensor

REP 13.28 Compiler No Paper Sensor (Office Finisher LX)

Parts List on PL 23.12

Removal

1. Switch off the power and disconnect the power cord.
2. Remove the Compiler Tray Assembly (REP 13.17).
3. Turn the Compiler tray over on a work surface.
4. Remove the screw (1) that secures the bracket (PL 23.12) (Figure 1).

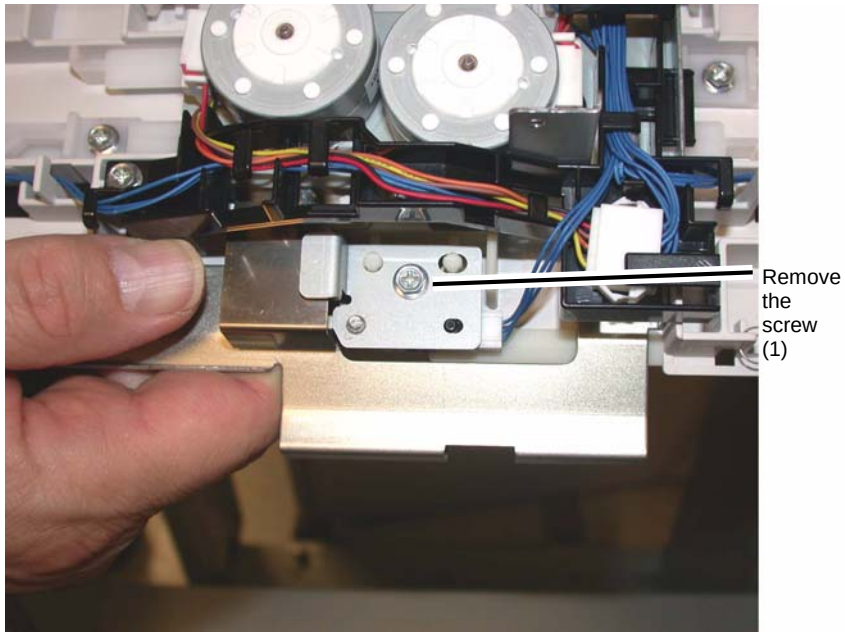

Figure 1 Removing the Bracket

5. Disconnect the connector (Figure 2).
6. Remove the screw (1) that secures the sensor.
7. Remove the Compiler No Paper Sensor.

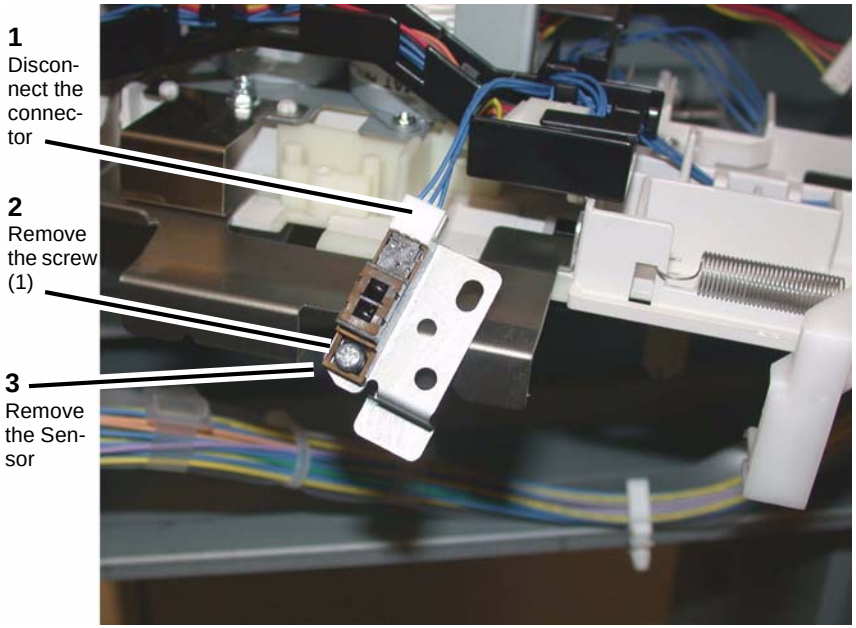

Figure 2 Removing the Compiler No Paper Sensor

REP 13.29 Front/Rear Carriage Assembly (Office Finisher LX)

Parts List on PL 23.7

Removal

NOTE: *Ensure that the Stacker Tray is in the top position.*

1. Switch off the power and disconnect the power cord.
2. Remove the Finisher Front Cover (REP 13.6).
3. Remove the Rear Upper and Rear Lower Covers (REP 13.7, REP 13.8).
4. Remove the Stacker Tray (REP 13.20).
5. Removing the Carriage Assembly (Figure 1).
   (1) Disconnect and remove the Spring.

NOTE: *The Carriage Bearings (2 each Assembly) are not fastened to the shafts. Use care to catch the Bearings when the Carriage Assembly is removed.*

   (2) With a 6 inch common screwdriver, move the belt Clamp latch aside and remove the Stacker Belt and Carriage Assembly.

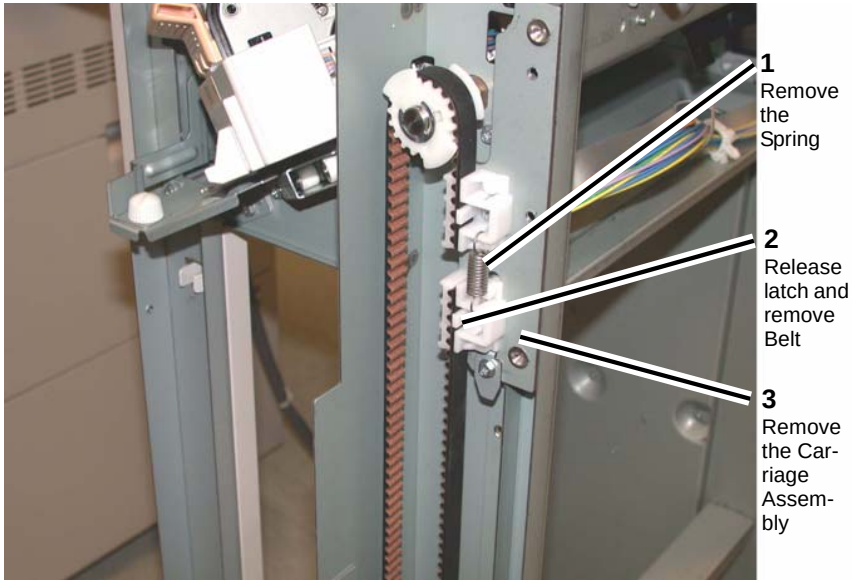

Figure 1 Removing the Carriage Assembly

Replacement

NOTE: *Ensure that the Front and Rear Carriage Assemblies are installed at the same height.*

1. Install the Front or Rear Carriage Assemblies in the reverse order of removal.

REP 13.30 Booklet PWB (Office Finisher LX)

Parts List on PL 23.21

Removal

1. Switch off the power and disconnect the power cord.
2. Remove the Booklet PWB Cover (REP 13.35).
3. Remove the Booklet PWB (Figure 1).
   (1) Disconnect the Connectors (5).
   (2) Remove the Screws (4).
   (3) Remove the Booklet PWB.

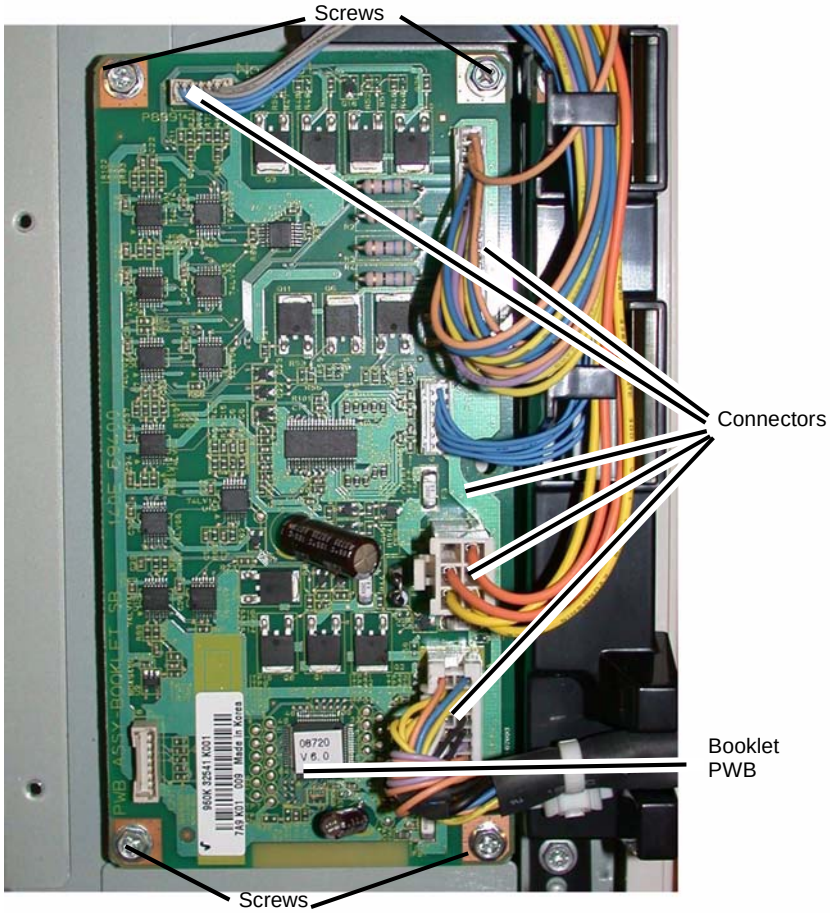

Figure 1 Removing the Booklet PWB

Replacement

1. Reverse the removal procedure for replacement.

REP 13.31 Booklet Maker Assembly (Office Finisher LX)

Parts List on PL 23.6

Removal

1. Switch off the power and disconnect the power cord.
2. Unlatch the Eject Cover, and move it all the way to the left (Figure 1).
3. Remove the Thumbscrews (2) (Figure 1).

Figure 1 Eject Cover and Thumbscrew

4. Disconnect the Booklet Maker Assembly from the Finisher.
   (1) Remove the Connector Cover (Figure 2).

Figure 2 Connector Cover

   (2) Disconnect the Connector (Figure 3).
   (3) Pull out the Cable Ties (4).

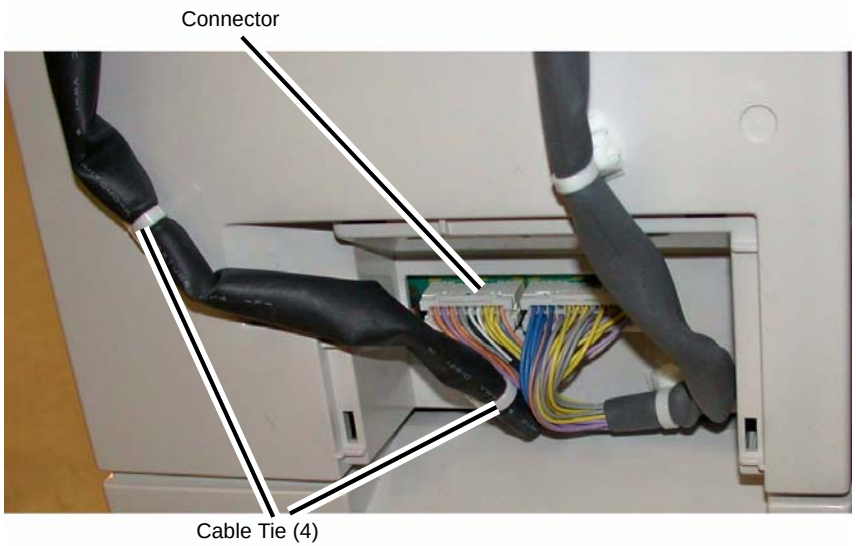

Figure 3 Disconnecting the Booklet Maker Assembly

5. Lift the Booklet Maker Assembly off the Locating Pins (4), and remove (Figure 4).

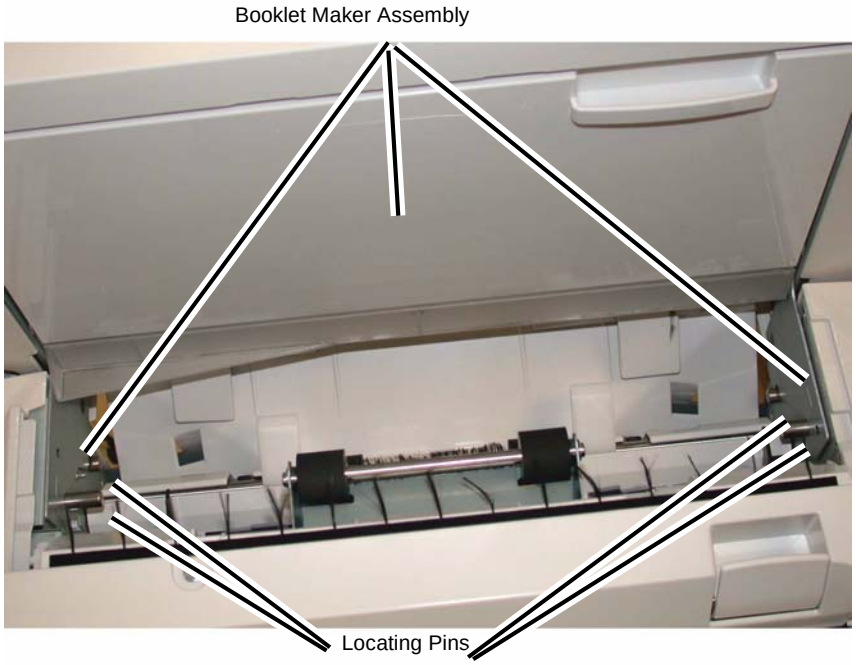

Figure 4 Removing the Booklet Maker Assembly

Replacement

1. Reverse the removal procedure for replacement.

REP 13.32 Booklet Front Cover (Office Finisher LX)

Parts List on PL 23.17

Removal

1. Switch off the power and disconnect the power cord.
2. Remove the Booklet Maker Assembly from the Finisher (REP 13.31).
3. Remove the Booklet Front Cover.
   (1) Remove the Screw (1) (Figure 1).

Figure 1 Removing the Booklet Front Cover

   (2) Remove the Screws (2) (Figure 2).
   (3) Remove the Booklet Front Cover.

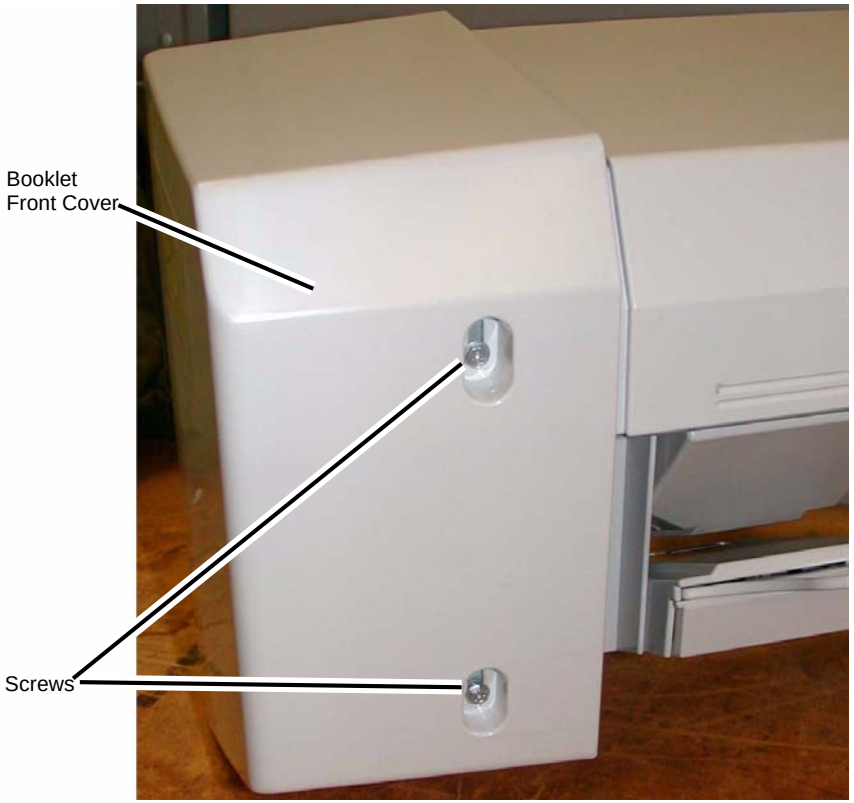

Figure 2 Removing the Booklet Front Cover

Replacement

1. Reverse the removal procedure for replacement.

REP 13.33 Booklet Rear Cover (Office Finisher LX)

Parts List on PL 23.17

Removal

1. Switch off the power and disconnect the power cord.
2. Remove the Booklet Maker Assembly from the Finisher (REP 13.31).
3. Remove the Booklet PWB Cover (REP 13.35).
4. Remove the Booklet Rear Cover.
   (1) Remove the Self-tapping Screws (2) (Figure 1).
   (2) Remove the Booklet Side Cover.

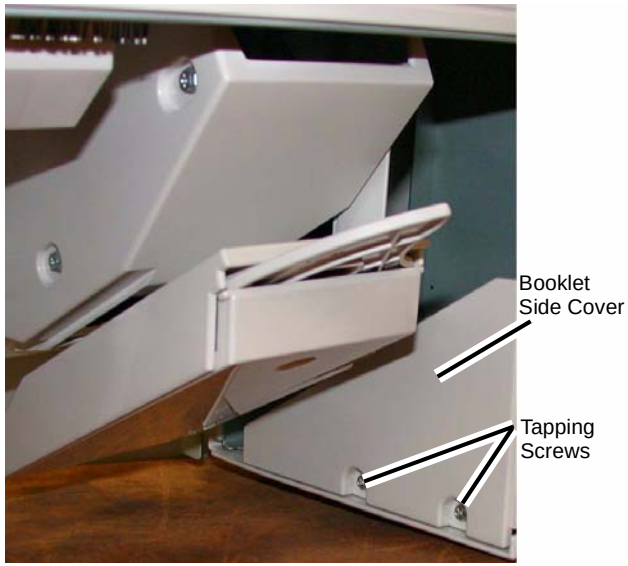

Figure 1 Removing the Booklet Side Cover

   (3) Remove the Screw (1) (Figure 2).
   (4) Remove the Booklet Rear Cover.

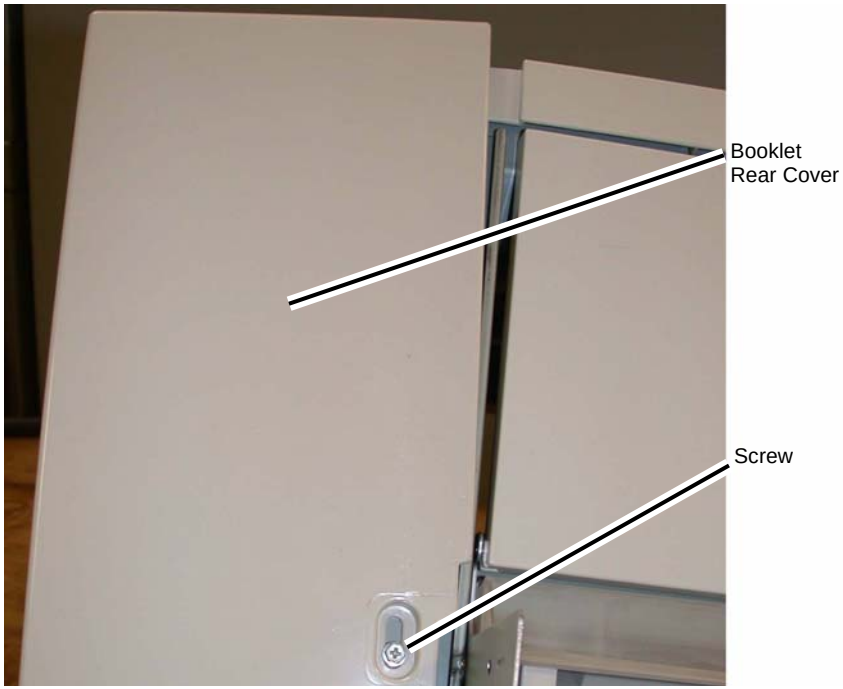

Figure 2 Removing the Booklet Rear Cover

Replacement

1. Reverse the removal procedure for replacement.

REP 13.34 Booklet Top Cover (Office Finisher LX)

Parts List on PL 23.17

Removal

1. Switch off the power and disconnect the power cord.
2. Remove the Booklet Front Cover (REP 13.32).
3. Remove the Booklet Rear Cover (REP 13.33).
4. Remove the Booklet Top Cover (Figure 1).
   (1) Remove the Screws (4).
   (2) Remove the Booklet Top Cover.

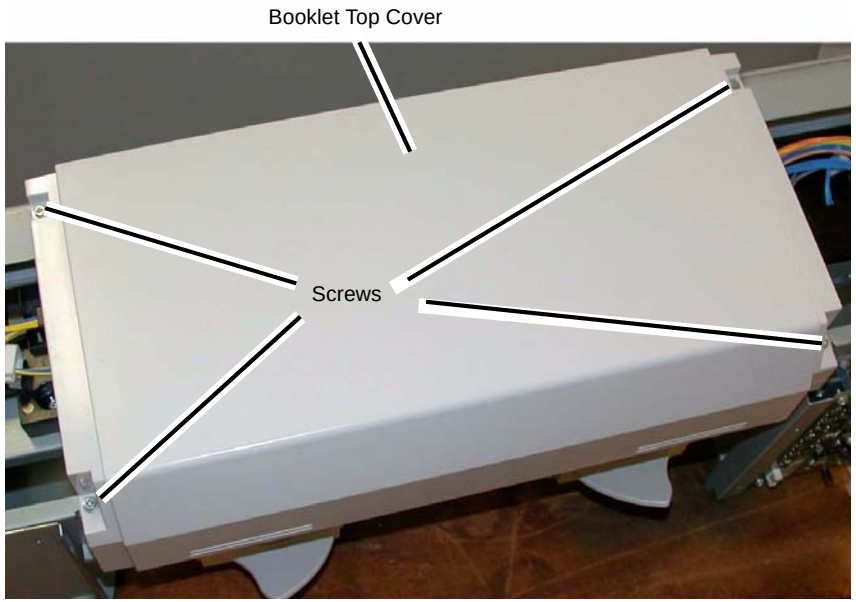

Figure 1 Removing the Booklet Top Cover

Replacement

Reverse the removal procedure for replacement.

REP 13.35 Booklet PWB Cover (Office Finisher LX)

Parts List on PL 23.17

Removal

1. Switch off the power and disconnect the power cord.
2. Remove the Booklet PWB Cover (Figure 1).
   (1) Remove the Self-tapping Screws (2).
   (2) Remove the Screws (2).
   (3) Remove the Booklet PWB Cover.

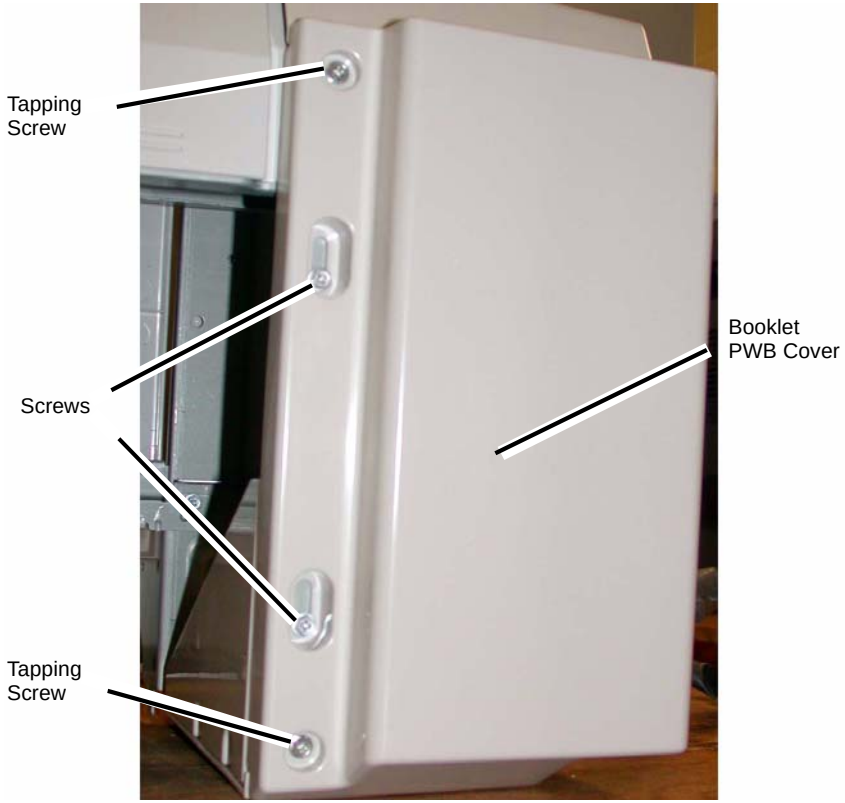

Figure 1 Removing the Booklet PWB Cover

Replacement

Reverse the removal procedure for replacement.

REP 13.36 Booklet Left Cover (Office Finisher LX)

Parts List on PL 23.17

Removal

1. Switch off the power and disconnect the power cord.
2. Remove the Booklet Maker from the Finisher (REP 13.31).
3. Remove the Booklet Maker Left Cover.
4. Align the slots at the front and rear of the Booklet Maker Left Cover with the flats on the Mounting Pins.
5. Move the Booklet Maker Left Cover by allowing the flats on the Mounting Pins to slide through the slots in the Cover.

Replacement

1. Reverse the removal procedure for replacement.

REP 13.37 Booklet Front/Rear Stapler (Office Finisher LX)

Parts List on PL 23.19, PL 23.20

Removal

1. Switch off the power and disconnect the power cord.
2. Remove the Booklet Maker Assembly from the Finisher (REP 13.31).
3. Remove the Stapler Guide (Figure 1).
   (1) Remove the Screw (1).
   (2) Remove the Stapler Guide.

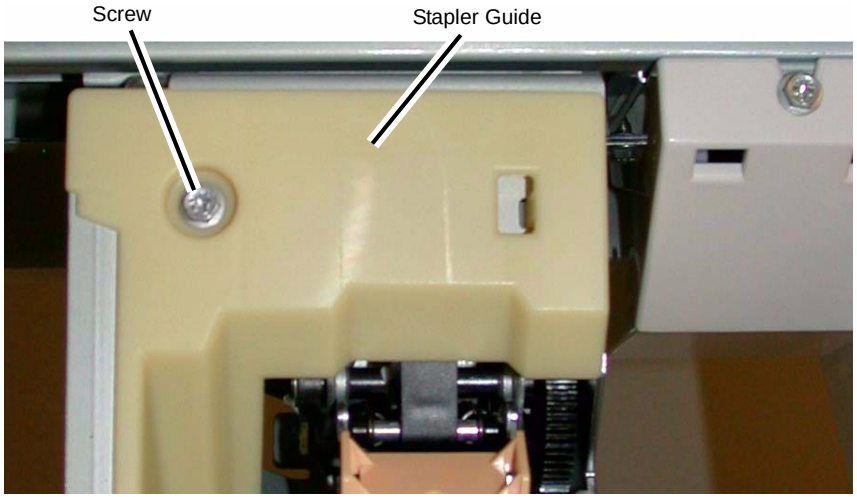

Figure 1 Removing the Stapler Guide

4. Remove the Stapler Lower Cover (Figure 2).
   (1) Remove the Screw (1).
   (2) Remove the Stapler Lower Cover.

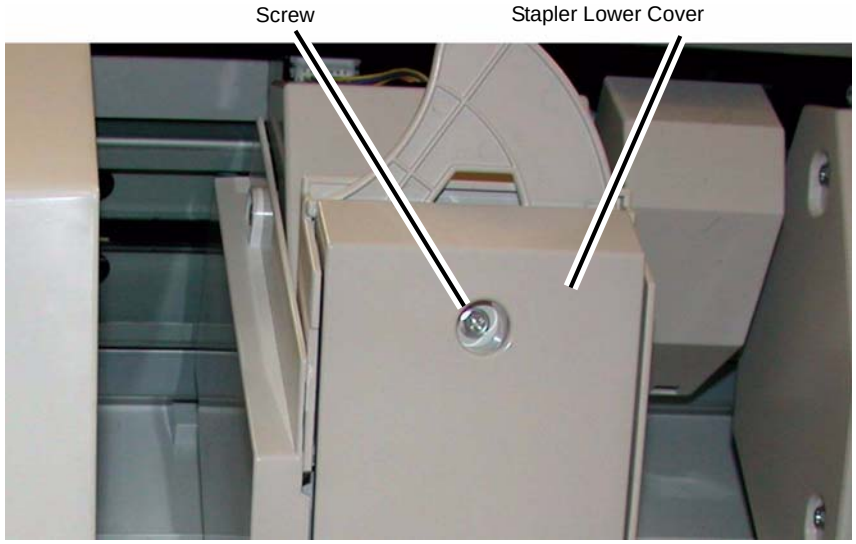

Figure 2 Removing the Stapler Lower Cover

5. Remove the Chute (Figure 3).
   (1) Remove the Screw (1).
   (2) Remove the Chute.
6. Remove the Stapler Rear Cover (Figure 3).
   (1) Remove the Screws (2).
   (2) Remove the Stapler Rear Cover.

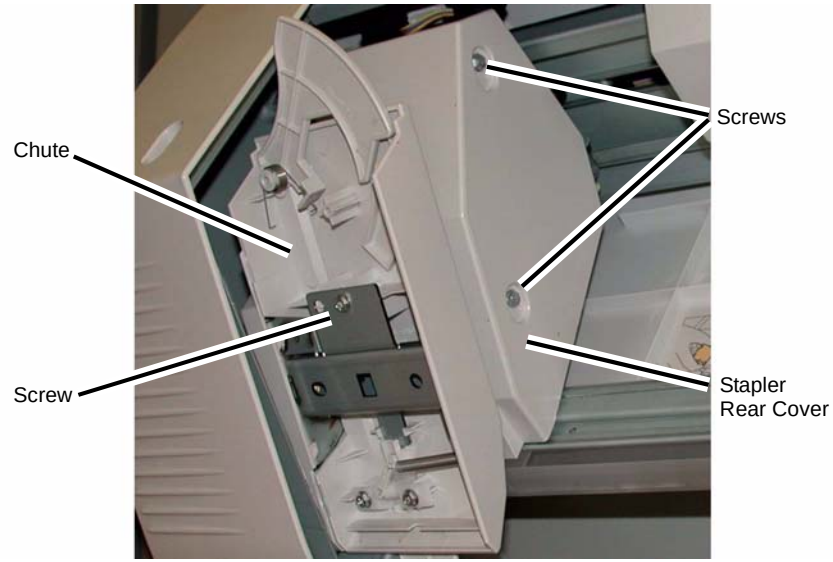

Figure 3 Removing the Chute and Stapler Rear Cover

7. Remove the Stapler (Figure 4).
   (1) Release the wires from the Clip.
   (2) Disconnect the Connector.
   (3) Remove the Screws (3).
   (4) Remove the Stapler.

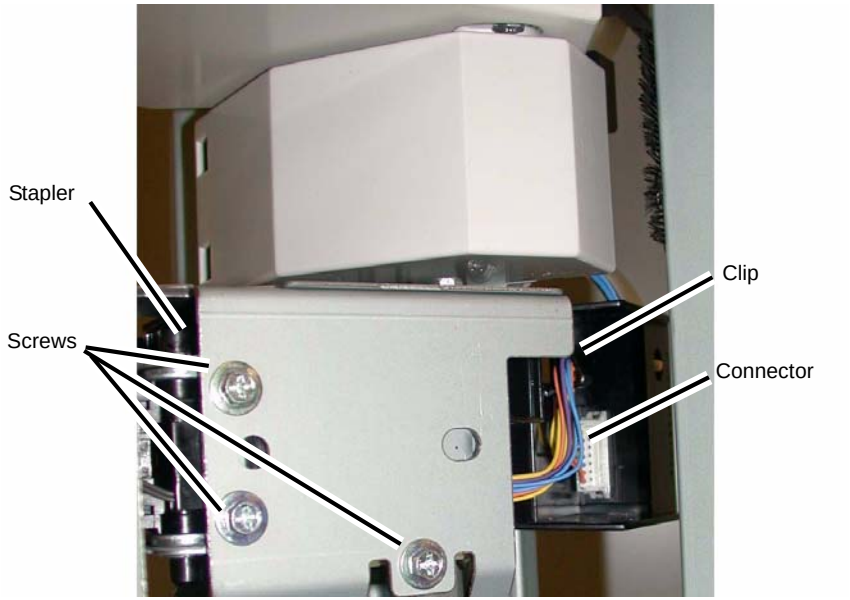

Figure 4 Removing the Stapler

Replacement

1. Reverse the removal procedure for replacement.
2. Perform ADJ 12.2 Finisher LX Booklet Crease/Staple Position

REP 13.38 Booklet Stapler Move Motor (Office Finisher LX)

Parts List on PL 23.18

Removal

1. Switch off the power and disconnect the power cord.
2. Remove the Booklet Maker Assembly from the Finisher (REP 13.31).
3. Remove the Cover for the Booklet Stapler Move Motor (Figure 1).
   (1) Remove the Screw (1).
   (2) Remove the Cover.

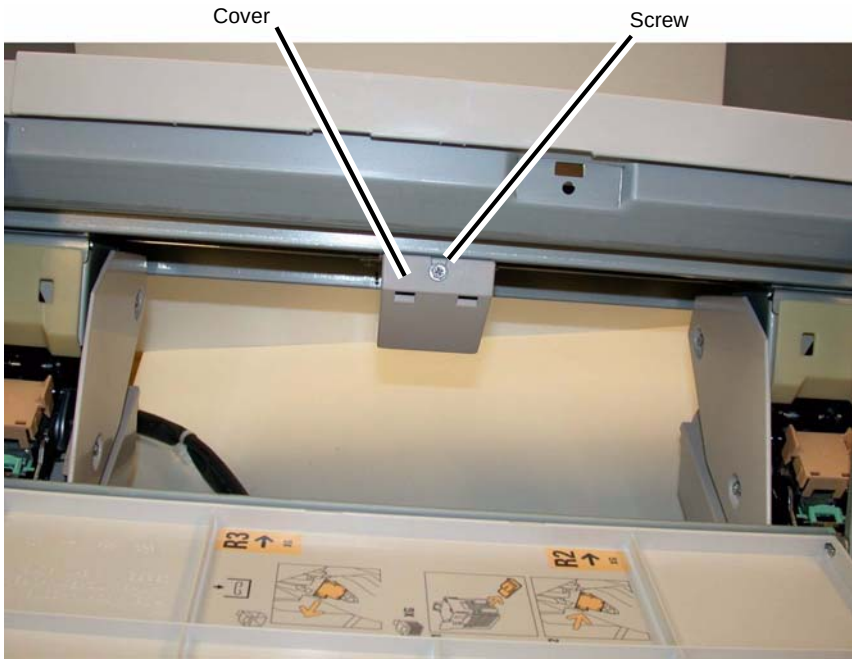

Figure 1 Removing the Cover

4. Remove the Booklet Stapler Move Motor (Figure 2).
   (1) Open the Clip and release the wires.
   (2) Disconnect the Connector.
   (3) Remove the Screws (3).
   (4) Remove the Booklet Stapler Move Motor.

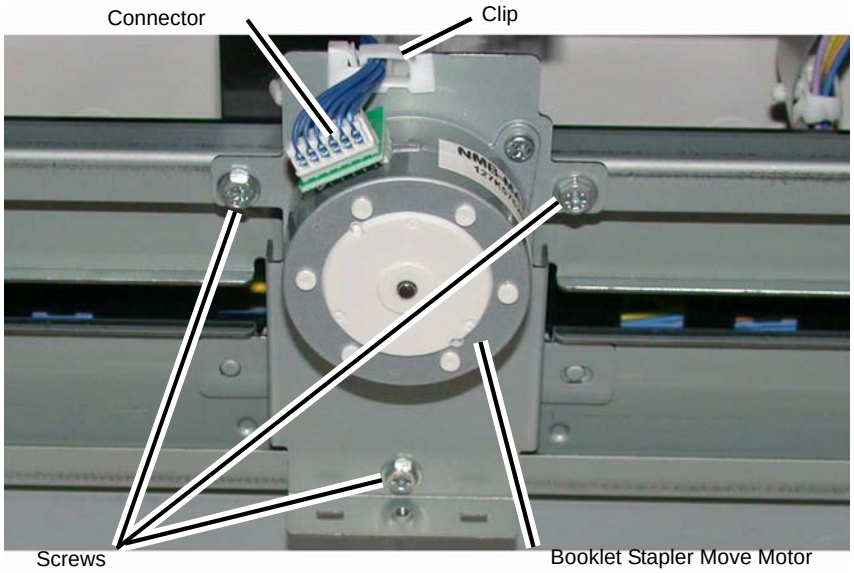

Figure 2 Removing the Booklet Stapler Move Motor

Replacement

1. Reverse the removal procedure for replacement.

REP 14.1 L/H Cover Unit

Parts List on PL 14.1

Removal

1. Switch off the power and disconnect the power cord.
2. Remove the following parts:
   - Rear Lower Cover (REP 14.4)
   - MSI Unit (REP 7.9)
   - L/H Cover Handle
3. Open the L/H Cover Unit.
4. Disconnect the connector. (Figure 1)
   (1) Release the wire harness from the clamp.
   (2) Disconnect the connector.

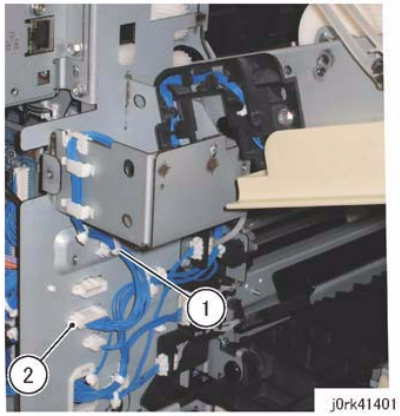

Figure 1 Disconnect the connector

5. Rotate the Front Support 90 degree counterclockwise and remove it from hole of the Frame. (Figure 2)
   (1) Remove the Front Support.

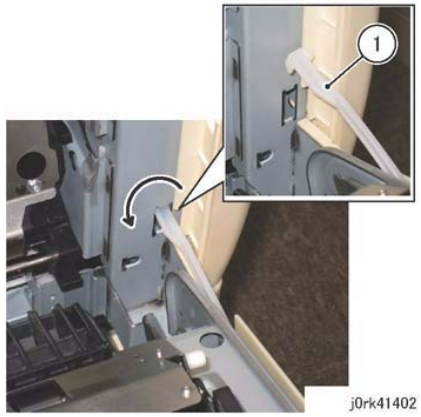

Figure 2 Front Support

6. Remove the Rear Support from the L/H Cover Unit. (Figure 3)
   (1) Remove the KL-Clip.
   (2) Remove the Rear Support.

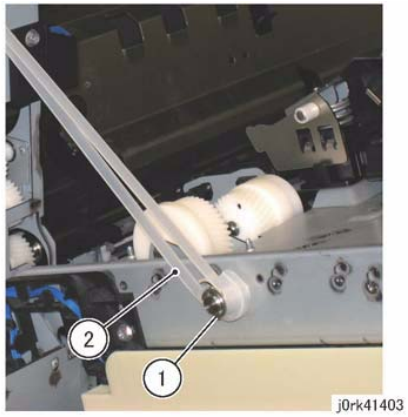

Figure 3 Rear Support

7. Remove the L/H Cover Unit. (Figure 4)
   (1) Remove the L/H Cover Unit from the studs (x2) of the hinge.

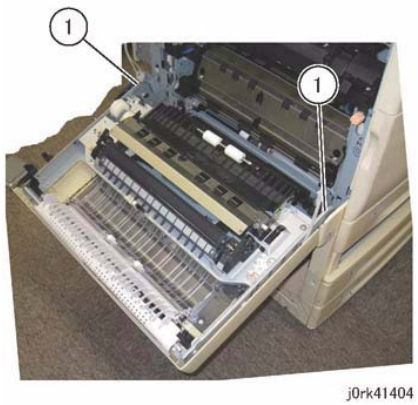

Figure 4 L/H Cover Unit

Replacement

1. To install, carry out the removal steps in reverse order.

REP 14.2 Duplex Assembly

Parts List on PL 14.4

Removal

1. Switch off the power and disconnect the power cord.
2. Open the L/H Cover Unit.
3. Remove the MSI Unit. (REP 7.9)
4. Remove the chute. (Figure 1)
   (1) Remove the screws (x4).
   (2) Remove the Tapping Screws (x2).
   (3) Remove the chute.

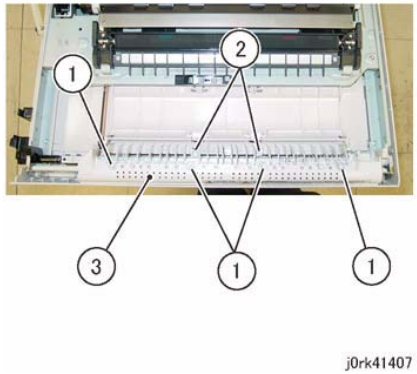

Figure 1 Chute Removal

5. Remove the L/H Cover. (Figure 2)
   (1) Remove the Tapping Screws (x6).
   (2) Remove the L/H Cover.

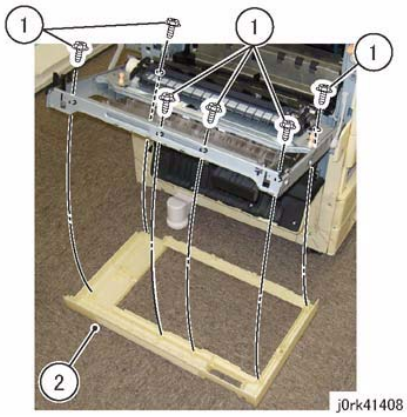

Figure 2 L/H Cover

6. Remove the Duplex Cover. (Figure 3)
   (1) Remove the Duplex Cover.

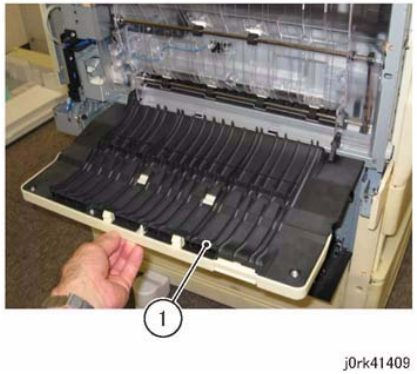

Figure 3 Duplex Cover

7. Remove the Duplex Assembly. (Figure 4)
   (1) Disconnect the connectors (x2).
   (2) Remove the screws (x3).
   (3) Remove the Duplex Assembly.

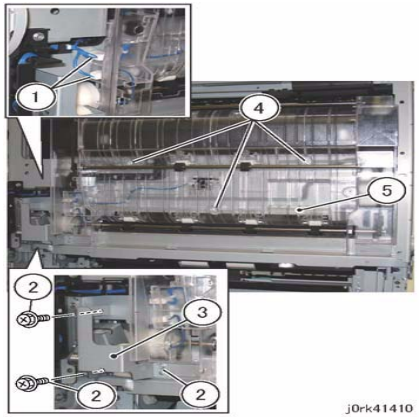

Figure 4 Duplex Assembly

Replacement

1. To install, carry out the removal steps in reverse order.

REP 14.3 Top Cover

Parts List on PL 19.2

Removal

1. Switch off the power and disconnect the power cord.
2. Open the L/H Cover Unit.
3. Loosen the screws (2) securing and the Inner Cover.(Figure 1)
   (1) Loosen the screws (x2).

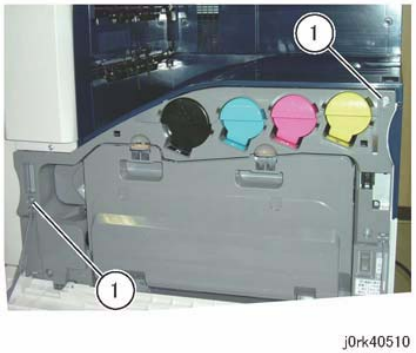

Figure 1 Inner Cover

4. Remove the Front Left Cover and the Exit Front Cover. (Figure 2)
   (1) Remove the screw.
   (2) Remove the Front Left Cover in the direction of the arrow.
   (3) Remove the Exit Front Cover.

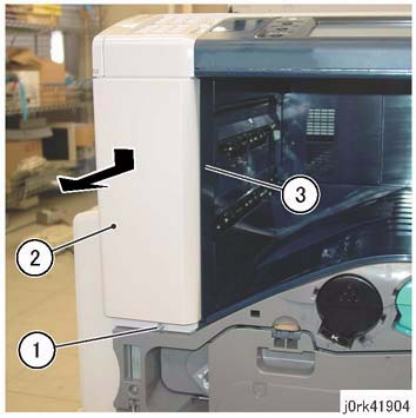

Figure 2 Front Left Cover and the Exit Front Cover

5. Remove the Paper Weight. (Figure 3)
   (1) Release the hook and remove the Paper Weight.

Figure 3 Paper Weight

6. Remove the Top Cover. (Figure 4)
   (1) Remove the screw.
   (2) Remove the Top Cover.

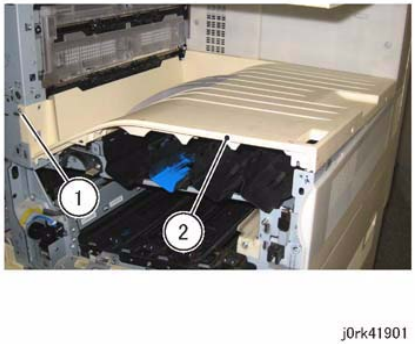

Figure 4 Top Cover

Replacement

1. To install, carry out the removal steps in reverse order.

REP 14.4 Rear Lower Cover

Parts List on PL 19.3

Removal

1. Switch off the power and disconnect the power cord.
2. Open the L/H Cover Unit.
3. Remove the following parts:
   - Rear LV Cover
4. Open the SBC Chassis Cover.
5. Disconnect the connector. (Figure 1)
   (1) Disconnect the connector.

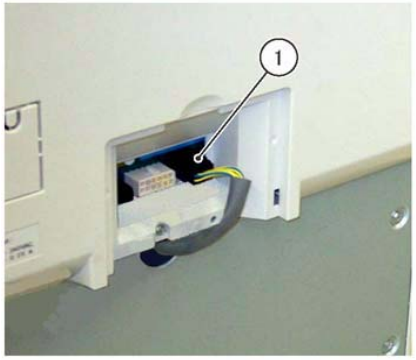

j0rk41902

Figure 1 Disconnect the connector

6. Remove the Rear Lower Cover. (Figure 2)
   (1) Remove the screws (x3).
   (2) Remove the Rear Lower Cover.

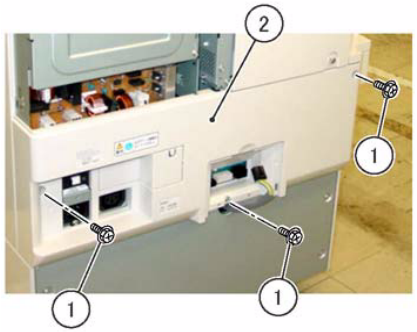

j0rk41903

Figure 2 Rear Lower Cover

Replacement

1. To install, carry out the removal steps in reverse order.

ADJ 4.1 UI Diagnostic Tests

Purpose

This series of tests are built into the UI software to test the functionality of the UI display, UI pixels and color fidelity, Touch Screen response and Control Panel buttons and LEDs.

Procedure

To display the UI Diagnostic Tests menu, simultaneously press the *****, **#**, and C buttons. The menu displays a list of 6 choices. You can select the tests from either the Touch Screen or by using the number key pad on the Control Panel. Each test will have one or more subtests. These tests are selectable from the number keys on the control panel. You can exit any of the top level tests by pressing the 0 button on the Control panel.

1. **LCD Pixel Test** - This test displays a lighted blank screen in the selected color. If the touch screen does not produce a complete solid color (missing pixels), the touch screen is defective.
2. **Touch Panel Calibration** - Use the Touch Pen for this routine. Start the test and touch the cross hatch locations as they are displayed. This will set the correct points of origin for the display.
3. **Touch Panel / Key Test** - Touch Panel - This routine tests the response of the Touch Screen to touch. When the panel is touched a small square is displayed. If a square is touched repeatedly it will toggle on and off. Key Test - This routine tests the response of the Key Pad to touch.
4. **Button Test** - This routine test the functions of the Buttons on the control panel and displays the results on the UI as a color change on the button display.
5. **Display Vertical Test** - This test displays eight different vertical gradient patterns. These patterns are selected with the numeric key pad on the control panel:
   - 1 - Red Gray Scale
   - 2 - Green Gray Scale
   - 3 - Blue Gray Scale
   - 4 - Display 3 Vertical - RGB three bar display
   - 5 - Display 3 Vertical - 33 Bars RGB
   - 6 - Display 3 Vertical - 50 Bars RGB
   - 7 - Display 3 Vertical - 100 Bars RGB
   - 8 - Display 3 Vertical - 200 Bars RGB
   - 0 - Exit routine
6. **LED Test** - This routine tests the functionality of the LEDs on the Control panel. Select the test to perform and press the buttons on the control panel that have LEDs associated with them; the display on the UI will indicate which button was detected, and the LED will light. There is also a test that causes the LEDS to blink in a pattern after the LEDs have been switched on.

Select 0 to exit the procedure.

ADJ 5.1 DADF Lead-Skew Adjustment

Parts List on PL 51.1

Purpose

To correct the feeding of the original by adjusting the position of the DADF. (DADF Lead-Skew, Perpendicularity)

NOTE: *The following adjustments must be made before carrying out checking and adjustment.*

- *IOT Lead Edge/Side Edge Registration (ADJ 9.10)*
- *IIT Side Registration (ADJ 6.4)*

Check

1. Place the Test Chart 82E8220 on the Platen Glass.
2. Place 11x17” paper in Tray 1.
3. Make a copy using the following settings in Copy mode.
   a. On the UI Ready to Copy Screen, select the Copy tab.
   b. Under Output Color select Black and White.
   c. Under the Paper Supply select 11x17” paper size.
   d. Under 2 Sided Copying select 1 Sided.
   e. Reduce / Enlarge should be set to 100%.
   f. On the UI Ready to Copy Screen, select the Layout Adjustment tab, Image Shift should be Off. Select Save if necessary.

   NOTE: *The copy made from the Platen Glass will be used as the original in the DADF.*

4. Place the copy made from the Platen Glass into the DADF and make 3 copies.
5. Check that the difference in the distance between the side and the Edges at the 100mm mark and the 300mm mark in the 3 copies is within 00.5mm. (Figure 1)

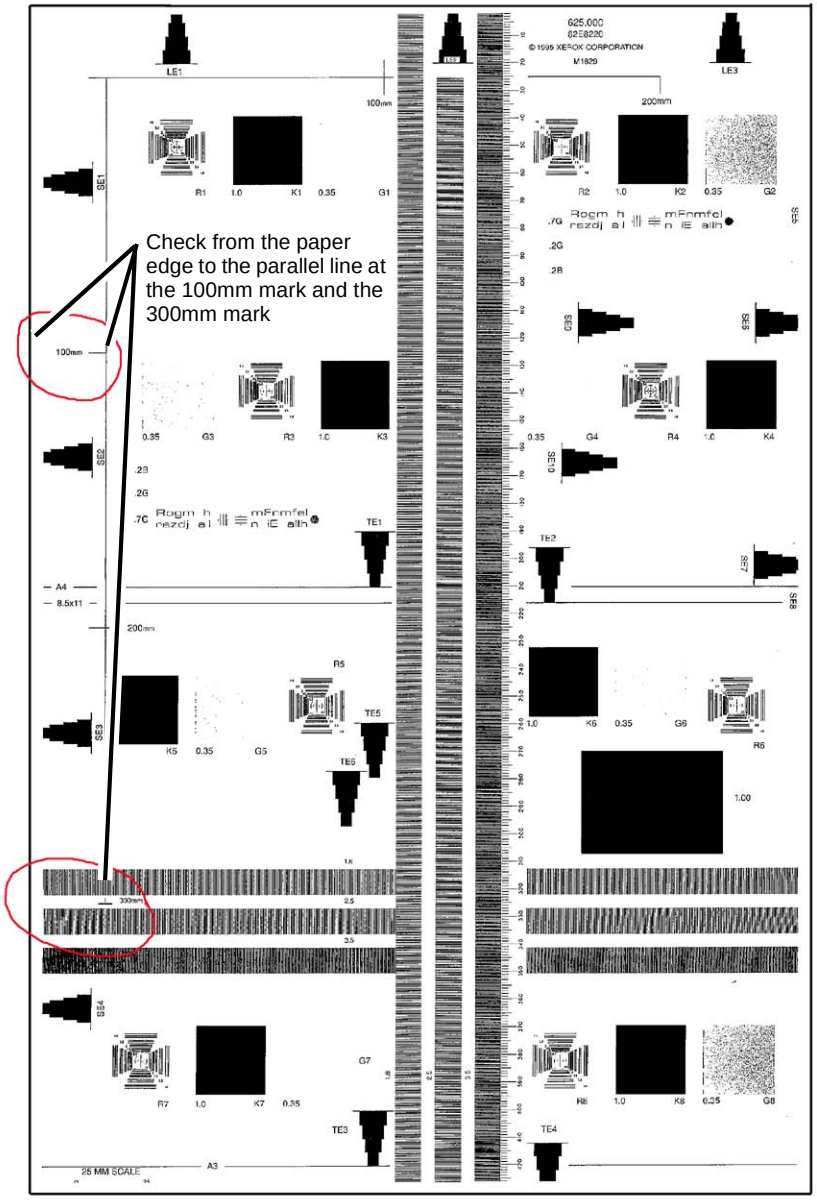

Figure 1 Checking the Skew

6. If the value is not within the specified range, perform the Adjustment:

Adjustment

1. Remove the DADF Rear Cover REP 5.4.
2. Adjust the position of the DADF by moving the DADF in direction A or B. (Figure 2)
   (1) Loosen the screws (x3).
   (2) Move the DADF in direction A or B.
   (3) Tighten the screws (x3).

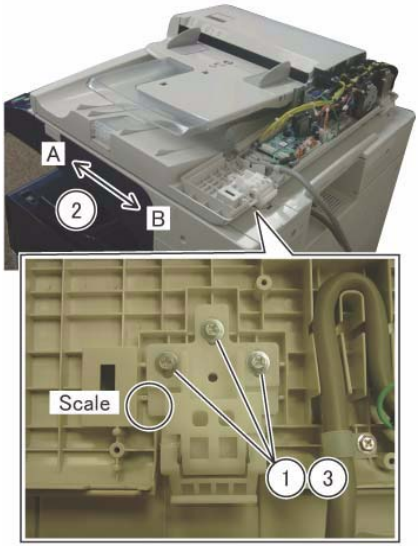

j0ki45105

Figure 2 DADF Rear Cover.

- The DADF moved in direction A. (Figure 3)

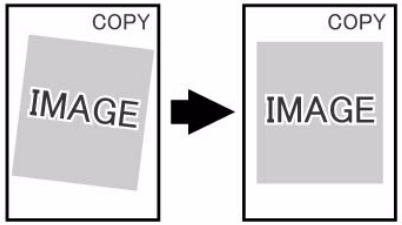

j0ku42044

Figure 3 Direction A

- The DADF moved in direction B. (Figure 4)

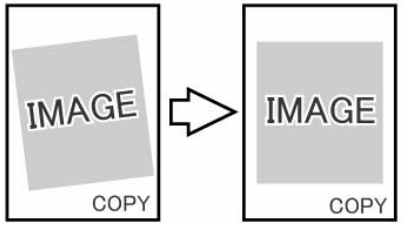

j0ku42043

Figure 4 Direction B

3. Reinstall the DADF Rear Cover.
4. After adjustment, perform DADF Side Registration (ADJ 5.2) and DADF Lead Edge Registration. (ADJ 5.4).

ADJ 5.2 DADF Side Registration - TBD - see note

Parts List on PL 51.1

Purpose

To adjust the original to the proper position (drum shaft direction) on the Platen.

NOTE: *The following adjustments must be made before carrying out checking and adjustment.*

- *IOT Lead Edge/Side Edge Registration (ADJ 9.10)*
- *IIT Side Registration (ADJ 6.4)*
- *DADF Lead-Skew Adjustment (ADJ 5.1)*

NOTE: *DADF Side Registration is adjusted using the NVM for every paper width.*

Check

Create a test pattern

1. To create a Cross Line Test Pattern, use a plain white sheet of 8.5x11”/A4 paper and fold the sheet precisely in half lengthwise and width wise. Then with a straight edge draw a straight line in the lengthwise crease and a straight line in the width wise crease.

   Label the top for orientation purposes. (Figure 1)

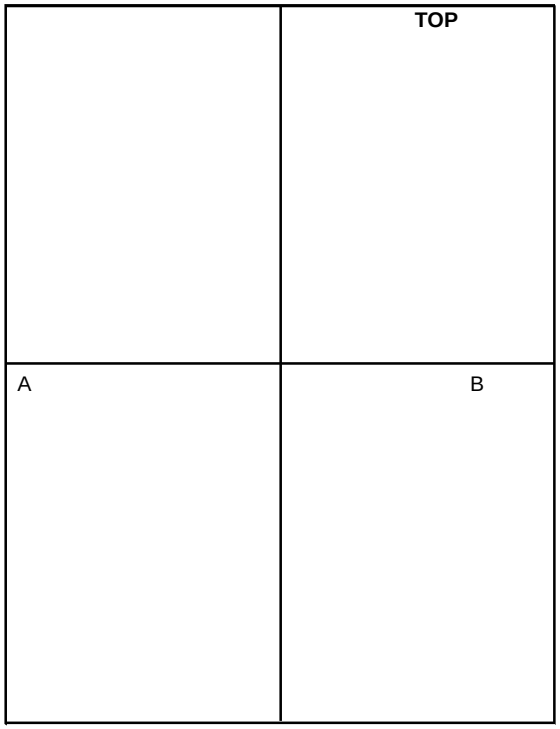

Figure 1 Creating a Test Pattern Original

DADF Side Edge Registration Check - Side 1

1. Load Tray 1 with 8.5x11”/A4 paper.
2. Place the new Cross Line Test Pattern on the DADF with the word TOP **Face Up** and towards the rear of the DADF.
3. Select the following:
   - Tray 1
   - 1-1 Sided.
   - 100%
   - 1 copy
4. Make one copy to the center tray.
5. Remove the copy from the center tray and **Flip the copy left to right.**
6. Fold the copy in half parallel to the short edge (A to B in Figure 1).
7. Check that the fold line is within 2.0mm from the reference line. If the value is not within the specified range, perform the Side 1 Adjustment. If the Check is OK, perform the DADF Side Edge Registration Check - Side 2.

DADF Side Edge Registration Check - Side 2

1. Place the Cross Line Test Pattern on the DADF with the word TOP **Face Down** and towards the rear of the DADF.
2. Select the following:
   - Tray 1
   - 2-2 Sided.
   - 100%
   - 1 copy
3. Make one copy to the center tray.
4. Remove the copy from the center tray but **DO NOT FLIP** the copy this time.
5. Fold the copy in half parallel to the short edge (A to B in Figure 1).
6. Check that the fold line is within 2.0mm from the reference line. If the value is not within the specified range, perform the Side 2 Adjustment.

Adjustment

Side 1 Adjustment - TBD - the only NVM value that works is 711-272 - the others return “an invalid ID was entered”

NOTE: *In order for the following NVM changes to take effect, you must exit diagnostics and switch the power off, then on.*

1. Enter NVM Read/Write. Change the value in location 711-272 to perform correction for all sizes. Change the value in the locations listed in Table 1 to perform correction for a specific size.

Table 1 Side 1

	NVM	Document Width	Document Size
1	711-272	For all sizes	For all sizes
2	715-056	139.7~148.0mm	A5 SEF, 5.5x8.5” SEF
3	715-058	182.0~194.0mm	B5 SEF, 16K SEF
4	715-060	203.2mm	8x10" SEF, 8x10.5" SEF
5	715-062	210mm	A4 SEF, A5 LEF
6	715-064	214.9~215.9mm	Letter SEF, Legal SEF, 5.5x8.5" LEF, 8.46x12.4" SEF, 8.5x13" SEF
7	715-066	254.0~257.0mm	B4 SEF, B5 LEF, 8x10" LEF
8	715-068	266.7~267.0mm	16K LEF, 8K LEF, 8x10.5" LEF
9	715-070	279.4mm	Letter LEF, 11x15" SEF, 11x17" SEF
10	715-072	297mm	A4 LEF, A3 SEF

2. Increase the value to move the image toward “TOP.” Each bit represents 0.1% change.
3. Repeat Check and Adjustment until the measurement is within the specified range.

Side 2 Adjustment - TBD - the only NVM value that works is 711-274 - the others return “an invalid ID was entered”

1. Enter NVM Read/Write. Change the value in location 711-274 to perform correction for all sizes. Change the value in the locations listed in Table 2 to perform correction for a specific size.

Table 2 Side 2 of 2 Sided mode

	NVM	Document Width	Document Size
1	711-274	For all sizes	For all sizes
2	715-057	139.7~148.0mm	A5 SEF, 5.5x8.5" SEF
3	715-059	182.0~194.0mm	B5 SEF, 16K SEF
4	715-061	203.2mm	8x10" SEF, 8x10.5" SEF
5	715-063	210mm	A4 SEF, A5 LEF
6	715-065	214.9~215.9mm	Letter SEF, Legal SEF, 5.5x8.5" LEF, 8.46x12.4" SEF, 8.5x13" SEF
7	715-067	254.0~257.0mm	B4 SEF, B5 LEF, 8x10" LEF
8	715-069	266.7~267.0mm	16K LEF, 8K LEF, 8x10.5" LEF
9	715-071	279.4mm	Letter LEF, 11x15" SEF, 11x17" SEF
10	715-073	297mm	A4 LEF, A3 SEF

2. Repeat the Check and Adjustment until the measurement is within the specified range.

NOTE: *The Values of NVM 711-272 and 711-274 are written to NVM’s 715-110, 715-111, 715-112, and 715-113, when the machine power is switched on.*

- *711-272 = 715-110*
- *711-274 = 715-111, 715-112, 715-113*

ADJ 5.3 DADF Original Detection Correction (Size Detection Auto-Correction) - TBD - see note

Parts List on PL 51.1

Purpose

To automatically adjust the original size during DADF scan to the desired original size.

Proceed with this adjustment only after the following operations/events.

- The DADF Assembly is replaced.
- An abnormality is detected after replacing the Reg. Roll, Feed Roll and Retard Roll.
- A size detection error occurs.

Overview

Using the DADF, continuously scan 3 originals. The NVM Data is automatically corrected based on the comparison between the Slow Scan Length and the reference value detected by the DADF. The NVM Data that is corrected is "Size Correction Value for Slow Scan Originals in Non CVT Mode" (Chain Link No. 710-552). (Table 1)

Scanned originals differ according to the market as follows:

FX, XE/AP: A4 LEF (Slow scan length accuracy (210.0mm +/- 0.7mm))

XC: 8.5"x11" LEF (Slow scan length accuracy (215.9mm +/- 0.7mm))

Adjustment

1. Enter UI Diagnostics "ADF Independent Operation (Size Detection Auto Adjust)".
2. Set 3 documents to be transported in the DADF.

   * The size of the fed original differs according to the market.

   FX, XE/AP: A4 LEF (Slow scan length accuracy (210.0mm +/- 0.7mm))

   XC: 8.5"x11" LEF (Slow scan length accuracy (215.9mm +/- 0.7mm))
3. When the [**Start**] button is pressed, the DADF starts pulling in the document and the correction value is calculated. At this point, the message "In progress" appears.
4. The applicable NVM Data will then be updated. After the operation, the UI screen will be displayed.

   However, if this operation results in an NG, the NVM will not be updated and a message indicating that an NG has occurred will be displayed.
5. The operation ends when the [Stop] button is pressed.

   Status Confirmation Specifications

You may check the following status by using NVM Read after operations. - TBD - the NVM value listed returns “an invalid ID was entered”

Table 1 DADF Size Detection

Chain-Link	Display Data Name	Reference
710-552	Size Correction Value for Slow Scan Originals in Non CVT Mode	Setting Range=144 to 256 (equivalent to +/-56 increments [+/-10mm] <–0.18mm/increment) Initial Value: 200 (However, there is an adjusted value set against the initial value when shipped.)

<Image Quality Restrictions>

- This operation cannot be terminated (or aborted) halfway through the process and has to be completed from start to finish regardless of any abnormalities that occur.
- In cases where more than 4 originals are loaded in the DADF, this operation will not feed the originals that are fed after the fourth sheet.

NOTE: *If the problem still exists after the adjustment, repeat the procedure.*

ADJ 5.4 DADF Lead Edge Registration

Parts List on PL 1.4

Purpose

To adjust the original to the proper position (original feed direction) on the Platen.

NOTE: *The following adjustments must be made before carrying out checking and adjustment.*

- *IOT Lead Edge/Side Edge Registration (ADJ 9.10)*
- *IIT Lead Edge Registration (ADJ 6.3)*
- *IIT Side Edge Registration (ADJ 6.4)*
- *DADF Lead-Skew Adjustment (ADJ 5.1)*

Check

1. Place the 82E8220 Test Pattern on the Document glass with the trade mark and part number as the lead edge.
2. Set up the machine to make two sided copies of the test pattern as follows:
   a. On the UI Ready to Copy Screen, select the Copy tab.
   b. Under Output Color select Black.
   c. Under the Paper Supply select 11x17” paper size.
   d. Under 2 Sided Copying select 1 to 2 Sided.
   e. Reduce / Enlarge should be set to 100%.
   f. On the UI Ready to Copy Screen, select the Layout Adjustment tab, Image Shift should be Side 1 and Side 2 No Shift. Select Save.
3. Select a Quantity of 5.
4. Press the **Start** button to make a copy of side 1.
5. After side 1 is made, place a small piece of paper with the words side 2 written on it, onto the Document Glass and under the 82E8220 Test Pattern.

   NOTE: *Side 2 can now be identified by the word “side 2” copied from the small piece of paper placed on the Document Glass under the test pattern from previous step.*

6. Press the **Start** button to make a copy of side 2.

   NOTE: *The 2 sided copies will be used to run duplex sets for measurement through the DADF.*

7. Place the 2 sided copies into the DADF and make one set of 2 sided copies.
8. On side 1 and side 2, measure on the scale from the 10 mm line to the edge of the paper. The measurement should as follows. (Table 1)

   If the value is not within the specified range, perform the Adjustment:

Table 1 Specification

Item	Simplex	Duplex
Lead Edge	10 ± 0.5mm	10 ± 0.5mm

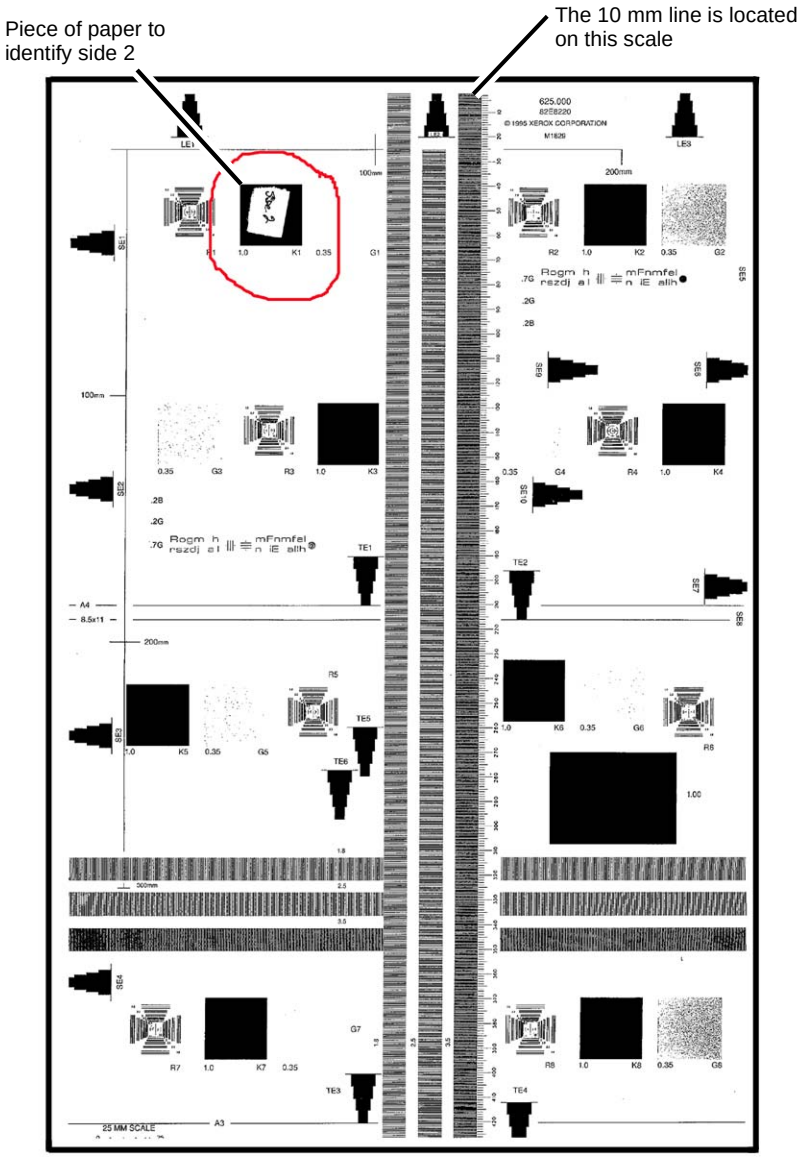

Figure 1 Identifying side 2

9. If the value is not within the specified range, perform the Adjustment:

Adjustment

1. Enter the Diagnostic mode (Accessing UI Diagnostics.).
2. Select NVM Read/Write.
3. Adjust the Lead Edge using the NVM locations specified in Table 2 until the measured value falls within specifications.
   - each bit equals approximately 0.06 mm
   - increasing the value moves the image toward the Lead Edge

Table 2 NVM List

Chain Link	Name	Min.	Initial	Max
711-140	DADF Lead Reg. Adjustment (Side 1) Replace All	80	129	230
711-141	DADF Lead Reg. Adjustment (Side 2) Replace All	80	129	230

4. Repeat Check and Adjustment until the Lead Edge measurement is within the specified range.

ADJ 6.1 Optical Axis Correction

Parts List on PL 1.1

Purpose

The purpose of this adjustment is to align the CCD with the lens.

CAUTION

This procedure should only be performed if the Lens Kit is replaced, or if the documentation specifically directs.

Check

1. Install the Platen Glass.

CAUTION

Stray light will adversely affect the check. If there is significant ambient light around the machine (especially fluorescent light), open the platen cover as little as required to start the scan, and/or shroud the machine with a drop cloth, in order to keep as much stray light as possible away from the Lens and CCD.

2. Ensure the document cover or DADF is fully raised and that there is nothing on the platen glass.
3. Enter UI Diagnostics (UI Diagnostic (CSE) Mode). Raise the platen cover. Select the **Adjustment Tab**, **dC945 IIT Cal**ibration, and then select the **Optical Axis Correction** and press **Start**.
4. Check the results in the **Optical Axis Set Results** box. If **OK** is displayed in the **Result** box, the check is good. Adjust the IIT Calibration (ADJ 6.6).
5. If the tool displays **NG**, perform the Adjustment.

Adjustment

1. Remove the Platen Glass and the Optics cover.
2. Place an index mark on the barrel of a 5.5mm nut driver. The following figure shows the tool and the adjusting nuts. (Figure 1)

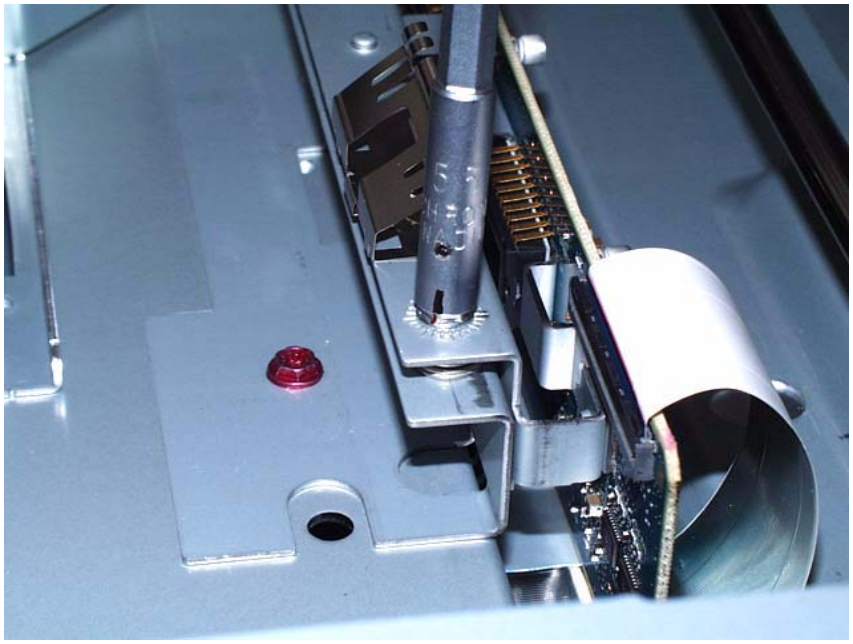

Figure 1 Tool and Front Optics Adjusting Nut

3. Check the results in the **Front Nut Correction Angle** and the **Rear Nut Correction Angle** box. The values displayed indicate the amount and direction of the correction required:
   - + means rotate clockwise
   - - means rotate counterclockwise
   - The amount of correction is displayed in degrees. Each division around the nut represents 15 degrees (divide the displayed value by 15 to get the number of divisions). If a value higher than 990 is displayed, this may indicate that insufficient light is entering the CCD. Make sure that the Lens and Platen Glass are clean.
4. Make the indicated correction for both the front and rear screws,
5. Reinstall the Platen Glass and the Optics cover, then select on **Start** on the screen.
6. Repeat the Check and Adjust until **OK** is displayed.
7. Reinstall the Optics Cover and reinstall the Platen Glass.
8. Check/Adjust the IIT Calibration (ADJ 6.6).

ADJ 6.2 Full/Half Rate Carriage Position Adjustment

Parts List on PL 1.3

Purpose

Adjust the position of the Full/Half Rate Carriage.

Adjustment

1. Press the **Job Status** button to check that there are no jobs in progress.
2. Switch off the power and disconnect the power cord
3. Open DADF or the Platen Cover.
4. Remove the Platen Glass (REP 6.2)
5. Remove the Lens Cover Assembly (PL 18.4)
6. Remove the alignment pins from the Lens Assembly (Figure 1):

   NOTE: *When removing the alignment pins, never remove the screws (x4) that secure the Lens Base.*

   (1) - Remove the screws (x2).

   (2) - Remove the alignment pins (x2).

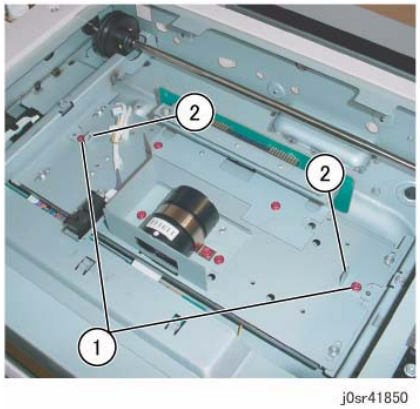

Figure 1 Remove the Alignment Pins

7. Align the alignment pin holes in the Half Rate Carriage with the holes in the rail (Figure 2).

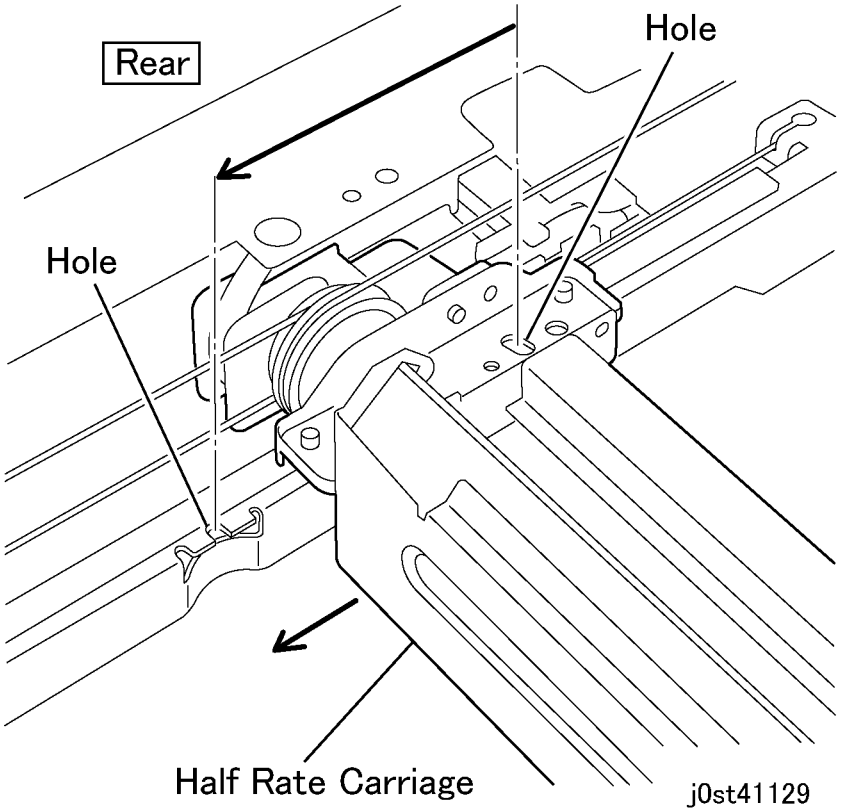

Figure 2 Aligning the Half Rate Carriage 1/3

8. Install the alignment pin to the Half Rate Carriage. (Figure 3)

   NOTE: *Install the alignment pins near the edges (the front tool to the front and the rear tool to the rear). The illustrations show only the rear.*

   (1) - Position the alignment pins. (Front/Rear)

   (2) - Secure with a screw.

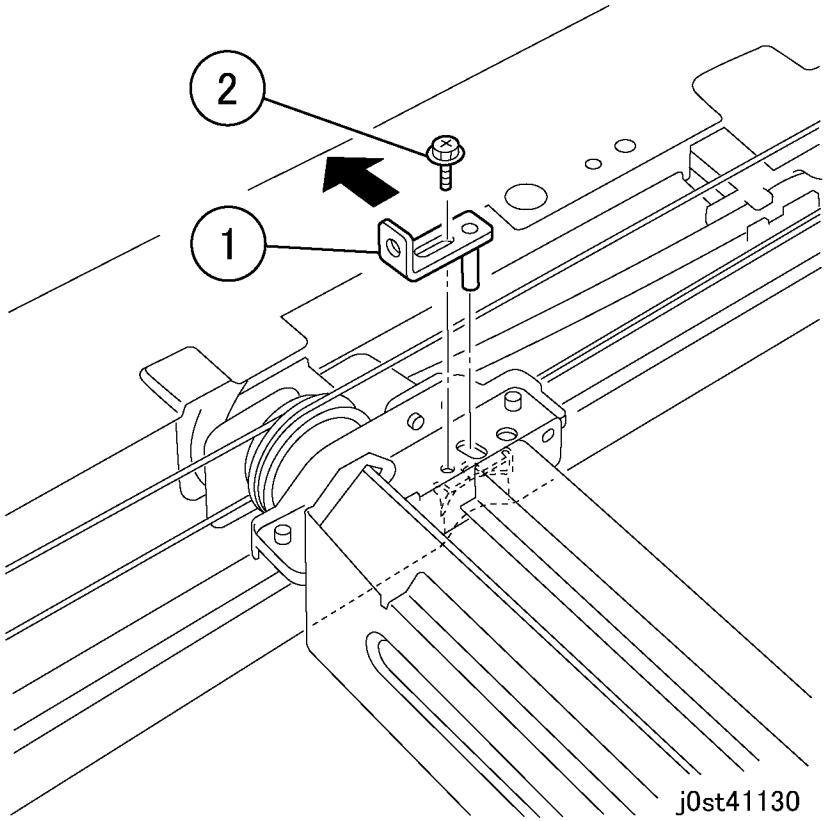

Figure 3 Installing Alignment Pins on Half Rate Carriage

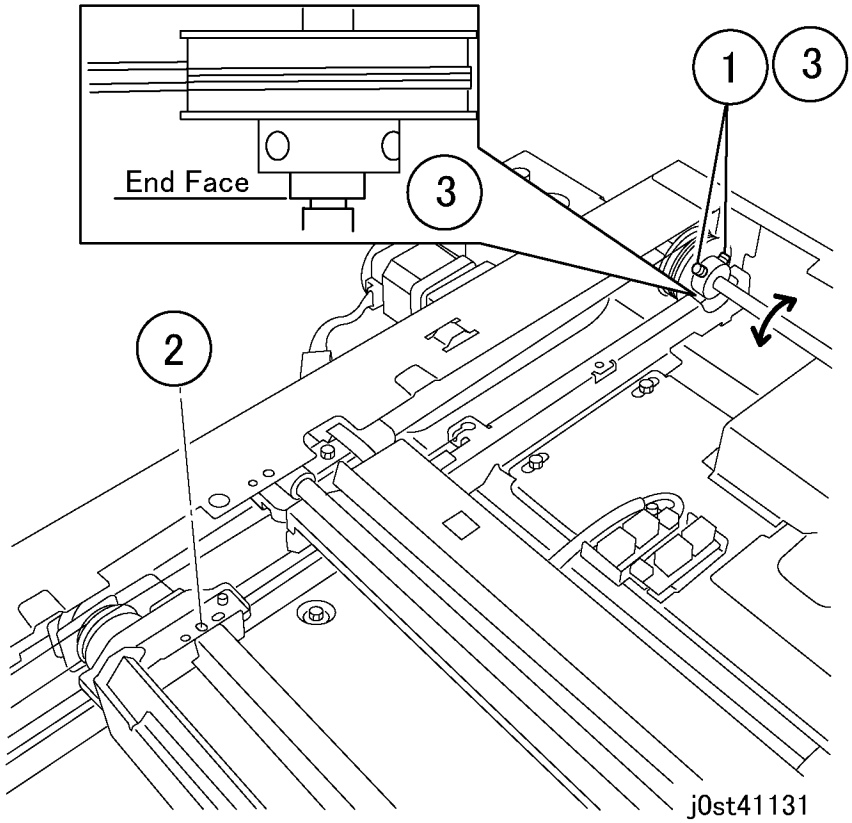

Figure 4 Position Adjustment of Half Rate Carriage

NOTE: *The position of the pulley can be changed if the alignment pin holes in the Half Rate Carriage and the rail do not align and the tool cannot be inserted correctly. Perform step 9 if the holes do not align; otherwise proceed to step 10.*

9. Adjust the pulleys (Figure 4).
   (1) - Loosen the set screws (x2).
   (2) - Turn the Pulley until the tool holes align.
   (3) - Align the shaft concave with the Pulley end face and tighten the screws (x2).

10. Align the Full Rate Carriage (rear) (Figure 5).
    (1) - Loosen the securing screw of the Carriage Cable.
    (2) - Move the Full Rate Carriage until the pin holes align.
    (3) - Tighten the screw.

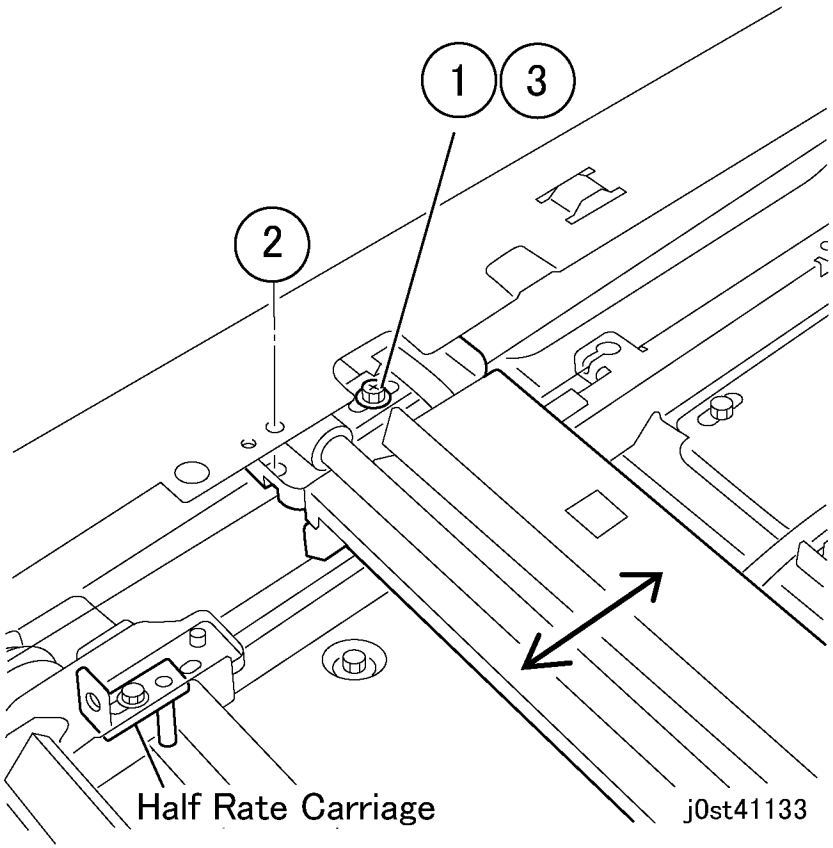

Figure 5 Aligning the Full Rate Carriage

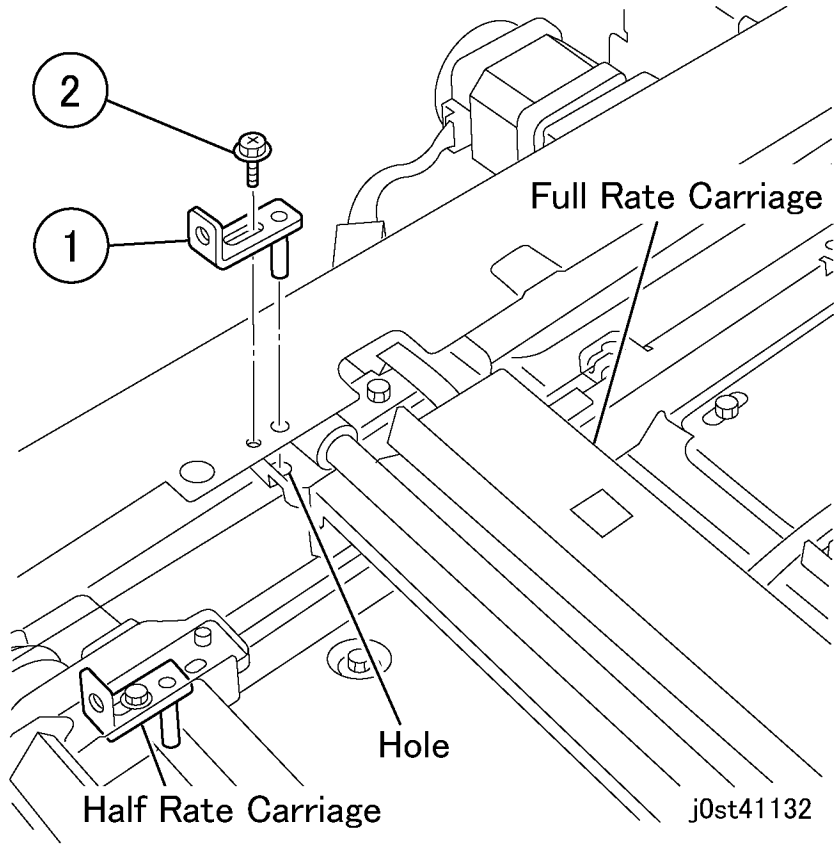

Figure 6 Position Adjustment of Full Rate Carriage

11. Remove the alignment pin from the front of the Half Rate Carriage and install at the rear of the Full Rate Carriage. (Figure 6). The rear tool for Half Rate Carriage remains installed.
    (1) - Install the alignment pin.
    (2) - Secure with a screw.

12. Align the front of the Full rate Carriage:
    - Loosen the securing screw of the Carriage Cable if necessary in order to align the holes.
    - Remove the alignment pin from the rear of the Half Rate Carriage and install at the front of the Full Rate Carriage.
    - Tighten the securing screw of the Carriage Cable
13. Slide the Full Rate Carriage to ensure that it moves smoothly.
14. Reinstall the Alignment Pins to their original positions.
15. Reinstall the Lens Cover Assembly to its original state.
16. Manually move the Full Rate Carriage to ensure that it moves smoothly.

ADJ 6.3 IIT Lead Edge Registration

Parts List on PL 1.1

Purpose

To adjust the IIT scan timing in the Slow Scan direction and to correct the copy position.

Check

CAUTION

Perform this adjustment only if absolutely required; the IIT Lead Edge Registration affects the precision of the document size detection.

NOTE: *Before performing this procedure, make sure that the IOT Lead Edge Registration is correct. Refer to ADJ 9.10, IOT Side/Lead Edge Registration.*

1. Place the Geometric Test Pattern (82E8220) on the Platen Glass correctly and make copies with the following settings:
   - Copy Mode: Black
   - Paper Size: 11 x 17 in or A3
   - Magnification: 100%
   - No. of Copies: 2
2. On the 2nd copy, check that the distance from the lead edge to the top of Step 3 on the LE2 scale is 10.0mm +/- 2.1mm (Figure 1).

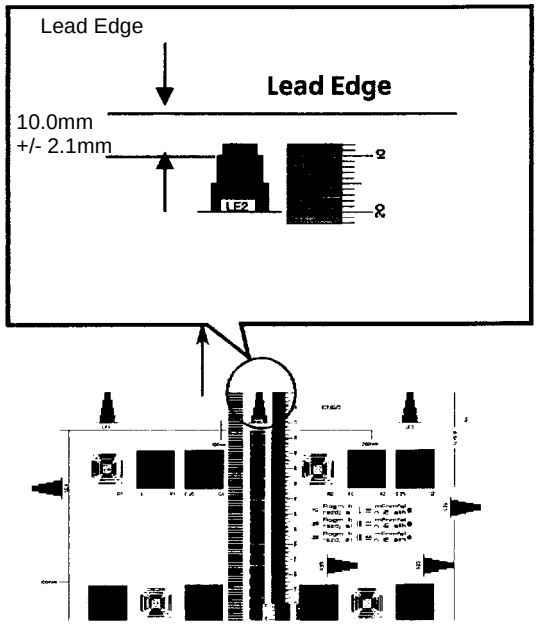

Figure 1 Checking IIT Lead Registration

3. If the value is not within the specified range, Perform the Adjustment:

Adjustment

1. Enter the Diagnostic mode (UI Diagnostic (CSE) Mode).
2. Select the **Adjustment Tab**.
3. Select the dC131 **NVM Read/Write** location [715-050].
4. Change the value.
   - 1 increment: 0.029mm
   - Increment of the value: The image moves to the Tail Edge.
   - Decrement of the value: The image moves to the Lead Edge.
5. Repeat Check and Adjustment until the Lead Edge measurement is within the specified range.

ADJ 6.4 IIT Side Registration

Parts List on PL 1.1

Purpose

To adjust the IIT scan timing in the Fast Scan direction and to correct the copy position.

Check

CAUTION

Perform this adjustment only if absolutely required; the IIT Side Edge Registration affects the precision of the document size detection.

NOTE: *Before performing this procedure, make sure that the IOT Side Edge Registration is correct. (Refer to ADJ 9.10, IOT Side/Lead Edge Registration.)*

1. Load 11 x 17 in. or A3 paper into Tray 2.
2. Place the Geometric Test Pattern (82E8220) on the Platen Glass correctly and make copies with the following settings:
   - Copy Mode: Black
   - Paper Tray: Tray 2
   - Magnification: 100%
   - No. of Copies: 2
3. On the 2nd copy, check that the distance from the lead edge to the top of Step 3 on the SE2 and SE3 scales is 10.0mm +/- 1.6mm (Figure 1).

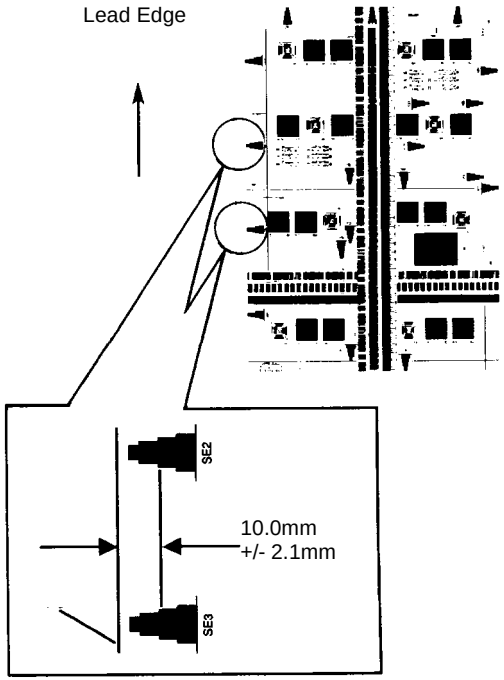

Figure 1 Checking IIT Side Edge Registration

4. If the value is not within the specified range, perform the Adjustment:

Adjustment

1. Enter the Diagnostic mode (UI Diagnostic (CSE) Mode).
2. Select the **Adjustment Tab**.
3. Select the dC131 **NVM Read/Write** location [715-053].
   Change the value.
   - 1 increment = 0.075mm
   - increasing the value = The image moves IN.
   - decreasing the value = The image moves OUT.
4. Repeat Check and Adjustment until the Side Edge measurement is within the specified range.

ADJ 6.5 IIT Vertical/Horizontal Reduce/Enlarge - TBD - see note

Parts List on PL 1.1

Purpose

To correct the horizontal (fast scan)/vertical (slow scan) magnification ratio for a 100% copy.

Check

CAUTION

Perform this procedure only if absolutely required; changing IIT magnification may adversely affect resolution due to ASIC shift, and may cause a color shift.

1. Place the Geometric Test Pattern (82E8220) on the Platen Glass and make a copy using the following copy mode settings:
   - Copy Mode: Black
   - Document Type: Text/Photo
   - Paper: 11 x17 in. or A3
   - Magnification: 100%
   - No. of Copies: 2
2. Check the 2nd copy for the following:
3. **Check horizontal magnification** (Figure 1):

   Measure the 200mm line running from near LE1 to near LE3. Check that the dimension is 200mm ±1mm.

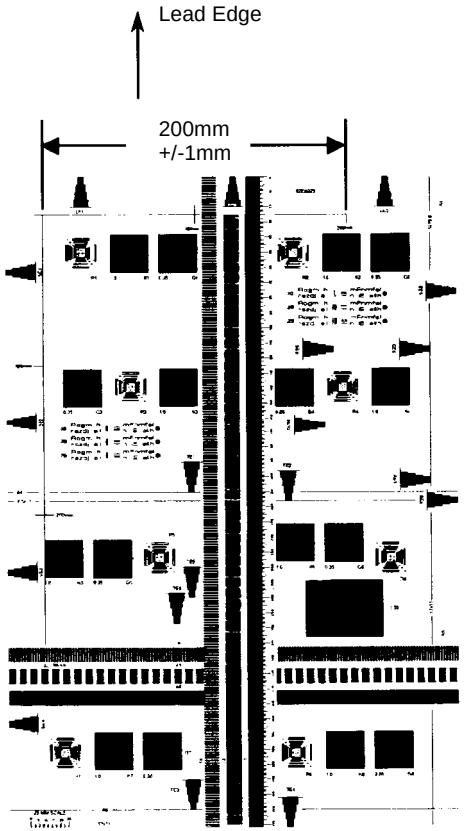

Figure 1 Checking Horizontal Magnification

4. **Check vertical magnification** (Figure 2):

   Measure the 300mm line running from near LE1 to the trail edge of the 1.8lp ladder. Check that the dimension is 300mm ±1mm.

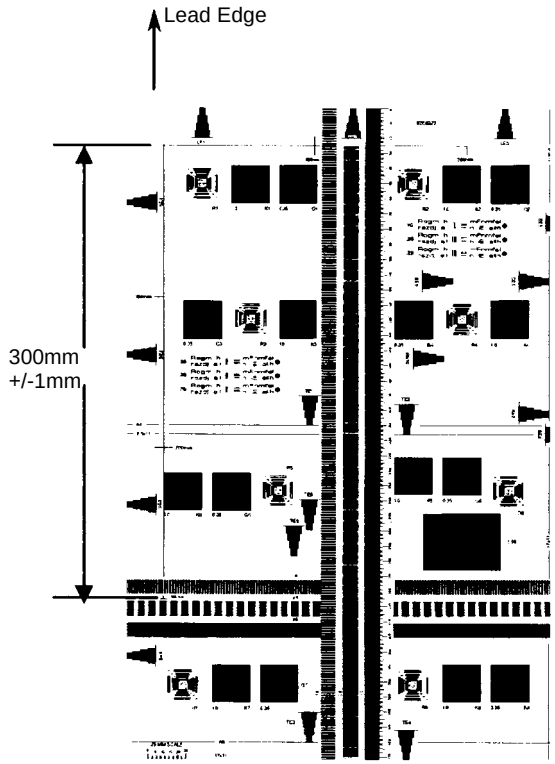

Figure 2 Checking Vertical Magnification

5. If either measurement is not with in specification, perform the Adjustment.

Adjustment

1. Enter the Diagnostic mode (UI Diagnostic (CSE) Mode).
2. **Horizontal Magnification Adjustment** - TBD - the NVM value listed returns “an invalid ID was entered”
   - Select the dC131 **NVM Read/Write** location [715-702].
   - Each bit represents 0.1% change:
     Increase the value to increase magnification
     Decrease the value to decrease magnification
3. **Vertical Magnification Adjustment**
   - Select the dC131 **NVM Read/Write** location [715-051]. - TBD - the NVM value listed returns “an invalid ID was entered”
   - Each bit represents 0.1% change:
     Increase the value to increase magnification
     Decrease the value to decrease magnification
4. Repeat Check and Adjustment until the Horizontal/Vertical magnification measurements are within specification.

ADJ 6.6 IIT Calibration

Purpose

The purpose of this procedure is to calibrate the optics in the IIT for optimal performance.

There are two adjustments included in the IIT Calibration Adjustment.

- **White Reference Adjustment** - Calculates and sets the White Reference Correction Coefficient.
- **CCD Calibration** - Corrects the IIT sensitivity dispersion.

Adjustment

CAUTION

*Do not select the **Optical Axis Calibration** button unless the Lens Kit was replaced.*

1. If the CCD Lens Assembly (PL 1.2) was replaced, perform ADJ 6.1 first.
2. Clean the Optics:
   a. Switch off the power and allow the Exposure Lamp to cool off.
   b. Using the optical Cleaning Cloth, clean the front and rear of the Document Glass, Document Cover, White Reference Strip, Reflector, and Mirror.
   c. Clean the Exposure Lamp with a clean cloth and Film Remover.
   d. Clean the Lens with Lens and Mirror Cleaner and lint free cloth.
3. Enter the UI Diagnostic (CSE) Mode.
4. Select the **Adjustment** tab.
5. Select **dC131 NVM Read/Write**.
6. Confirm the following NVM Read/Write (dC131) location **715-518 Scanner Paper Code** is set to **5** for **XC** (Digital Color Xpressions) or **6** for **XE** (Color Tech+). If NVM location 715-518 is incorrect, change to the correct value.

   ***NOTE:** If the value displayed is something other than 5, 6, or 1, then the scanner NVM is corrupt and needs to be initialized. Go into UI diagnostics, Adjustment tab. Select NVM Initialization, Copier, Scanner, and initialize.*

7. Exit **dC131**.
8. Select **dC945 IIT Calibration** from the UI.
9. Select the **White Reference Platen** button.
10. Place 1 sheet of 11x17/A3 Color Expressions (or equivalent 98 brilliance paper) on the platen.
11. Press **Start**.
12. The message “IIT Calibration in Process” will appear on the UI screen.
13. When the “IIT Calibration Completed” message appears, select the **White Reference DADH** button.
14. Remove the sheet of paper from the platen and place 1 sheet of 11x17/A3 Color Expressions (or equivalent 98 brilliance paper) in the DADF.
15. Press **Start**.
16. The meassage “IIT Calibration in Process” will appear on the UI screen.
17. When the calibration is complete and entires appear in the Results box, select the **CCD/ LED Calibration** button
18. Remove the paper from the exit tray of the DADF and place the Test Pattern 82E13120 on the platen with the LE (Lead Edge) on the left.
19. Press **Start**.
20. The meassage “IIT Calibration in Process” will appear on the UI screen.
21. When the calibration is complete, the obtained data is displayed in the Results box.
    a. Ensure that the Results box shows a green check mark in the left most section of the box indicating that the results are OK.
    b. If the Results box does not show OK (if a red X is shown in the left most area of the box), return to step 2 and repeat this procedure. If, after repeating the procedure, the result box still does show OK replace the CCD or optics as required (PL 1.2).

ADJ 6.7 dC 608 Document Feeder Registration (Size Detection Auto-Correction) - TBD see note

Parts List on PL 1.1

Purpose

To automatically adjust the original size during DADF scan to the desired original size.

Proceed with this adjustment only after the following operations/events.

- The DADF Assy. is replaced.
- An abnormality is detected after replacing the Reg. Roll, Feed Roll and Retard Roll.
- A size detection error occurs.

Overview

Using the DADF, continuously scan 3 originals. The NVM Data is automatically corrected based on the comparison between the Slow Scan Length and the reference value detected by the DADF. The NVM Data that is corrected is "Size Correction Value for Slow Scan Originals in Non CVT Mode" (Chain Link No. 710-552).

This operation cannot be terminated (or aborted) halfway through the process and has to be completed from start to finish regardless of any abnormalities that occur

Adjustment

1. Enter the **UI Diagnostic Mode (UI Diagnostic (CSE) Mode)**.
2. Select the **Adjustment Tab** > **DC608 Document Feeder Registration** on the **Maintenance / Diagnostics** screen.
3. Set 3 A4/LTR- size documents in the DADF.
4. When the **Start** button is pressed, the DADF starts pulling in the document and the correction value is calculated. At this point, the message "In progress" appears.
5. The applicable NVM Data will then be updated. After the operation, the UI screen will be displayed.

   However, if this operation results in an NG, the NVM will not be updated and a message indicating that an NG has occurred will be displayed.
6. The operation ends when the **Stop** button is pressed.

Status Confirmation Specifications

You may check the following status by using NVM Read after operations. - TBD - the NVM value listed returns “an invalid ID was entered”

Table 1 NVM Data

Chain-Link	Display Data Name	Reference
710-552	Size Correction Value for Slow Scan Originals in Non CVT Mode	Setting Range=144 to 256 (equivalent to 56 increments 10mm] ← 0.18mm/ increment) Initial Value: 200 (However, there is an adjusted value set against the initial value when shipped.)

NOTE: *If it is still NG after the adjustment, repeat the procedure.*

ADJ 7.1 Tray 5 (MSI) Guide Adjustment

Purpose

This procedure calibrates the paper size detection circuits for Tray 5 (MSI). It should be performed when the MSI size sensor is replaced or a size detection error occurs

Adjustment

1. Enter the UI Diagnostic (CSE) Mode.
2. Select the **Adjustments Tab**.
3. Select **dc740 MSI Side Guide Adjustment**.
4. Push the paper guides to their minimum width.
5. Select the **Minimum** button, then select **Read Width**. When the machine software has read the width of the Paper Guides, select **Write Width**. This measurement will then be written into NVM.
6. Push the paper guides to their maximum width.
7. Select the **Maximum** button, then select **Read Width**. When the machine software has read the width of the Paper Guides, select **Write Width**. This measurement will then be written into NVM.
8. Place a sheet of paper in Tray 5 and select either the **Maximum** or **Minimum** button then select **Read Width**. Check to ensure accurate reading of the paper width. If the value is incorrect, refer to BSD 7.5 - Tray 5 (MSI) Paper Size Sensing to troubleshoot the problem.

ADJ 9.1 Max Setup

Purpose

Max Set Up measures performance of the automatic process control. Process Control adjusts Bias voltage, Laser Diode output, toner concentration (TC) and BCR voltage automatically to maintain density. It uses the ATC Sensor and Pixel count to the determine dispense time needed to attain the target TC.

Adjustment

Max Setup consists of several separate adjustments that may be performed sequentially or individually as depending on the situation being resolved. There are inter-dependencies between adjustments, hence, they should only be performed as directed in documentation.

IOT Baseline

1. ADJ 9.5, Manual TRC Adjust. TRC should be set to the default (0) value before attempting to check or adjust image quality.
2. ADJ 9.7, ProCon On/Off Print Check. This procedure measures performance of the automatic process control but does not directly affect it. It can be used as a troubleshooting tool but not as a adjustment to correct Image Quality. Make sure that you use 11” x 17” or A3 paper for this adjustment.

IOT Situational

The following procedures are performed to address specific customer complaints or requirements, or when directed following component replacement.

1. ADJ 9.4, Adjust Toner Density. This procedure does not change any parameters; it performs a one-time change to TC. It is important that the problem that caused the low or high TC condition is resolved before performing this adjustment.
2. ADJ 9.5, Manual TRC Adjust. Perform this adjustment only to correct a strong customer complaint. Altering the setpoints will affect both Print and Copy modes. Also, there is quite a bit of overlap among the low, medium, and high densities. For these reasons, it is recommended that this procedure not be used unless absolutely necessary.

IIT Situational

The following procedures are performed to address specific customer complaints or requirements, or when directed following component replacement.

1. ADJ 6.6, CCD Calibration
2. ADJ 9.6, Copy Mode Color Balance
3. ADJ 9.5, Manual TRC Adjust. Perform this adjustment only to correct a strong customer complaint. Altering the setpoints will affect both Print and Copy modes. Also, there is quite a bit of overlap among the low, medium, and high densities. For these reasons, it is recommended that this procedure not be used unless absolutely necessary.

ADJ 9.2 High-Altitude Charge Correction - TBD - see note

Purpose

If the machine is installed at an altitude of over 1000m, it is necessary to adjust the BCR High Altitude Correction Offset.

NOTE:

If this adjustment is not performed, the charge voltage VH will be higher, causing possible image quality defects.

Adjustment

1. Enter the Diagnostic Mode (UI Diagnostic (CSE) Mode).
2. Select the **Adjustment Tab**.
3. Select dC131 **NVM Read/Write**.
4. In accordance with the altitude of the installation site, enter the appropriate value from Table 1 into the NVM locations listed in Table 2. TBD - The NVM values can be read and written to, but the limits shown in the machine are far outside of the Min/Max values in the table (machine limits are -1024-/+1023) and the NVM name is shown as “Unknown”.

Table 1 Altitude List

Altitude	Value
0m~1000m	0
1001m~2000m	-16
2001m~3000m	-32
3001m~	-48

Table 2 NVM List

NVM location	Name	Min.	Initial	Max
755-280	BCR High Altitude Correction Offset (Y)	-80	0	20
755-281	BCR High Altitude Correction Offset (M)	-80	0	20
755-282	BCR High Altitude Correction Offset (C)	-80	0	20
755-283	BCR High Altitude Correction Offset (K)	-80	0	20

5. After the adjustment, check that there is no copy quality defect.

ADJ 9.3 DC949 ATC Developer Setup

Purpose

Immediately after the replacement of a Developer Housing with known toner density, this sets the ATC Target Value by having the ATC Sensor measure the toner density of the developer. This can also work as the check function of the ATC Sensor.

Adjustment

1. Enter the Diagnostic Mode (UI Diagnostic (CSE) Mode).
2. Select the **Adjustments Tab**.
3. Select **DC949 ATC Developer Setup**.
4. Select the **Measure All** button. When the measurement process completes, check the table. If any colors are showing a Measurement Result that is not OK. Proceed with step 5. If all colors are OK, the process is complete.
5. Under the heading ATC Calibration, click in the box to select the color(s) to be set up.
6. Select the **Calibrate** button.
7. When the routine completes, the screen will display:
   - ATC Measurement Value
   - ATC Target Value
   - Measurement Result - If this is NG, check that the ATC sensor is connected and undamaged.
   - Setup Result - If this is NG, check that the ATC sensor is connected and undamaged.
8. Refer to the RAPs in Chain 392 to troubleshoot ATC problems .

ADJ 9.4 DC991 Tone Up/Tone Down

Purpose

This procedure manually increases or decreases toner concentration (TC). It is used when a xerographic problem or out-of-toner condition has prevented process control from maintaining the TC target value.

This procedure does not change any parameters; it performs a one-time change to TC. It is important that the problem that caused the low or high TC condition is resolved before performing this adjustment.

Adjustment

1. Enter the Diagnostic Mode (UI Diagnostic (CSE) Mode).
2. Select the **Adjustments Tab**.
3. Select **DC991 Tone Up/Tone Down**.
4. Select the desired color to be corrected.

   Adjust one color at a time.

   If TC is too high, the amount of toner used to create the patch is too low. Use a positive Number of Sheets to increase the amount of toner in the Developer Housing. If TC is too low, use a negative number. Negative numbers will print solid area coverage in order to tone down the developer.
5. Press **Start** button to begin Toner Density Adjustment.
6. After the adjustment ends, the TC Measured value will be displayed. Repeat steps 4 and 5 until all TC Measurements are within +/-30 of the TC Target

ADJ 9.5 DC924 TRC Manual Adjustment

Purpose

CAUTION

Perform this adjustment only to correct a strong customer complaint. Altering the setpoints will affect both Print and Copy modes. Also, there is quite a bit of overlap among the low, medium, and high densities. For these reasons, it is recommended that this procedure not be used unless absolutely necessary.

To adjust image quality (TRC) to meet the user's preference, by increasing or decreasing the center value of gradation correction for each (YMCK) color, in low density, medium density, and high density ranges.

Adjustment

1. Obtain a representative full-color original from the customer. Make 2 copies from the platen glass.
2. Enter the Diagnostic Mode (UI Diagnostic (CSE) Mode).
3. Select the **Adjustments Tab**.
4. Select **DC924 TRC Manual Adjustment**.
5. Press **Read Values**.
6. Increase or decrease the value using the **Up/Down** buttons.
7. Press **Write Value**.
8. Exit Diagnostic Mode, then switch the machine power off then on.
9. Make 2 prints or copies. Ask the customer if the desired result is achieved.
10. Repeat steps 4 through 8 until the customer is satisfied with the image quality.

ADJ 9.6 DC919 Color Balance Adjustment

Purpose

To perform fine adjustment of the center value of the low density/medium density/high density output balance for each color for copy images.

- This adjustment is only applicable to the copy function.
- Adjustment is carried out in the TRC section of the IIT/IPS according to the set value.
- Perform this adjustment only when requested by the customer. The center of color adjustment in Customer Mode will be changed by this setup.

Adjustment

1. Obtain a representative full-color original from the customer. Make 2 copies from the platen glass.
2. Enter the Diagnostic Mode (UI Diagnostic (CSE) Mode).
3. Select the **Adjustments Tab**.
4. Select **DC919 Color Balance Adjustment**.
5. Press **Read Values**.
6. Increase or decrease the value using the **Up/Down** buttons.
7. Press **Write Value**.
8. Exit Diagnostic Mode, then switch the machine power off then on.
9. Make 2 prints or copies. Ask the customer if the desired result is achieved.
10. Repeat steps 4 through 8 until the customer is satisfied with the image quality.

ADJ 9.7 DC940 ProCon On/Off Print Check

Purpose

This procedure performs a Minisetup, outputs a printed test pattern for visual analysis, and prints a Job End patch. Selected process control NVM values are displayed, and a check for hidden process-control-related faults is performed.

There are 2 modes in this procedure:

- Procon On mode - the routine is run with ATC/ADC correction per the ProCon lookup table (LUT) and customer mode settings.
- Procon Off mode: - the routine is run with ATC/ADC/LUT bypassed, using the default settings for potential.

Check

1. Ensure that there is 8 1/2” x 11” or A4 LEF paper in Tray 1.
2. Ensure that TRC (ADJ 9.5) and Color Balance (ADJ 9.6) values are set at midpoint.
3. Enter the **UI Diagnostic Mode** (UI Diagnostic (CSE) Mode).
4. Select the **Adjustments** tab.
5. Select **DC940 ProCon On/Off Print**.

NOTE: *Disregard any NG readings that are displayed when you first enter the routine - the data are only valid after* ***Print*** *has been selected.*

6. Select the **Process Control On** radio button if it is not already selected.
7. Press the **Print** button on the Control Panel. Minisetup will be executed in 4C mode. 1 sheet of the built-in test pattern **Pcon PG 200C** will be printed and the job end patch created.
8. Check the ProCon Status and Judgement tables for any failures. If NG is displayed, perform the Adjustment.
9. Check the **ProCon On/Off Values** window. If any of the following values do not meet the listed criteria, perform the Adjustment:
   - **ADC High** (relevant to mid/high density reproduction) is within +/- 25 bits of **ADC Target High** (+/- 50 bits for K).
   - **ADC Low** (relevant to highlight density reproduction) is within +/- 25 bits of **ADC Target Low** (+/- 50 bits for K).
   - **ATC Average** is within +/- 25 bits of **ATC Target**.
10. Examine the printed test pattern (Figure 1). Compare the output to the Color Test Pattern. Check the density and color shift of the medium/high density areas, and the reproduced density and color shift of the highlights. If a problem is detected, perform the Adjustment.

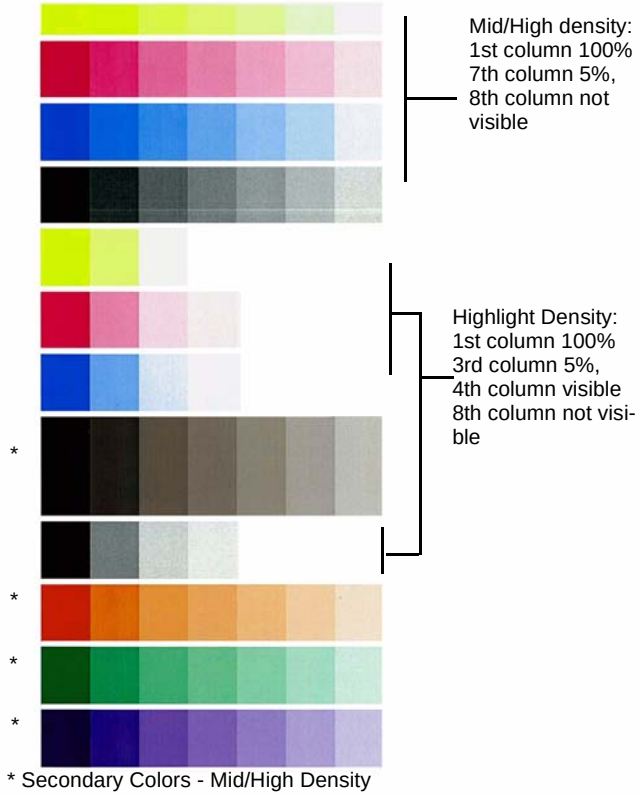

Figure 1 Color Test Pattern

Adjustment

1. If NG is displayed, carry out the following failure correction as appropriate, then repeat the Check.
   - For **ADC Shutter Open** failures go to the 392-649 RAP.
   - For **ADC Shutter Closed** failures go to the 392-650 RAP.
   - For **ADC Sensor** failures go to the 392-651 RAP.
   - For **ADC Patch** failures go to the 392-670 (Y), 392-671 (M), 392-672 (C), or 392-673 (K) RAPs.
   - For **ATC Average** failures go to the 392-670 (Y), 392-666 (M), 392-667 (C), or 392-668 (K) RAPs.
   - For **ATC Amplitude** failures go to the 392-657 (Y), 392-658 (M), 392-659 (C), or 392-660 (K) RAPs.
   - For **Temperature** failures go to the 392-661RAP.
   - For **Humidity** failures go to the 392-662 RAP.

- For **ADC Minisetup** failures go to the 392-670 (Y), 392-671 (M), 392-672 (C), or 392-673 (K) RAPs.

2. If the **ATC Measurement Average** in step 8 of the Check was out of spec, perform ADJ 9.3, repeat the Check. If the problem remains, continue the Adjustment from this point.
3. Record the values in the **ProCon On/Off Values** window.
4. Select the **Process Control Off** radio button, then select **Print**. Minisetup will be executed in 4C mode. 1 sheet of the built-in test pattern **Pcon PG 200C** will be printed and the job end patch created.

   ProCon Off switches off the Grid Voltage Control, and ADC Gradation Control:
   - Grid Voltage Control Off: For medium/high density problems, this allows you to differentiate between developing/transfer problems in IOT elements status and Grid Voltage Control problems due to Procon ADC.
   - ADC Gradation Control: When reproduced highlights are poor, this allows you to differentiate between problems with the IOT itself and problems with the ADC Gradation Adjustment.
5. Compare the output of the ProCon On and ProCon Off prints. Evaluate according to one of the following Problem Statements:
   a. both ProCon On and ProCon Off prints are unacceptable
      - For poor Highlight reproduction, perform ADJ 9.4 (Tone-up/Tone-down).
      - If the problem involves a single color, it may be the Developer and/or power supplies; Photoreceptor/BCR and/or power supplies. Repair or replace as required.
      - If the problem involves a all colors, check the 2nd BTR, its power supply, and the Transfer Belt.

   b. ProCon Off print is OK but ProCon On print is unacceptable
      - Replace the MOB/ ADC Sensor Assembly (PL 18.2).

Table 1 Normal ranges

Screen Display Name	Normal Range
ADC Target High	not adjusted
ADC High	ADC Target H +/- 30
ADC Min 1	blank
ADC Min 2	blank
ADC Target Low	not adjusted
ADC Low	ADC Target L +/- 30
Charge Output	740 ~ 770
L D Output	150 ~ 1023
Bias Output	500 ~ 600
ATC Target	480 ~ 620
ATC Average	ATC Target +/- 25 (when toner is empty state: ATC Target + 100)
ATC Amplitude	50 ~ 500
Temperature	5 ~ 45
Humidity	5 ~ 90

ADJ 9.8 Registration Measurement Cycle - TBD see note

Purpose

TBD - the procedure as written below bears little resemblence to the screens or the procedure dC671 as seen in the screens in the machine. Need SME input to determine how to rewrite/correct the below process to reflect machine process.

To measure the color registration and display the status by indicating OK/NG.

This cycle performs the color Registration measurement that includes the detection of AC component to determine the condition of AC control (Drum Drive, Belt Drive, etc.), which is one of the color Registration components.

NOTE: *Correction is not performed.*

- Performs Registration measurement to determine the condition of the AC control.
- Checks that the Belt control etc. are operating normally.
- Measures/displays the amount of color shift relative to Black in the Fast Scan/Slow Scan direction.
- Displays the result of comparison with the target value as OK/NG.

Procedure

1. Enter UI diagnostics (UI Diagnostic (CSE) Mode) and select **Registration**.
2. Select the **Adjustments Tab**.
3. Select **DC671 Measurement Cycle**.
4. Press **Start**. **OK** or **NG** will be displayed in the **Result** column.

Table 1 Registration Measurement Results

Displayed data name	Displayed range	Target value
Shift length of lateral DC (IN)	-500~+500	-50 or more, +50 or less
Shift length of process DC (IN)	-500~+500	-126 or more, +126 or less
Shift length of lateral AC (IN)	-500~+500	+ 175 or less
Shift length of process AC (IN)	-500~+500	+ 313 or less
Shift length of lateral DC (OUT)	-500~+500	-50 or more, +50 or less
Shift length of process DC (OUT)	-500~+500	-126 or more, +126 or less
Shift length of lateral AC (OUT)	-500~+500	+ 175 or less
Shift length of process AC (OUT)	-500~+500	+ 313 or less
Number of detection of patterns (IN)	0~12	More than the setting value of NVM 760-047
Number of detection of turns (OUT)	0~12	

If NG is displayed:

1. Go to ADJ 9.9 and perform the procedure. Repeat a second time if the problem persists. If NG is still present, go to step 2
2. Go to [Printing CSE Reports]. Press the **Machine Status** button on the Control Panel. The **Machine Status** screen opens.
3. Select the **Billing Meter/Print Report** tab.
4. Select **Print Report/List**.
5. Press the **CE** button. The **CE** screen opens
6. Press the **Failure Report** button.
7. Press the **Start** button. The report is printed.
8. Examine the Failure report to see if there are any Chain **089** fault codes. These are only on the Failure report and are printed on page 3. Troubleshoot these codes
9. If the problem persists after clearing any Chain 089 faults, refer to the corresponding RAP and correct the problem. If the result is NG for both AC/DC, fix the AC problem first.

ADJ 9.9 Registration Control Setup Cycle - TBD see note

Purpose

TBD - the procedure as written below is different from the screens or the procedure dC675 **as seen in the screens in the machine. Need SME input to determine how to rewrite/correct the below process to reflect machine process.**

To set the most appropriate Registration Control correction value for skew etc. at setup, or after replacing any of the following parts:

- ROS replacement
- 2nd BTR replacement
- Transfer Belt replacement
  IBT Cleaner replacement
- IBT Module replacement

The Setup Cycle is made up of the following 2 functions.

Function: Performed right after assembling or during field installation or when replacing a key part. Also, this is a Registration Control Full Cycle that can be performed in the Diagnostic. mode right after the NVM is initialized. Executing this function corrects the Color Registration into the predefined range. The corrected shift amount for each color is saved in the NVM and it is displayed at normal completion.

Function: On entering a setup cycle, the IOT does not start. The Registration Control shift correction amount is displayed automatically on the UI screen and is used as a tool for determining the cause when a failure occurs.

Procedure

1. Enter UI diagnostics (UI Diagnostic (CSE) Mode) and select **Registration**.
2. Select the **Adjustments Tab**.
3. Select **DC675 Registration Control Setup**.
4. Select **Start**. The shift amount for each color is corrected automatically.
5. Perform ADJ 9.8.

ADJ 9.10 IOT Lead Edge/Side Edge Registration - TBD see note

Purpose

TBD issues - need SME input to resolve these:

1) Figure 1 does not look like the test pattern that is printed. The grid on the printed pattern is much larger and there are no angled lines or other marks. Is the correct pattern being printed?

2) The Adjustment section of this procedure could not be verified. Little if anything listed in the Adjustment section seems to work as indicated. COuld not change the grid pattern using the procedure.

The purpose is to adjust the position of the printed image on the page by controlling where the ROS writes the image. This is done by changing the value of the Lead Edge Registration and Side Edge Registration in UI Diagnostics. This adjustment must be completed prior to the IIT Lead Edge/Side Edge Registration, and the DADF Lead Edge Registration.

Each tray must be adjusted separately for:

- Lead Edge registration for side 1
- Lead Edge registration for side 2
- Side Edge registration for side 1
- Side Edge registration for side 2

Specification

The specifications for Lead Edge and Side Edge are shown in the table below.

Table 1 Specification

Item	Simplex	Duplex	Tray 5 / Bypass
Lead Edge	10 +/- 1.5mm	10+/- 1.5mm	10+/- 1.5mm
Side Edge	8.5+/- 1.7mm	8.5 +/-1.7mm	8.5+/- 2.9mm

Checking Side 1 Lead Edge Registration

1. Load Trays 1 and 2, and the Tray 5 / Bypass, with 11 x 17 / A3 Bond/Plain paper. Load Trays 3, and 4 with 8 1/2 x 11 / A4 Bond/Plain paper.
2. The routine automatically selects the appropriate NVM location to set, based on the Paper Type setting for the trays.
3. Enter UI diagnostics (UI Diagnostic (CSE) Mode) and select the **Adjustments** tab.
4. Select **DC129 Paper Registration**.
5. Make the following selections:
   a. Select **B/W**, if not already selected.
   b. Select **Side 1**, if not already selected.
   c. Select 5 for **Print Count**.
   d. Select the **Paper Tray** button and select **Tray 1**, from the drop down menu if not already selected.
6. Click **Print**.
7. Remove the prints one at a time from the center output tray and **Flip each one Right to Left**, to position it as shown in Figure 1 (lead edge to the left).
8. Label each printed sheet with the number of the print (1 through 5), the words “Tray 1,” and “Side 1,” and the location of the Lead Edge of each sheet.
9. Take the third print and measure from the lead edge to point A (as shown on Figure 1). Point A is at the intersection of the 7th line from the side edge and the first line from the lead edge.
10. If the measured value is not 10 +/- 1.5mm, perform the **Adjustment**. If the Check is OK, repeat steps 5 through 8 for Trays 2 - 5.
11. After all trays are set, proceed to **Checking Side 2 Lead Edge Registration**.

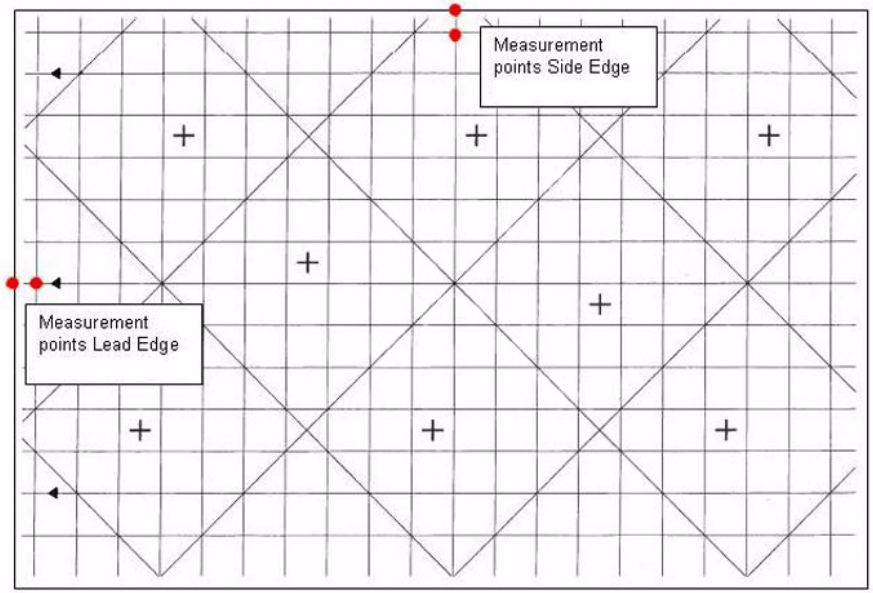

Figure 1 Test Pattern Measurement Points

Checking Side 2 Lead Edge Registration

NOTE: *The grid pattern for side 1 does not align with the side 2 grid pattern; do not attempt to set registration by aligning the grids.*

1. Make the following selections:
   a. Select **Side 2**.
   b. Select 5 for **Print Count**, if not already selected.
   c. Select the **Paper Tray** button and select **Tray 1**, from the drop down menu if not already selected.
2. Click **Print**.

NOTE: *"Side 2" will be delivered face-down in the tray, with the Lead edge to the right. Flip each one Right to Left to position it as shown in Figure 1 (lead edge to the left).*

3. Label each printed sheet with the number of the print (1 through 5), the words "Tray 1" and "Side 2," and the location of the Lead Edge of each sheet.
4. Take the third print and measure from the lead edge to point A (as shown on Figure 1). Point A is at the intersection of the 7th line from the side edge and the first line from the lead edge.
5. If the measured value is not 10 +/- 1.5mm, perform the **Adjustment**. If the Check is OK, repeat steps 2 through 4 for Trays 2 - 5.
6. After all trays are set, proceed to **Checking Side 1 Side Edge Registration**.

Checking Side 1 Side Edge Registration

1. Make the following selections:
   a. Select **Side 1**.
   b. Select 5 for **Print Count**, if not already selected.
   c. Select the **Paper Tray** button and select **Tray 1**, from the drop down menu if not already selected.
2. Click **Print**.
3. Label each printed sheet with the number of the print (1 through 5), the words "Tray 1" and "Side 1," and the location of the Lead Edge of each sheet.
4. Take the third print and measure from the lead edge to point B1 (as shown on Figure 1). Point B1 is at the intersection of the 5th line from the side edge and the first line from the lead edge.
5. If the measured value is not 8.5 +/- 1.7mm, perform the **Adjustment**. If the Check is OK, repeat steps 2 through 4 for Trays 2 - 5 (spec for Tray 5 is 8.5+/- 2.9mm).
6. After all trays are set, proceed to **Checking Side 2 Side Edge Registration**.

Checking Side 2 Side Edge Registration

NOTE: *The grid pattern for side 1 does not align with the side 2 grid pattern; do not attempt to set registration by aligning the grids.*

1. Make the following selections:
   a. Select **Side 2**.
   b. Select 5 for **Print Count**, if not already selected.
   c. Select the **Paper Tray** button and select **Tray 1**, from the drop down menu if not already selected.
2. Click **Print**.

NOTE: *"Side 2" will be delivered face-down in the tray, with the Lead edge to the right and the side edge to be checked towards you.*

3. Label each printed sheet with the number of the print (1 through 5), the words "Tray 1" and "Side 2," and the location of the Lead Edge of each sheet.
4. Take the third print and measure from the lead edge to point B1 (as shown on Figure 1). Point B1 is at the intersection of the 5th line from the side edge and the first line from the lead edge.
5. If the measured value is not 8.5 +/- 1.7mm, perform the **Adjustment**. If the Check is OK, repeat steps 2 through 4 for Trays 2 - 5 (spec for Tray 5 is 8.5+/- 2.9mm).

Adjustment - TBD - see notes at beginning of this procedure

1. Determine the distance and direction the line needs to move:
   - Lead Reg. Adjustment Step: 0.100 mm/step
     Side Reg. Adjustment Step: 0.106 mm/step
   - **With the print in the orientation shown in Figure 1**:
     The **Up** arrow moves the grid to the right; the **Down** arrow moves the grid to the left.
     The **Right** arrow moves the grid down; the **Left** arrow moves the grid up.
2. Enter the correction and press **Adjust** one time.
3. Click **Print**.
4. Repeat the Check(s) and Adjustment until registration is within specification.

ADJ 9.11 Edge Erase Value Adjustment

Purpose

To correct both (Rear/Front) sides and Lead Edge erase values of the image.

NOTE: *The IOT Lead Edge/Side Edge Registration must be adjusted.*

Check

1. Specify a Tray loaded with paper. Make a black copy without using any originals and leaving the Platen Cover open.
2. Check that the white area at the lead edge is 4mm wide and those at the both side edges and the trail edge are 2mm wide.

Adjustment

1. Enter the diagnostic mode (UI Diagnostic (CSE) Mode).
2. Select the **Adjustments Tab**.
3. Select dC131 **NVM Read/Write**.
4. Adjust the NVMs until the measured values are 4mm at the lead edge and 2mm at the sides and the end.

   Increasing the set value leads to a larger erase amount.

Table 1 NVM List

NVM location	Name	Min.	Initial	Max	Step
767-091	LeadEraseMargin	40	40	255	0.1mm
767-092	SideEraseMargin	20	20	255	0.1mm
767-093	TailEraseMargin	20	20	255	0.1mm

5. Repeat the Check and Adjustment until the parameter is within specification.

ADJ 9.12 Registration Control Sensor Check

Purpose

To check if the misregistration detection system from the Registration Control (MOB Sensor) is operating normally.

This is a self-diagnosis cycle to check that the detection system can operate properly. To verify that the detection result is "Zero Misregistration", the color shift amount is detected using CUI patch (Cyan monochromaticity) and the misregistration detected in the MOB sensor is displayed on the UI screen.

In addition, this detected shift amount result is compared with the target value to perform OK/NG judgment and the result is also displayed. **Correction is not performed**.

Procedure

1. Enter UI diagnostics (UI Diagnostic (CSE) Mode).
2. From the **Maintenance/Diagnostics** screen, select the **Adjustments Tab**.
3. Select dC673 **Registration Control Sensor Check**.
4. Select **Start**.

   "OK" or "NG" will be displayed in the "Value" column.
5. If the Measured Value is more than 10 above the Target Value, "NG" will be displayed.

   When "NG", check that Cyan is being printed and replace the MOB Sensor Assembly.

   If Cyan is not printed, repair the Marking accessories that include the Developer.

   If Cyan is printed, Pattern No. 5 - “C Patch Pattern” in dC612 can be used to perform checking.

ADJ 9.15 2nd Transfer Voltage Offset Adjustment - TBD see note

Purpose

TBD None of the procedure listed below is remotely like javelin. Need SME input

To adjust the secondary transfer voltage to accommodate the various types of paper that are available in the market.

Procedure

Table 1 The Relationship Between the Classification on the UI and the Paper Type (Factory Settings)

UI Classification	Paper Type
Bond Paper	Plain A
Plain (Tray Default Setting)	Plain B
Recycled	Plain C
Reload	Plain B
Heavyweight	Heavyweight A
Heavyweight (Reload)	Heavyweight A (Reload)
Extra Heavyweight	Extra Heavyweight A
Extra Heavyweight (Reload)	Extra Heavyweight A (Reload)
Custom Paper 1 Image Quality	Plain B

1. Load the paper to be adjusted into the paper tray (11x17 is recommended) and change the "**Paper Type Settings**" to match the paper.
2. Enter UI diagnostics (UI Diagnostic (CSE) Mode).
3. Select [**MAX Setup**] on the “Maintenance/Diagnostics” screen.
4. Select [**2nd Transfer Voltage Offset**] on the [**Max Setup**] screen.
5. Select **[Paper Supply]** and select the tray containing the paper to be adjusted.
6. Select **[Paper Type]** and select the paper type that was set in Step 1.
7. Select **[Print]** to output the Test Pattern (Figure 1).

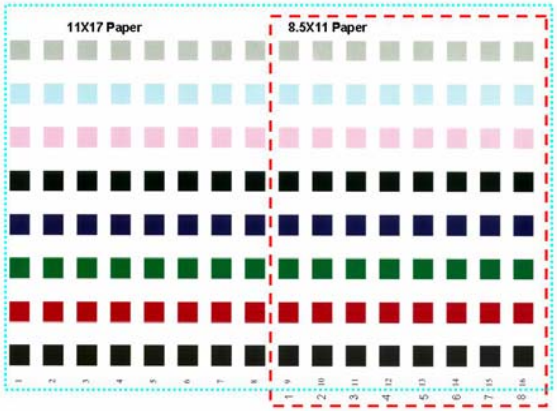

Figure 1 Test Pattern 124

NOTE: *The Test Pattern is meant to be printed on 11x17”/A3 paper; portions of the pattern may be missing when printed on other sizes. LTR/ A4 LEF only shows the latter half of the pattern; although the patch number at the paper lead edge is "9", the transfer output will be printed as "1".*

8. Select what you would consider as the best value from the columns (1~16) on the Test Pattern. The selection criteria are:
   a. Whether there are any white spots in the K color patch (if there are, it indicates excessive voltage)
   b. Whether the mixed K looks bluish (if it is, it indicates insufficient voltage)
   c. Whether the halftone granularity is good (if it is bad, it indicates excessive voltage)
9. Select **[Adjust]**.
10. Select **Close** to end.

ADJ 12.1 Finisher LX Hole Punch Position

Purpose

This procedure sets the distance from the trail edge of the punched sheet to the center of the punched holes.

NOTE: *This adjustment is normally performed by the customer, via Admin mode.*

Check

1. Enter UI diagnostics (UI Diagnostic (CSE) Mode) and select **Finisher Adjustment** (on second page).
2. Select **Adjust Punch Position/Booklet Fold Position**.
3. Select choice #1 or #2, depending on the paper size, then select **Change Settings**.
4. Select **Sample Printout**.
5. Select the paper tray to be adjusted, then press **Start**. The selection must match the choice made above.
6. Measure the distance between the trail edge of the sheet and the center of the bottom hole. If the distance is not 10 +/- 3 mm, perform the Adjustment

Adjustment

1. Use the buttons on the UI to move the holes left or right. When the computed correction is made, select **Adjust**.
2. Repeat the Check and Adjustment until the measurement is correct

ADJ 12.2 Finisher LX Booklet Crease/Staple Position

Purpose

This procedure centers the crease and staple positions in the booklet.

NOTE: *This adjustment is normally performed by the customer, via Admin mode.*

Check

1. Enter UI diagnostics (UI Diagnostic (CSE) Mode) and select **Finisher Adjustment** (on second page).
2. Select **Adjust Punch Position/Booklet Fold Position**.
3. Select choice #3 or #4, depending on the paper size, then select **Change Settings**.
4. Select **Sample Printout**.
5. Select a paper tray with the appropriate paper, then press **Start**. The selection must match the choice made above.
6. Measure the distance between the crease and the edges of the sheet (“A” and “B” on Figure 1). The measurements should be equal, +/- 3.5 mm for A4/Letter size paper; 4 mm for all other sizes.

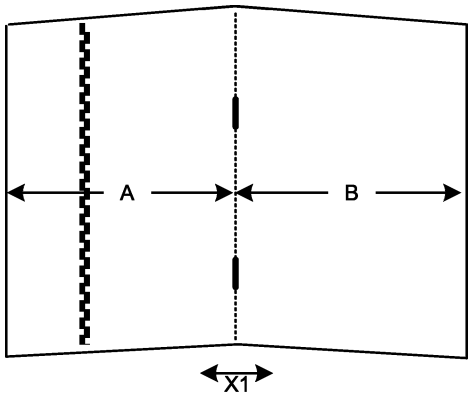

Figure 1 Measurements

7. Measure the distance between the crease and the staples (“X1” on Figure 1). The measurements should be less than 2.5 mm.
8. If either measurement is not within spec, perform the Adjustment.

Adjustment

1. Examine the printed sample and determine which of 4 choices best describes the misalignment; select the button for that description.

NOTE: *The graphic in the following step is not displayed until a misalignment choice is made.*

2. Measure “A” and “B” per the graphic displayed on the UI. Enter the correction and select **Adjust**.
3. Repeat the Check and Adjustment until the measurement is correct.

5 Parts List

Overview

Introduction 5-3
Subsystem Information 5-4
Symbology 5-5

Parts Lists

1. IIT/CP

PL 1.1 IIT Covers 5-7
PL 1.2 CCD Lens Assembly/Platen Glass 5-8
PL 1.3 Full/Half Rate Carriage 5-9
PL 1.4 Full Rate Carriage 5-10
PL 1.5 CCD Lens Base Plate 5-11
PL 1.6 Motor/Transport PWB 5-12
PL 1.7 Control Panel 5-13

2. ROS

PL 2.1 ROS Assembly 5-14

3. Drives

PL 3.1 Drives (1 of 4) 5-15
PL 3.2 Drives (2 of 4) 5-16
PL 3.3 Drives (3 of 4) 5-17
PL 3.4 Drives (4 of 4) 5-18

4. Ducts

PL 4.1 Rear Duct Assemblies 5-19

5. Development

PL 5.1 Dispenser Base 5-20
PL 5.2 Dispenser Assembly (K) 5-21
PL 5.3 Dispenser Assembly (Y) 5-22
PL 5.4 Dispenser Assembly (M) 5-23
PL 5.5 Dispenser Assembly (C) 5-24

6. Transfer

PL 6.1 Transfer Assembly (1 of 4) 5-25
PL 6.2 Transfer Assembly (2 of 4) 5-26
PL 6.3 Transfer Assembly (3 of 4) 5-27
PL 6.4 Transfer Assembly (4 of 4) 5-28

7. Fuser

PL 7.1 Fuser Assembly 5-29

8. Development

PL 8.1 Development Base 5-30
PL 8.2 Guide Assembly 5-31
PL 8.3 2nd Frame Assembly 5-32

9. Paper Transport

PL 9.1 Tray Assembly (1 of 2) 5-33
PL 9.2 Tray Assembly (2 of 2) 5-34
PL 9.3 Paper Transport 5-35
PL 9.4 Paper Feeder (1 of 3) 5-36
PL 9.5 Paper Feeder (2 of 3) 5-37
PL 9.6 Paper Feeder (3 of 3) 5-38
PL 9.7 Envelope Tray Assembly 5-39

10. 2TM

PL 10.1 Tray Module (2T) 5-40

10. TTM

PL 10.2 Tray 3/4 5-41
PL 10.3 Feeder/Roller 5-42
PL 10.4 Tray 3/4 Feeder Assembly (1 of 3) 5-43
PL 10.5 Tray 3/4 Feeder Assembly (2 of 3) 5-44
PL 10.6 Tray 3/4 Feeder Assembly (3 of 3) 5-45
PL 10.7 Electrical 5-46
PL 10.8 Covers 5-47
PL 10.9 Left Hand Cover 5-48

13. MSI

PL 13.1 MSI Feeder Assembly 5-49
PL 13.2 Lower Frame Assembly 5-50
PL 13.3 Lower Tray Assembly 5-51

14. Left Hand Cover

PL 14.1 Left Hand Assembly (1 of 4) 5-52
PL 14.2 Left Hand Assembly (2 of 4) 5-53
PL 14.3 Left Hand Assembly (3 of 4) 5-54
PL 14.4 Left Hand Assembly (4 of 4) 5-55
PL 14.5 Duplex Assembly 5-56

15. Registration Transport

PL 15.1 Registration Transport Assembly 5-57
PL 15.2 Registration Transport Assembly 5-58
PL 15.3 Take Away Chute 5-59
PL 15.4 Lower Cover Assembly 5-60

17. Exit

PL 17.1 Exit 1/OCT, Exit 2 5-61
PL 17.2 Exit 1/OCT 5-62
PL 17.3 Exit 2 (1 of 2) 5-63
PL 17.4 Exit 2 (2 of 2) 5-64

18. Electrical

PL 18.1 PWB's 5-65
PL 18.2 Switches 5-66
PL 18.3 Harnesses 5-67

PL 18.4 AC Chassis Assembly 5-68
PL 18.5 Fax Assembly 5-69

19. IOT Covers

PL 19.1 Front Cover 5-70
PL 19.2 Top, Left Covers 5-71
PL 19.3 Right, Rear Covers 5-72

22. Integrated Office Finisher

PL 22.1 Finisher Assembly (Part 1 of 2) (Integrated Office Finisher) 5-73
PL 22.2 Finisher Assembly (Part 2 of 2) (Integrated Office Finisher) 5-74
PL 22.3 Stacker Base Assembly (Part 1 of 5) (Integrated Office Finisher) 5-75
PL 22.4 Stacker Base Assembly (Part 2 of 5) (Integrated Office Finisher) 5-76
PL 22.5 Stacker Base Assembly (Part 3 of 5) (Integrated Office Finisher) 5-77
PL 22.6 Stacker Base Assembly (Part 4 of 5) (Integrated Office Finisher) 5-78
PL 22.7 Stacker Base Assembly (Part 5 of 5) (Integrated Office Finisher) 5-79
PL 22.8 Stacker Tray Assembly (Integrated Office Finisher) 5-80
PL 22.9 Compile Assembly (Part 1 of 2) (Integrated Office Finisher) 5-81
PL 22.10 Compile Assembly (Part 2 of 2) (Integrated Office Finisher) 5-82

23. Office Finisher LX

PL 23.1 H-Transport Assembly (1 of 5) (Office Finisher LX) 5-83
PL 23.2 H - Transport Assembly (2 of 5) (Office Finisher LX) 5-84
PL 23.3 H - Transport Assembly (3 of 5) (Office Finisher LX) 5-85
PL 23.4 H - Transport Assembly (4 of 5) (Office Finisher LX) 5-86
PL 23.5 H - Transport Assembly (5 of 5) (Office Finisher LX) 5-87
PL 23.6 Finisher Covers (Office Finisher LX) 5-88
PL 23.7 Finisher Stacker (Office Finisher LX) 5-89
PL 23.8 Finisher Stapler (Office Finisher LX) 5-90
PL 23.9 Finisher Eject (1 of 5) (Office Finisher LX) 5-91
PL 23.10 Finisher Eject (2 of 5) (Office Finisher LX) 5-92
PL 23.11 Finisher Eject (3 of 5) (Office Finisher LX) 5-93
PL 23.12 Finisher Eject (4 of 5) (Office Finisher LX) 5-94
PL 23.13 Finisher Eject (5 of 5) (Office Finisher LX) 5-95
PL 23.14 Finisher Exit/Folder Assembly (Office Finisher LX) 5-96
PL 23.15 Folder Assembly (Office Finisher LX) 5-97
PL 23.16 Finisher Electrical (Office Finisher LX) 5-98
PL 23.17 Booklet Cover (Office Finisher LX) 5-99
PL 23.18 Booklet Stapler Assembly (Office Finisher LX) 5-100
PL 23.19 Booklet Front Stapler Assembly (Office Finisher LX) 5-101
PL 23.20 Booklet Rear Stapler Assembly (Office Finisher LX) 5-102
PL 23.21 Booklet Electrical (Office Finisher LX) 5-103

35. ESS

PL 35.1 ESS (1 of 3) 5-104

35. SBC

PL 35.2 ESS (2 of 3) 5-105
PL 35.3 SBC (3 of 3) 5-106

51. DADF

PL 51.1 DADF Accessory 5-107
PL 51.2 Covers, PWB 5-108
PL 51.3 Base Frame 5-109
PL 51.4 Document Tray 5-110
PL 51.5 DADF Drives (1 of 2) 5-111
PL 51.6 DADF Drives (2 of 2) 5-112
PL 51.7 Front Belt 5-113
PL 51.8 Registration, Retard, Invert, Output Chutes 5-114
PL 51.9 Roll, Sensor Bracket 5-115
PL 51.10 Document Tray 5-116
PL 51.11 Top Cover 5-117
PL 51.12 Upper Feeder 5-118
PL 51.13 Registration Chute 5-119
PL 51.14 Retard Chute 5-120
PL 51.15 Invert Chute 5-121
PL 51.16 Output Chute 5-122
PL 51.17 Sensor Bracket 5-123

Common Hardware

Common Hardware 5-124
Part Number Index 5-125

Introduction

Overview

The Parts List section identifies all part numbers and the corresponding location of all spared subsystem components.

Organization

Parts Lists

Each item number in the part number listing corresponds to an item number in the related illustration. All the parts in a given subsystem of the machine will be located in the same illustration or in a series of associated illustrations.

Electrical Connectors and Fasteners

This section contains the illustrations and descriptions of the plugs, jacks, and fasteners used in the machine. A part number listing of the connectors is included.

Common Hardware

The common hardware is listed in alphabetical order by the letter or letters used to identify each item in the part number listing and in the illustrations. Dimensions are in millimeters unless otherwise identified.

Part Number Index

This index lists all the spared parts in the machine in numerical order. Each number is followed by a reference to the parts list on which the part may be found.

Other Information

Abbreviations

Abbreviations are used in the parts lists and the exploded view illustrations to provide information in a limited amount of space. The following abbreviations are used in this manual:

Table 1 Abbreviations

Abbreviation	Meaning
A3	297 x 594 Millimeters
A4	210 x 297 Millimeters
A5	148 x 210 Millimeters
AD	Auto Duplex
AWG	American Wire Gauge
EMI	Electro Magnetic Induction
GB	Giga Byte
KB	Kilo Byte
MB	Mega Byte
MM	Millimeters
MOD	Magneto Optical Drive
NOHAD	Noise Ozone Heat Air Dirt
PL	Parts List
P/O	Part of

Table 1 Abbreviations

Abbreviation	Meaning
R/E	Reduction/Enlargement
REF:	Refer to
SCSI	Small Computer Systems Interface
W/	With
W/O	Without

Table 2 OPCOs

	Operating Companies
Abbreviation	**Meaning**
AO	Americas Operations
NASG - US	North American Solutions Group - US
NASG - Canada	North American Solutions Group - Canada
XE	Xerox Europe

Symbology

Symbology used in the Parts List section is identified in the Symbology section.

Service Procedure Referencing

If a part or assembly has an associated repair or adjustment procedure, the procedure number will be listed at the end of the part description in the parts lists e.g. (REP 5.1, ADJ 5.3)

Subsystem Information

Use of the Term “Assembly”

The term “assembly” will be used for items in the part number listing that include other itemized parts in the part number listing. When the word “assembly” is found in the part number listing, there will be a corresponding item number on the illustrations followed by a bracket and a listing of the contents of the assembly.

Brackets

A bracket is used when an assembly or kit is spared, but is not shown in the illustration. The item number of the assembly or kit precedes the bracket; the item numbers of the piece parts follow the bracket.

Tag

The notation “W/Tag” in the parts description indicates that the part configuration has been updated. Check the change Tag index in the General Information section of the Service Data for the name and purpose of the modification.

In some cases, a part or assembly may be spared in two versions: with the Tag and without the Tag. In those cases, use whichever part is appropriate for the configuration of the machine on which the part is to be installed. If the machine does not have a particular Tag and the only replacement part available is listed as “W/Tag”, install the Tag kit or all of the piece parts. The Change Tag Index tells you which kit or piece parts you need.

Whenever you install a Tag kit or all the piece parts that make up a Tag, mark the appropriate number on the Tag matrix.

Symbology

A Tag number within a circle pointing to an item number shows that the part has been changed by the tag number within the circle (Figure 1). Information on the modification is in the Change Tag Index.

A Tag number within a circle having a shaded bar and pointing to an item number shows that the configuration of the part shown is the configuration before the part was changed by the Tag number within the circle (Figure 2).

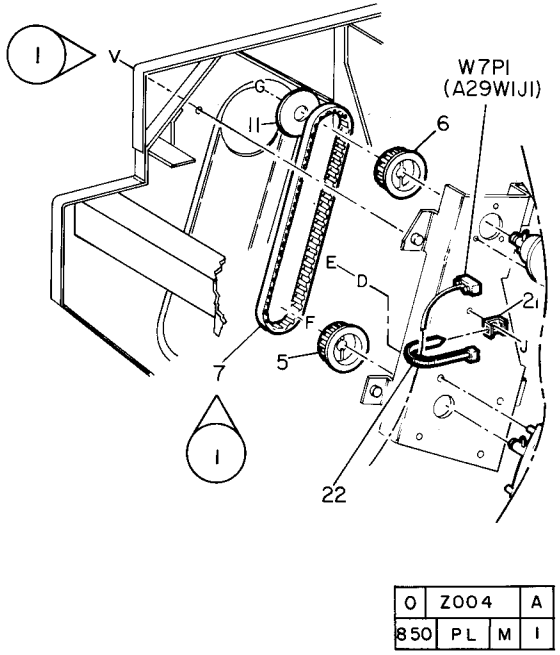

Figure 1 With Tag Symbol

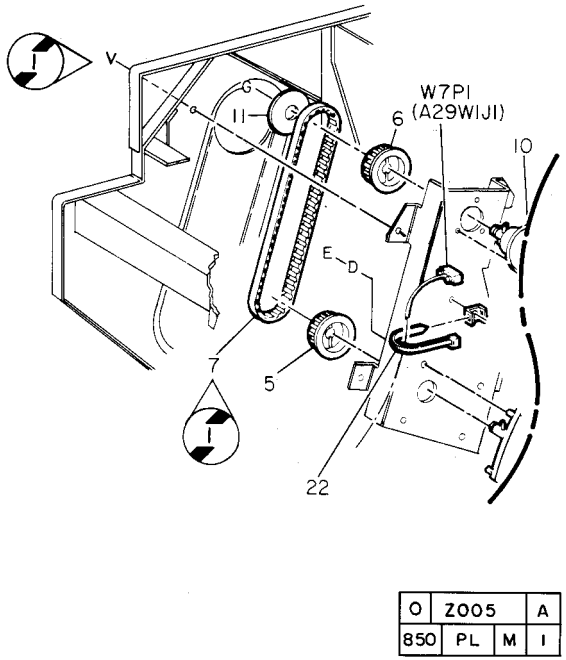

Figure 2 Without Tag Symbol

A tag number within a circle with no apex shows that the entire drawing has been changed by the tag number within the circle (Figure 3). Information on the modification is in the Change Tag Index.

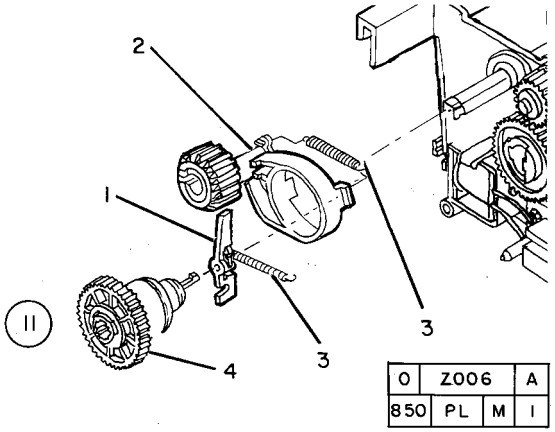

Figure 3 Entire Drawing With Tag Symbol

A tag number within a circle with no apex and having a shaded bar shows that the entire drawing was the configuration before being changed by the tag number within the circle (Figure 4).

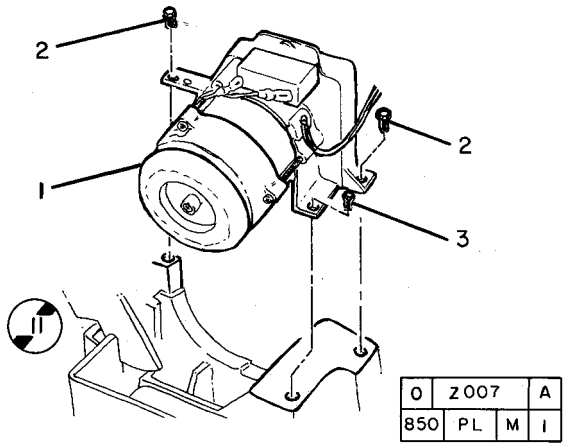

Figure 4 Entire Drawing Without Tag Symbol

PL 1.1 IIT Covers

Item	Part	Description
1	–	Right Outer Cover
2	–	Left Cover
3	–	Right Cover
4	–	Top Cover
5	–	Rear Cover
6	848E49150	DADF Connector Cover
7	–	Transport Bracket Assembly
8	–	Screw
9	–	Caution Label
10	–	Label
11	062K21136	IIT Assembly

PL1.1

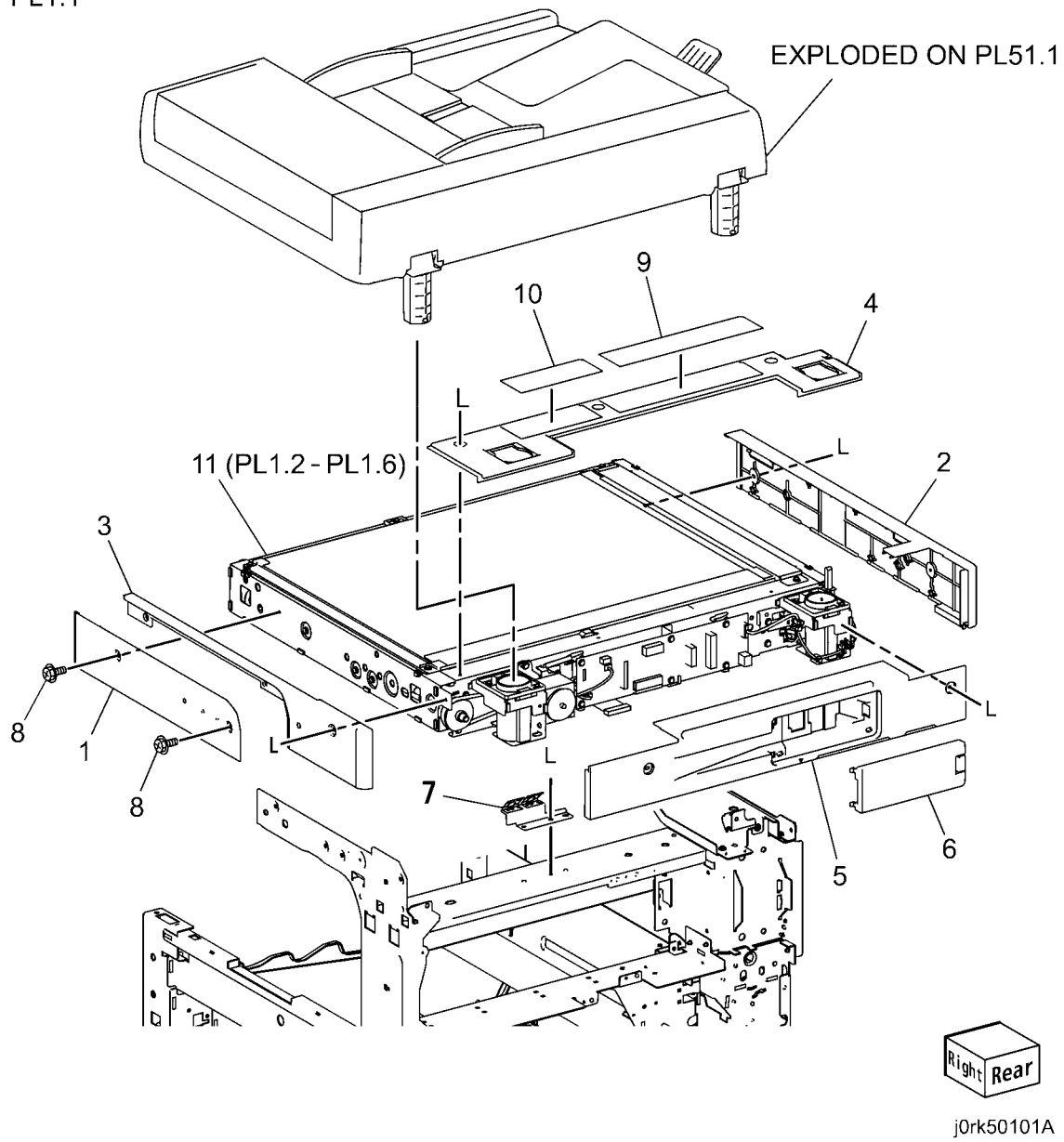

PL 1.2 CCD Lens Assembly/Platen Glass

Item	Part	Description
1	–	IIT Assembly
2	–	CCD Lens Base Plate Assembly (P/O PL 1.2 Item 22)
3	–	Pin Assembly (P/O PL 1.2 Item 22)
4	–	Right Seal
5	–	Left Seal
6	–	Wire Harness Assembly (REP 6.7)
7	–	CCD Lens Assembly (REP 6.4)
8	090K93320	CVT Platen Glass (REP 6.3)
9	090K93330	Platen Glass (REP 6.3)
10	–	Conductor (Not Spared)
11	130K64150	APS Sensor
12	815E58941	Right Plate
13	–	Lens Cover Assembly
15	849E15760	Rear Glass Support
16	849E22651	Front Glass Support
17	849E17910	Glass Support
18	–	Data Plate
19	–	PWB Assembly (P/O PL 1.2 Item 22)
20	–	Cable Band (P/O PL 1.2 Item 6)
21	–	Wire Harness Assembly (P/O PL 1.2 Item 6)
22	604K57500	Lens/CCD Kit (REP 6.4)

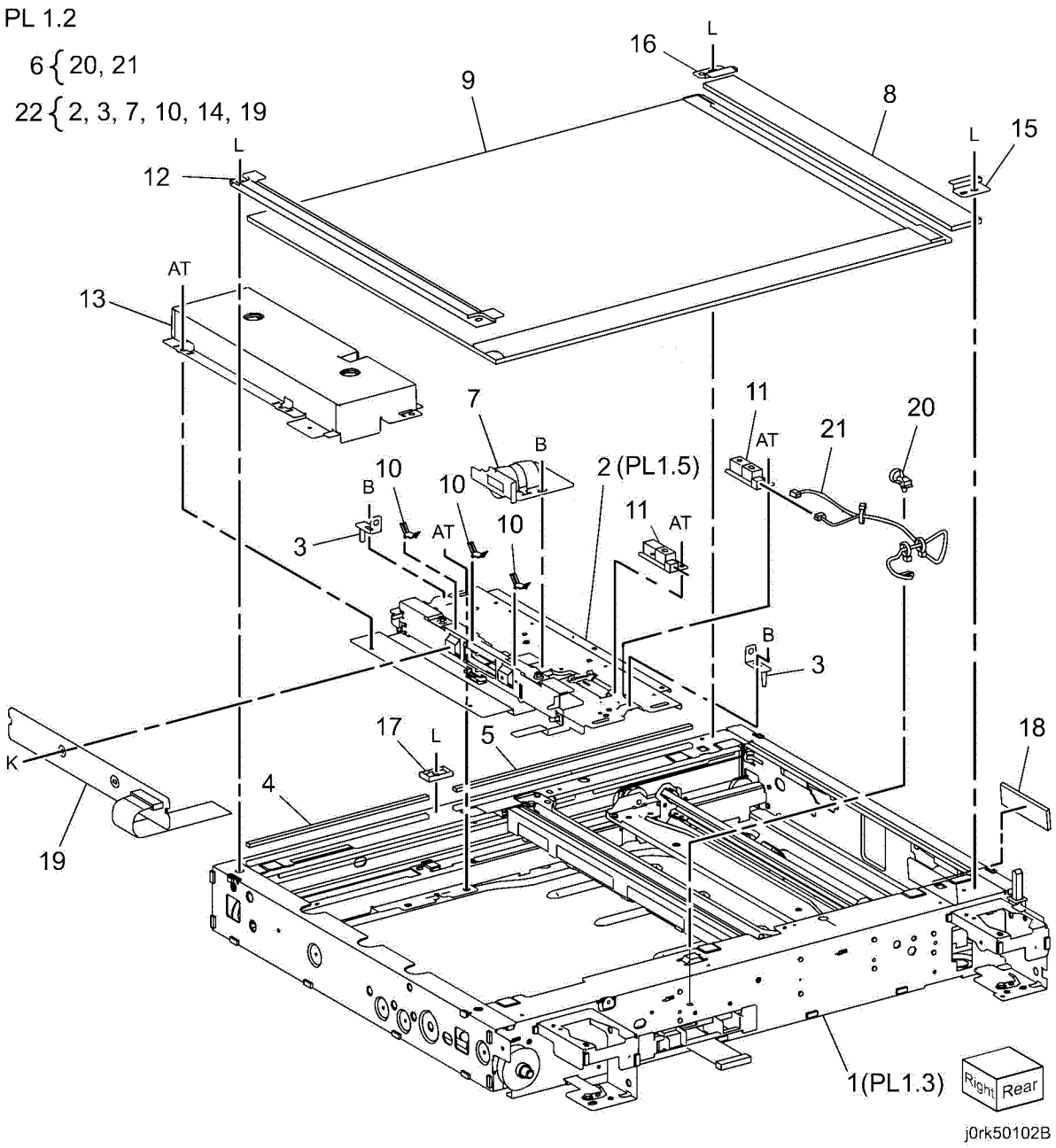

PL 1.3 Full/Half Rate Carriage

Item	Part	Description
1	–	Full Rate Carriage Assembly (ADJ 6.2)
2	041K96223	Half Rate Carriage Assembly (ADJ 6.2)
3	006K88780	Capstan Shaft
4	020E47040	Capstan Pulley
5	012K96780	Front Carriage Cable (REP 6.5)
6	012K96790	Rear Carriage Cable (REP 6.5)
7	–	Cord Holder (P/O PL 1.1 Item 11)
8	020E37030	Pulley
9	117E31780	Cable
10	120K92581	Actuator Assembly
11	930W00121	Platen Sensor, Angle Sensor
12	920W01235	Clamp
13	013E23640	Bearing
14	809E91540	Spring

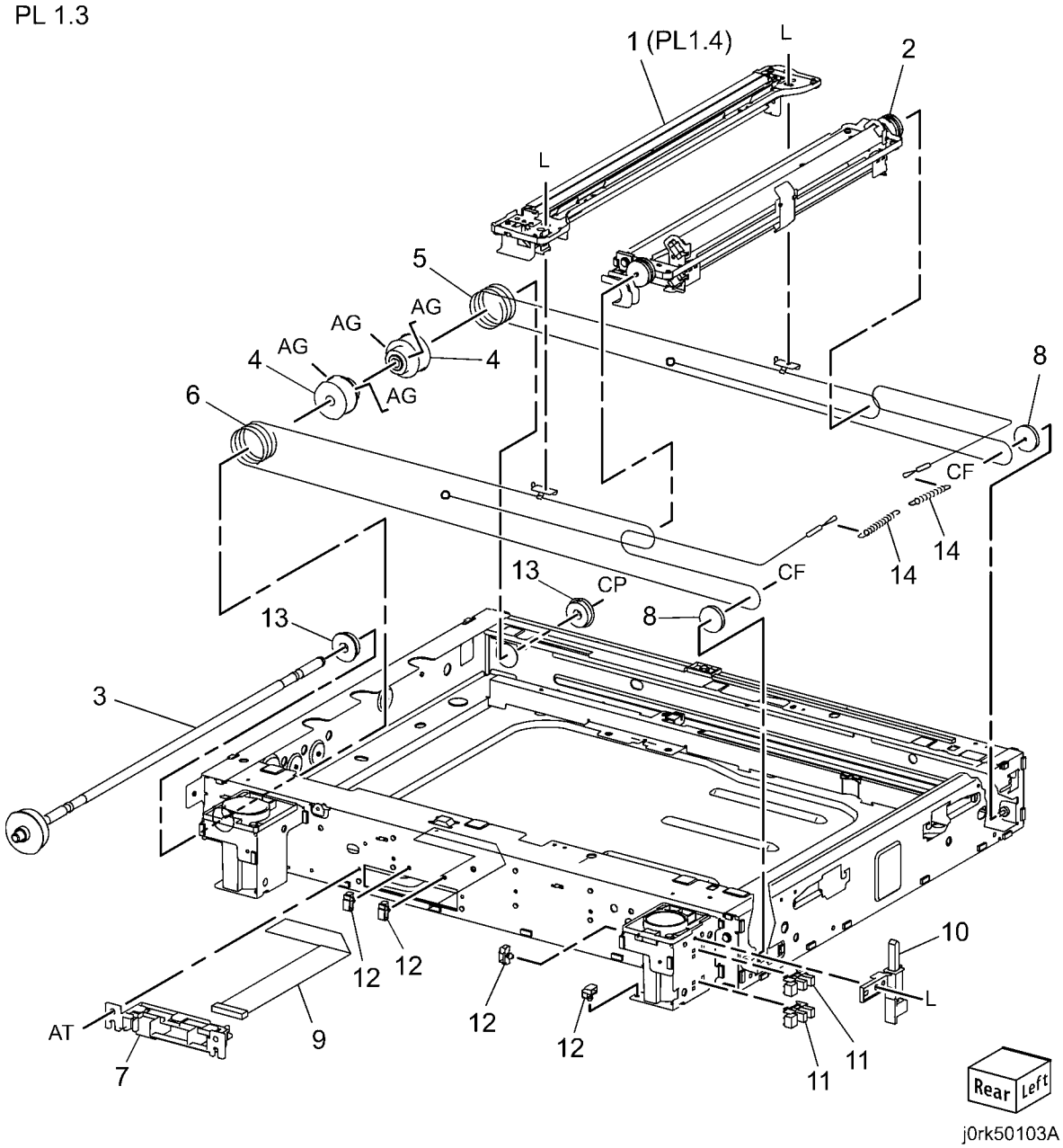

PL 1.4 Full Rate Carriage

Item	Part	Description
1	–	Full Rate Carriage (P/O PL 1.3 Item 1)
2	–	Harness Guide (P/O PL 1.3 Item 1)
3	–	Slide Harness Guide (P/O PL 1.3 Item 1)
4	–	No 1 Mirror (P/O PL 1.3 Item 1)
5	–	LED Bracket (P/O PL 1.3 Item 1)
6	–	Guide Spring (P/O PL 1.3 Item 1)
7	–	Guide Spring (P/O PL 1.3 Item 1)
8	–	Light Guide (P/O PL 1.3 Item 1) (REP 6.8)
9	960K61570	LED Lamp PWB (REP 6.6)
10	–	Slide Cord (P/O PL 1.3 Item 1)
11	–	Clip (P/O PL 1.3 Item 1)

PL 1.4

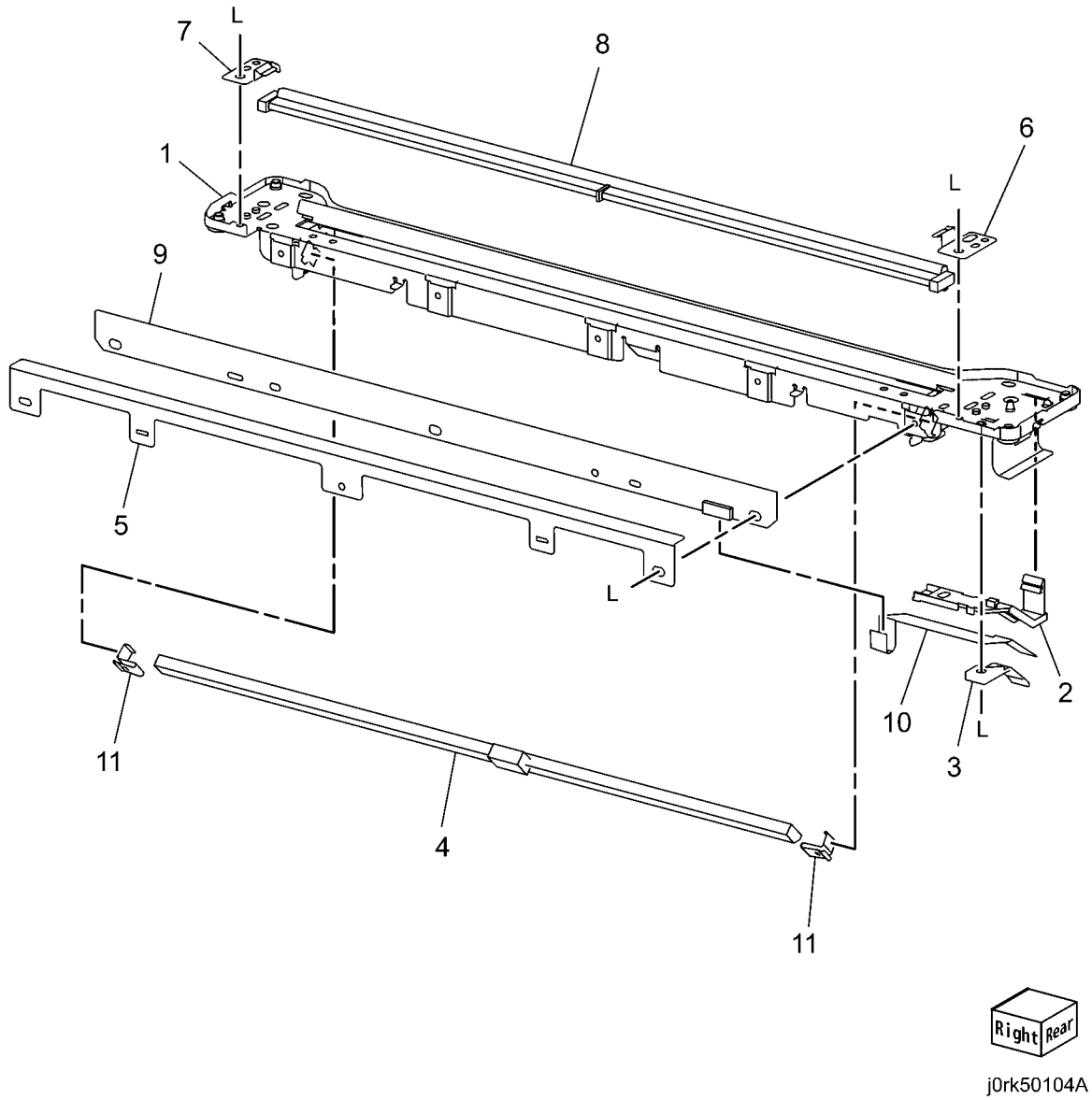

PL 1.5 CCD Lens Base Plate

Item	Part	Description
1	–	Base Plate (P/O PL 1.2 Item 22)
2	–	Stage Plate (P/O PL 1.2 Item 22)
3	–	CCD Plate (P/O PL 1.2 Item 22)
4	–	Spring (P/O PL 1.2 Item 22)
5	–	Spring (P/O PL 1.2 Item 22)
6	–	Conductor (P/O PL 1.2 Item 22)
7	–	PWB Conductor (P/O PL 1.2 Item 22)
8	920W01235	Clamp

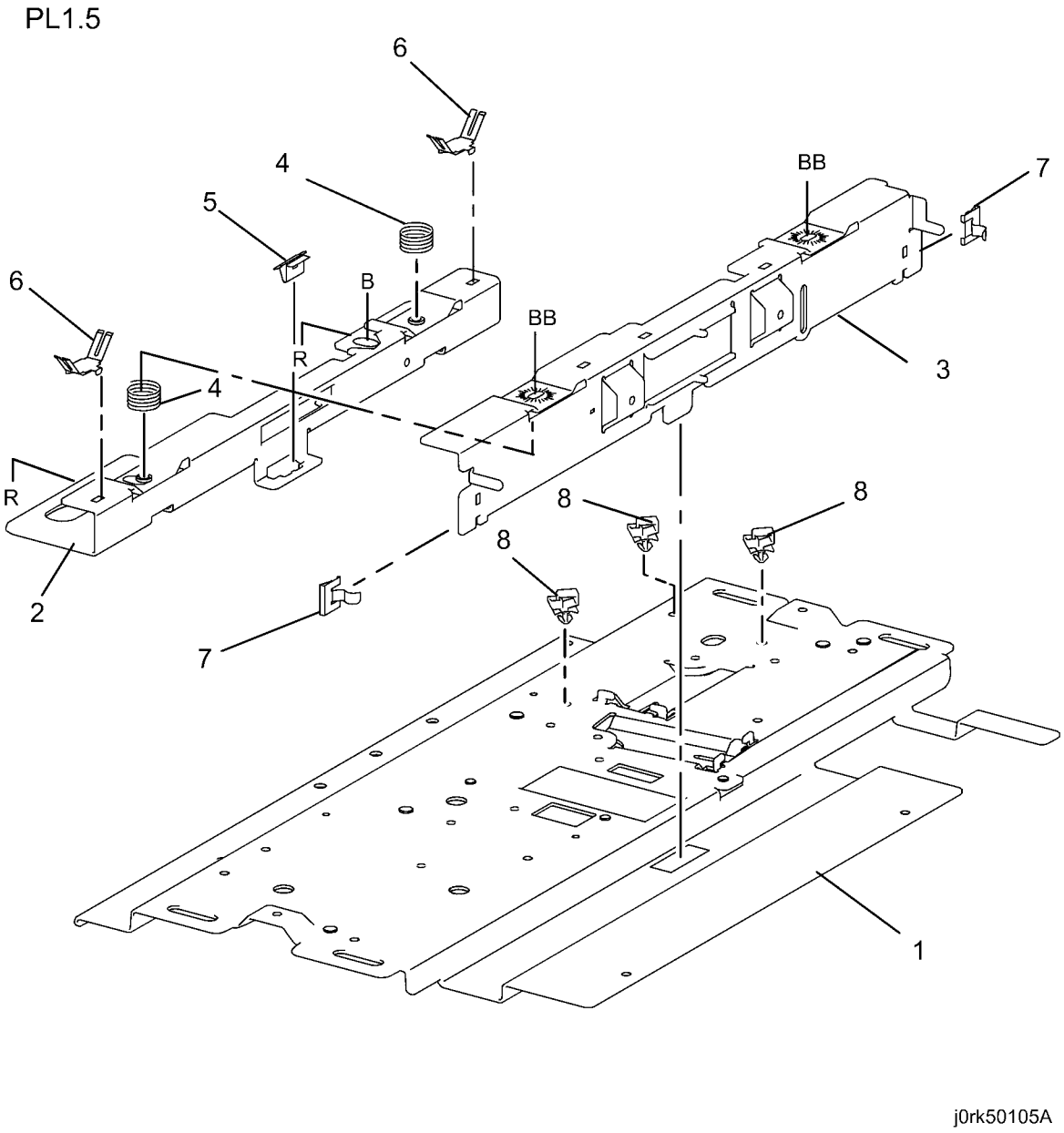

PL 1.6 Motor/Transport PWB

Item	Part	Description
1	023E27590	Belt
2	962K83770	Motor Wire Harness
3	120E18070	Clamp
4	868E47600	Hinge Support
5	868E47610	Hinge Support
6	127K61330	Carriage Motor (REP 6.9)
7	130K76820	IIT Registration Sensor Assembly
8	–	Sensor Bracket (P/O PL 1.6 Item 7)
9	–	IIT Registration Sensor
10	–	Bracket (Not Spared)
11	809E92410	Spring
12	920W01235	Clamp
13	960K60790	IIT PWB (REP 6.10)
14	–	Bracket (Not Spared)
15	962K83750	Sensor Wire Harness (Not Spared)

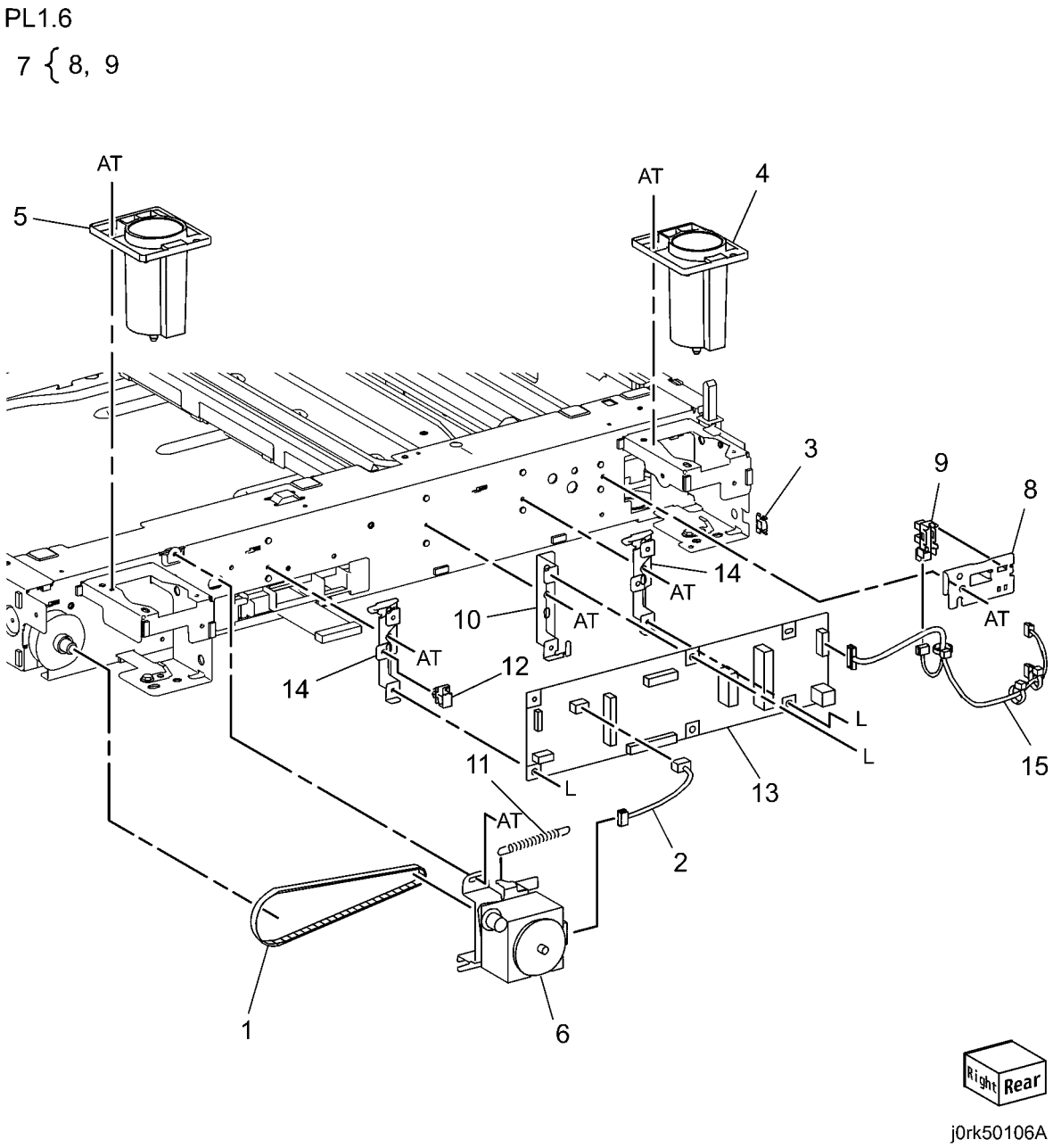

PL 1.7 Control Panel

Item	Part	Description
1	848K61880	Control Panel Assembly (XC) (REP 6.11)
–	848K61890	Control Panel Assembly (XE)
2	–	Control Panel (P/O PL 1.7 Item 1)
3	–	Stylus (Not Spared)
4	–	UI Cable (Not Spared)
5	604K70430	Name Label
6	–	Clip Cover (Not Spared)
7	848E55540	USB Cover
8	848E55551	USB Cap Cover (P/O PL 1.7 Item 1)
9	–	USB Bracket Assembly (Not Spared)
10	–	UI USB Cable (Not Spared)
11	–	Bracket (Not Spared)
12	676K00040	B/P UI Overlay Label
–	676K00020	French UI Overlay Label
–	676K00030	Spanish UI Overlay Label

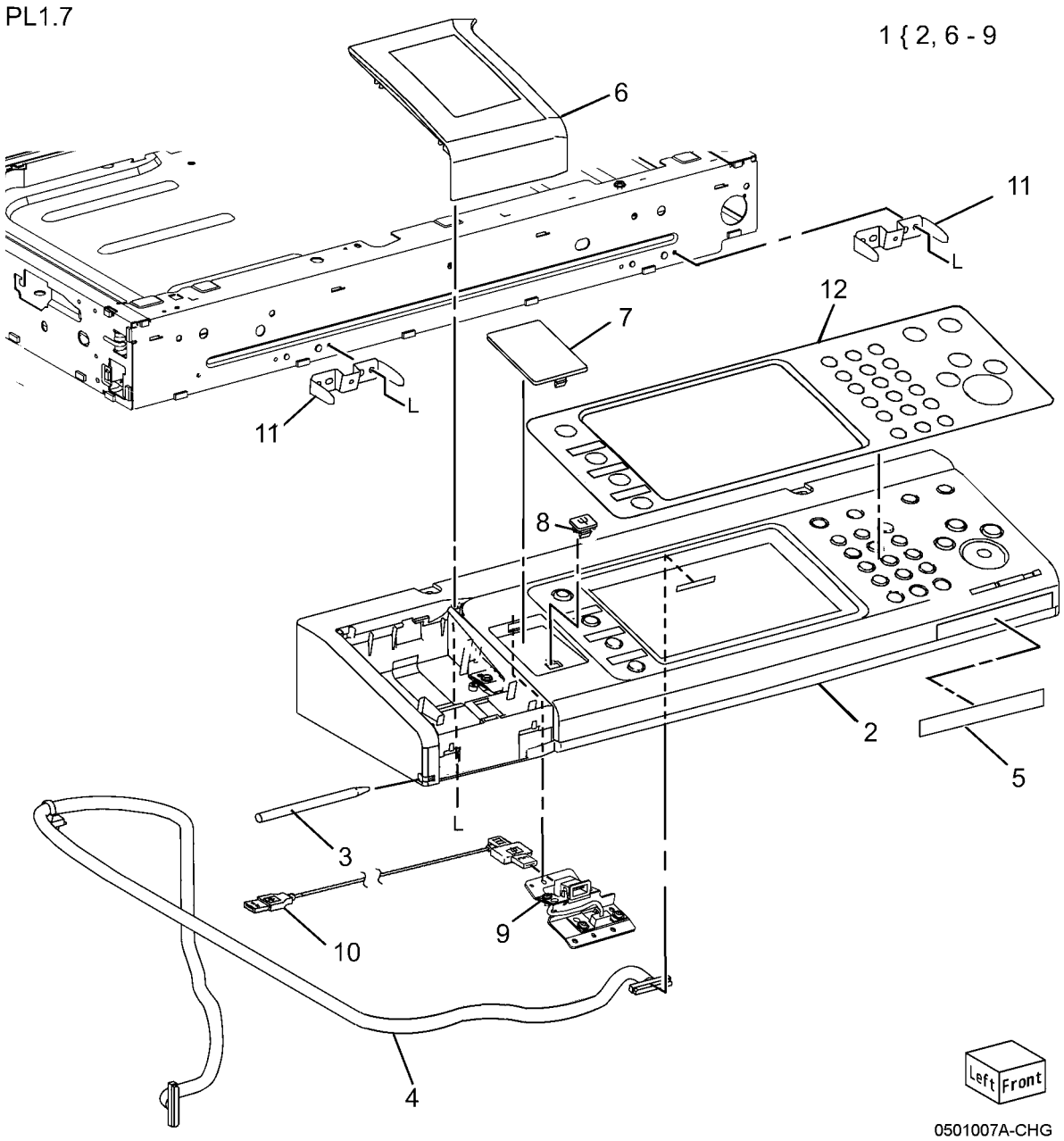

PL 2.1 ROS Assembly

Item	Part	Description
1	604K58853	ROS Kit (REP 6.2, ADJ 9.9)
2	–	Left Front Bracket (Not Spared)
3	–	Left Rear Bracket (Not Spared)
4	–	Right Front Bracket (Not Spared)
5	–	Right Rear Bracket (Not Spared)

PL2.1

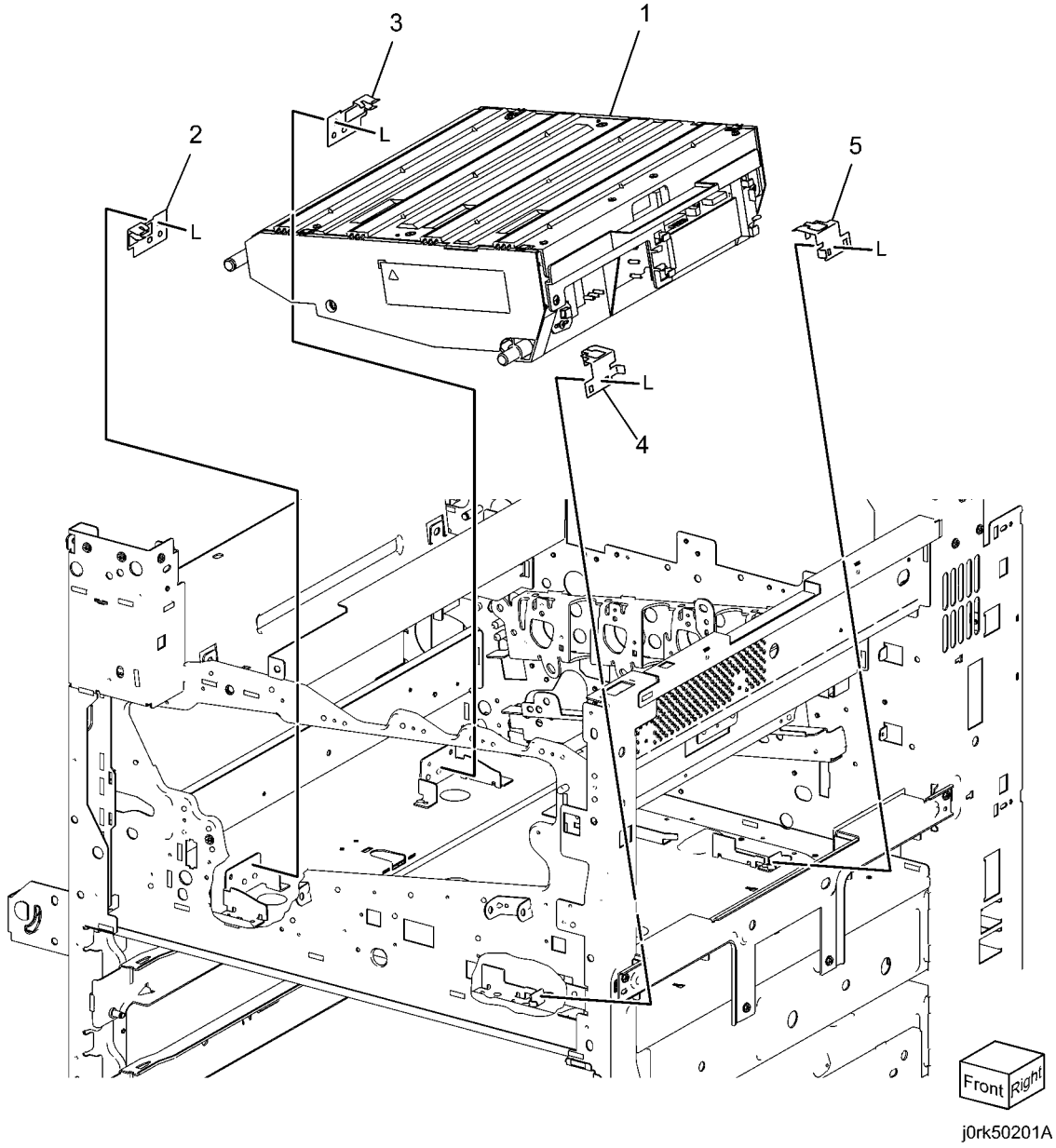

PL 3.1 Drives (1 of 4)

Item	Part	Description
1	007K16700	Drive Assembly Drum / IBT (REP 4.1, REP 4.6)
2	007K16690	Main Drive Assembly (REP 4.2)
3	007K18490	Developer Drive Assembly (REP 4.5)
4	–	Developer Motor Assembly (P/O PL 3.1 Item 3)
5	–	Developer Bracket Assembly (P/O PL 3.1 Item 3)
6	007K16720	Fuser Drive Assembly (REP 4.4)
7	–	Fuser Motor Assembly (P/O PL 3.1 Item 6)
8	–	Fuser Bracket Assembly (P/O PL 3.1 Item 6)
9	032K06530	Guide Assembly Link (REP 4.3)
10	007K16950	Duplex Gear Assembly
11	007K16980	Gear Assembly (Y, M, C)
12	007K16970	Gear Assembly (K)
13	130K76630	Sensor Assembly Drum (K)
14	–	Sensor Bracket (P/O PL 3.1 Item 13)
15	930W00123	K Drum Sensor
16	130K76670	FC Drum Sensor Assembly
17	–	Sensor Bracket (P/O PL 3.1 Item 16)
18	–	Photo Sensor (P/O PL 3.1 Item 16)
19	068K69560	Fuser Bracket Assembly
20	012E17730	Fuser Link
21	809E74950	Link Spring
22	807E31330	Helical Gear (40T/23T)
23	005E30390	Fuser Flange
24	809E74960	Fuser Spring
25	423W10254	Synchronous Belt
26	807E31000	Rack Gear

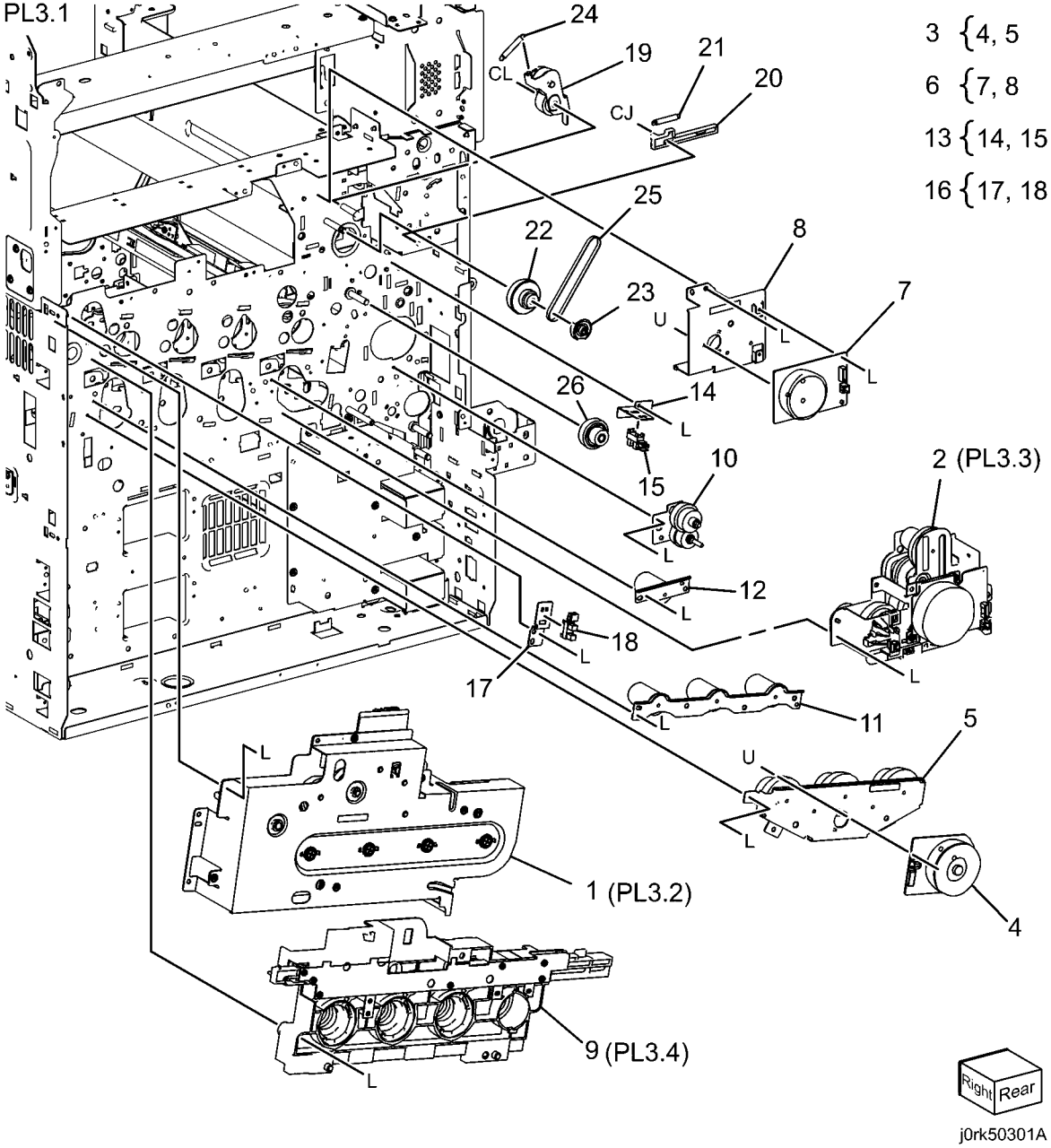

PL 3.2 Drives (2 of 4)

Item	Part	Description
1	–	Lower Drum Bracket Assembly (P/O PL 3.1 Item 1)
2	–	Upper Drum Bracket (P/O PL 3.1 Item 1)
3	127K61161	Drum Motor Assembly
–	127K64110	Drum Motor Assembly
–	–	Drum Motor Assembly
4	–	IBT Shaft Assembly (P/O PL 3.1 Item 1)
5	–	IBT Gear Assembly (82T/71T) (P/O PL 3.1 Item 1) (REP 3.2)
6	–	Helical Gear (143T) (P/O PL 3.1 Item 1)
7	–	Helical Gear (72T) (P/O PL 3.1 Item 1)
8	–	Helical Gear (72T) (P/O PL 3.1 Item 1)
9	–	Helical Gear (P/O PL 3.1 Item 1)
10	–	Coupling (P/O PL 3.1 Item 1)
11	–	Retainer (P/O PL 3.1 Item 1)
12	–	Bearing (P/O PL 3.1 Item 1)
13	–	Compression Spring (P/O PL 3.1 Item 1)
14	–	Sleeve Bearing (P/O PL 3.1 Item 1)
15	–	Bearing (P/O PL 3.1 Item 1)

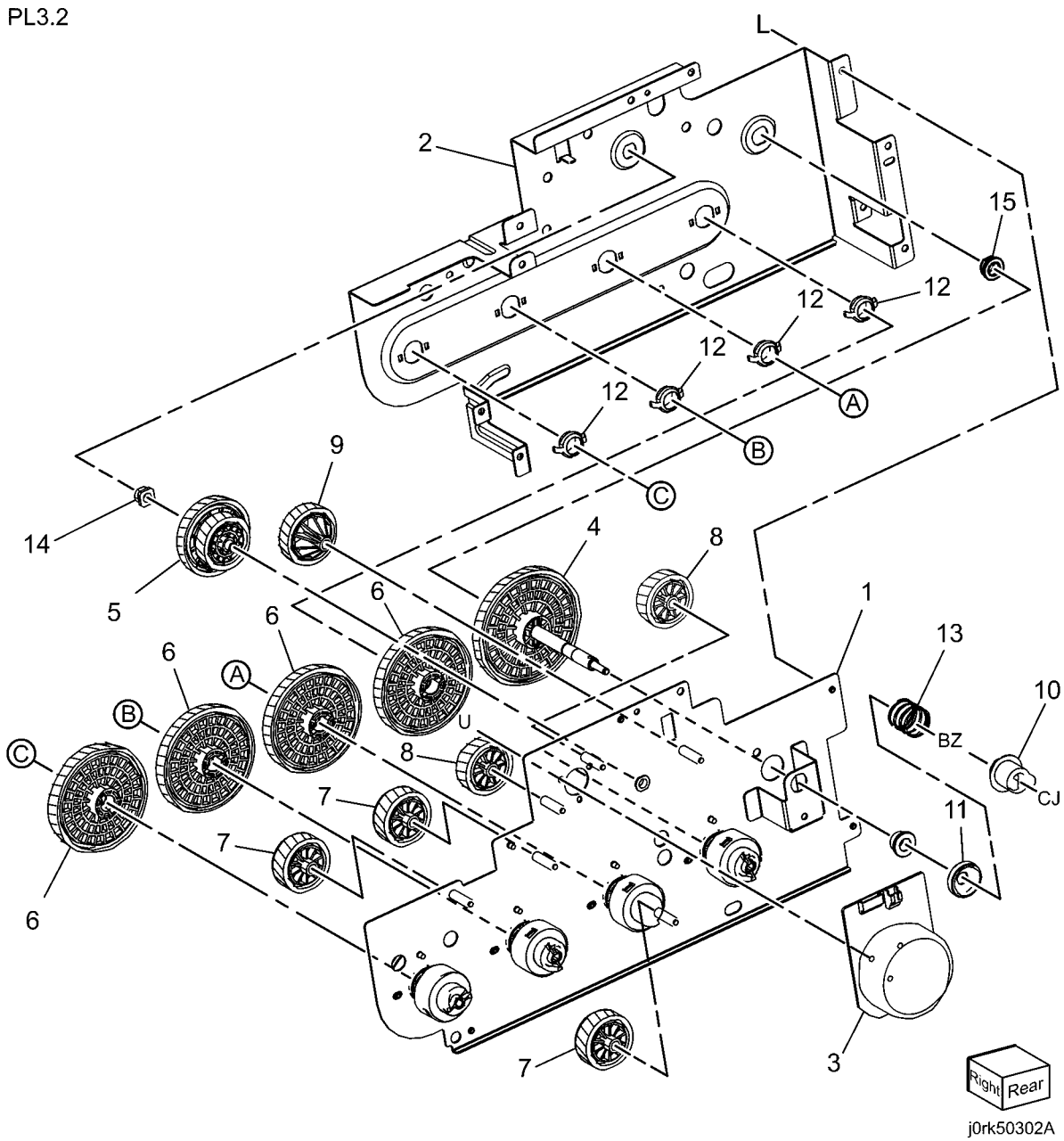

PL 3.3 Drives (3 of 4)

Item	Part	Description
1	–	Main Bracket Assembly (P/O PL 3.1 Item 3)
2	–	Main Bracket Assembly (P/O PL 3.1 Item 3)
3	–	Helical Gear (66T/21T) (P/O PL 3.1 Item 3)
4	–	Helical Gear (54T) (P/O PL 3.1 Item 3)
5	–	Helical Gear (45T/30T) (P/O PL 3.1 Item 3)
6	–	Helical Gear (24T) (P/O PL 3.1 Item 3)
7	–	Helical Gear (29T) (P/O PL 3.1 Item 3)
8	–	Helical Gear (24T) (P/O PL 3.1 Item 3)
9	–	Helical Gear (51T/25T) (P/O PL 3.1 Item 3)
10	121K46371	Developer Clutch Assembly
11	121K46380	Clutch Assembly Drum
12	127K61140	Main Motor Assembly
–	–	Main Motor Assembly
13	–	Bearing (P/O PL 3.1 Item 3)
14	413W14660	Bearing
15	–	Bearing (P/O PL 3.1 Item 3)
16	–	Drum Shaft (P/O PL 3.1 Item 3)
17	–	Developer Shaft (P/O PL 3.1 Item 3)
18	–	Harness Guard (P/O PL 3.1 Item 3)
19	–	Harness Guard (P/O PL 3.1 Item 3)
20	–	Harness Guard (P/O PL 3.1 Item 3)

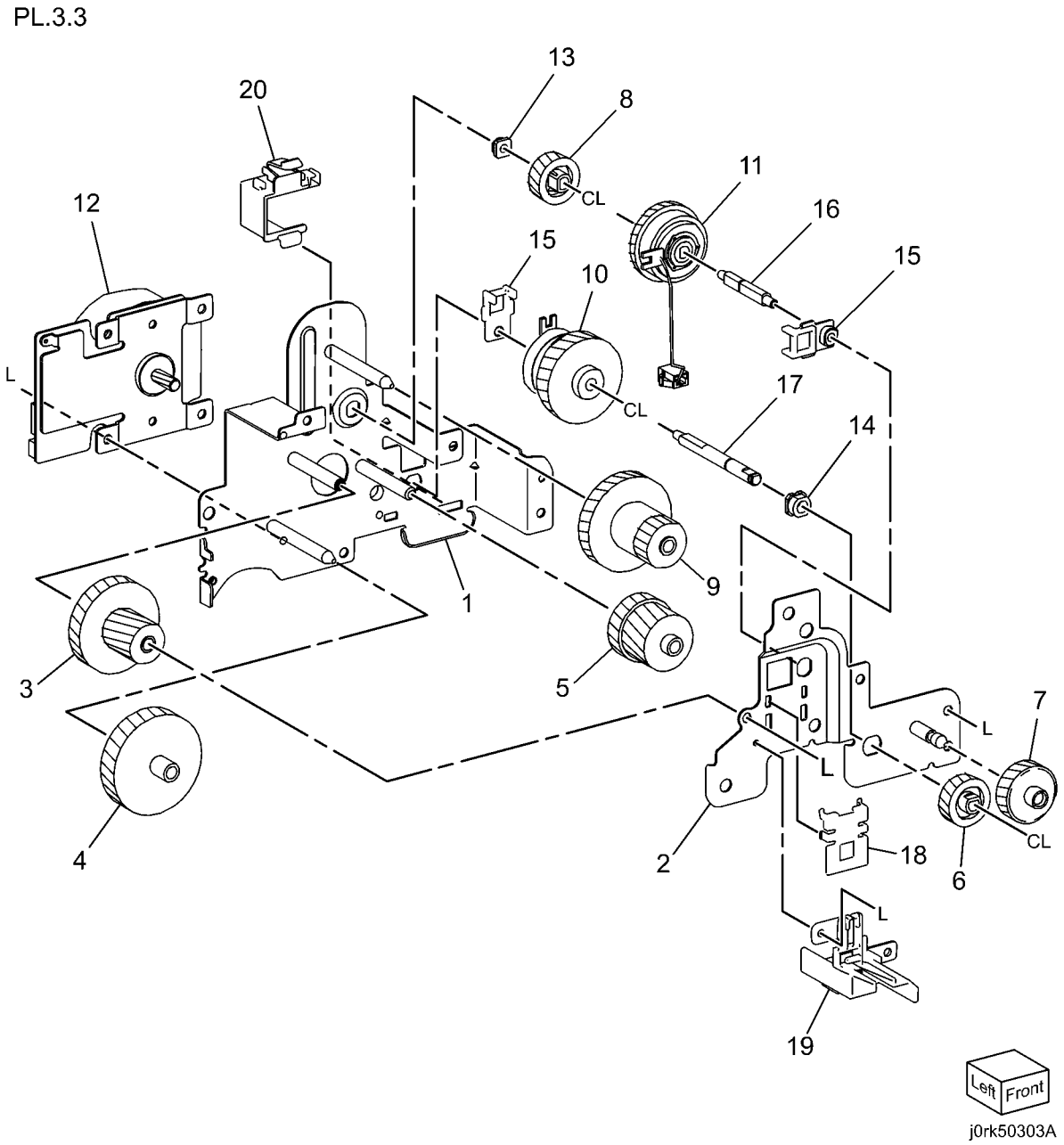

PL 3.4 Drives (4 of 4)

Item	Part	Description
1	–	Guide Assembly (P/O PL 3.1 Item 9)
2	–	Spur Gear (P/O PL 3.1 Item 9)
3	–	Link Bracket (P/O PL 3.1 Item 9)
4	–	Spur Gear (P/O PL 3.1 Item 9)
5	005K10110	Link Coupling Assembly
6	–	Spring (P/O PL 3.1 Item 9)
7	–	Stud (P/O PL 3.1 Item 9)
8	–	Bearing (P/O PL 3.1 Item 9)
9	–	Retainer (P/O PL 3.1 Item 9)

PL3.4

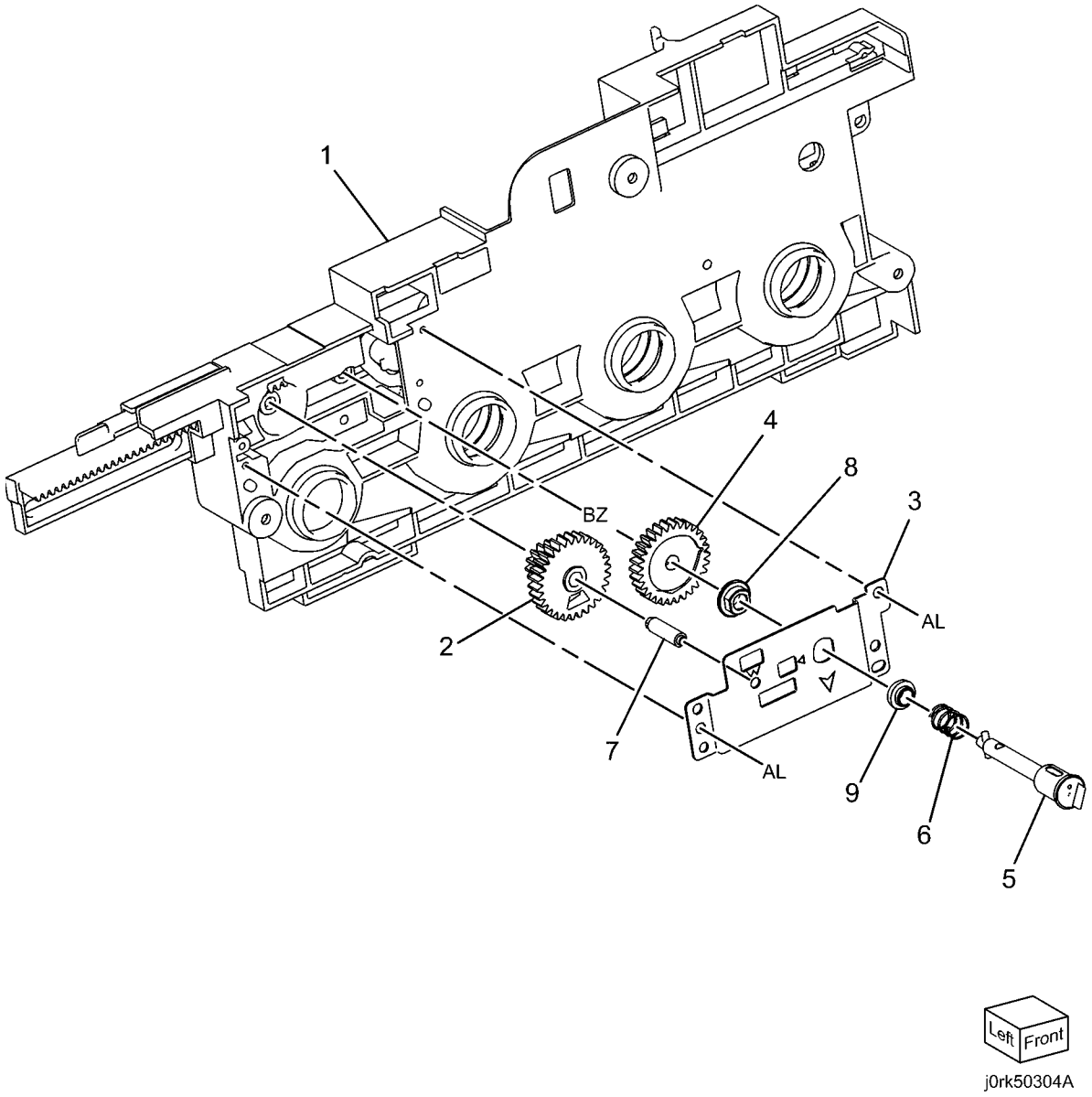

PL 4.1 Rear Duct Assemblies

Item	Part	Description
1	054K41910	Fuser Duct Assembly
2	–	Fuser Duct (P/O PL 4.1 Item 1)
3	–	Ct Series Amp Connector (P/O PL 4.1 Item 1)
4	–	Fuser Exhaust Fan Assemby (P/O PL 4.1 Item 1)
5	054K41870	Fuser Duct Assembly (Front)
6	–	Filter Duct Assembly
7	054K41890	Rear Duct Assembly (P/O PL 4.1 Item 6)
8	–	Rear Duct (Under) (P/O PL 4.1 Item 7)
9	–	Rear Duct (Left) (P/O PL 4.1 Item 7)
10	–	Lv Rear Duct (P/O PL 4.1 Item 9)
11	–	Rear Duct Assembly (Right) (P/O PL 4.1 Item 7)
12	127K61770	LV Rear Intake Fan Assembly (P/O PL 4.1 Item 7)

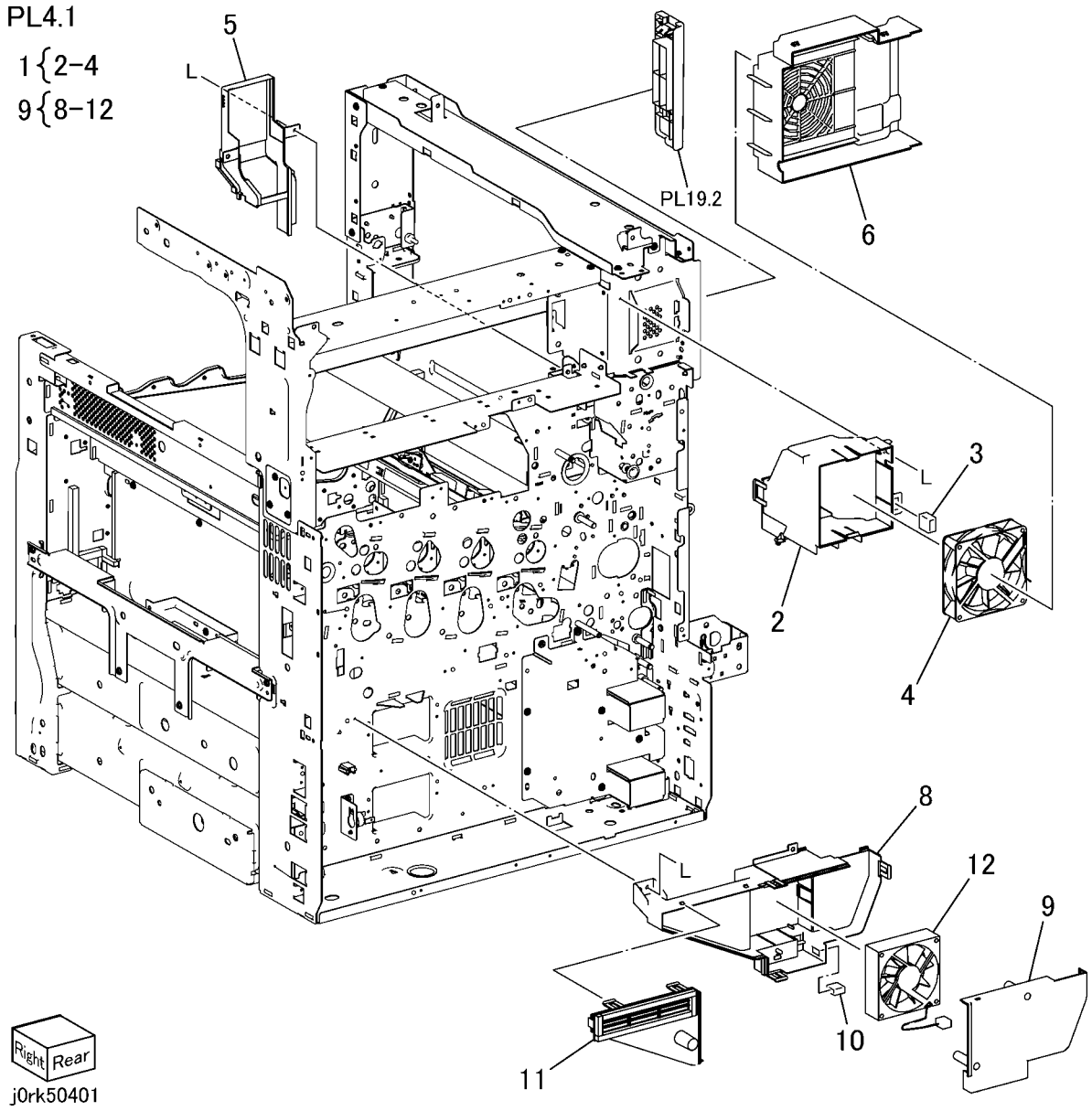

PL 5.1 Dispenser Base

Item	Part	Description
1	848K38300	High Voltage Housing Assembly
2	094K93290	Dispenser Assembly (K) (REP 9.2)
3	094K93300	Dispenser Assembly (Y) (REP 9.2)
4	094K93310	Dispenser Assembly (M) (REP 9.2)
5	094K93320	Dispenser Assembly (C) (REP 9.2)
6	803E06450	Stopper Dispenser
7	803E05630	Stopper Dispenser
8	127K61210	Dispenser Motor Assembly (REP 9.1)
9	–	Motor Assembly (M, Y)
–	127K61220	Motor Assembly (K, C)
11	–	Earth Plate (P/O PL 5.1 Item 8)
12	–	Dispenser Frame Assembly (P/O PL 5.1 Item 8)
13	848K38670	Dispenser Cover Assembly (REP 9.3)
14	019K11830	CRUM Holder
15	113K83390	CRUM Coupler
16	006R01461	Toner Cartridge (K) (Sold - DMO)
–	006R01457	Toner Cartridge (K) (Sold - NA/ESG)
–	006R01453	Toner Cartridge (K) (Metered - WW)
17	006R01456	Toner Cartridge (C) (Metered - WW)
–	006R01464	Toner Cartridge (C) (Sold - DMO)
–	006R01460	Toner Cartridge (C) (Sold - NA/ESG)
18	006R01463	Toner Cartridge (M) (Sold - DMO)
–	006R01455	Toner Cartridge (M) (Metered - WW)
–	006R01459	Toner Cartridge (M) (Sold - NA/ESG)
19	006R01458	Toner Cartridge (Y) (Sold - NA/ESG)
–	006R01462	Toner Cartridge (Y) (Sold - DMO)
–	006R01454	Toner Cartridge (Y) (Metered - WW)

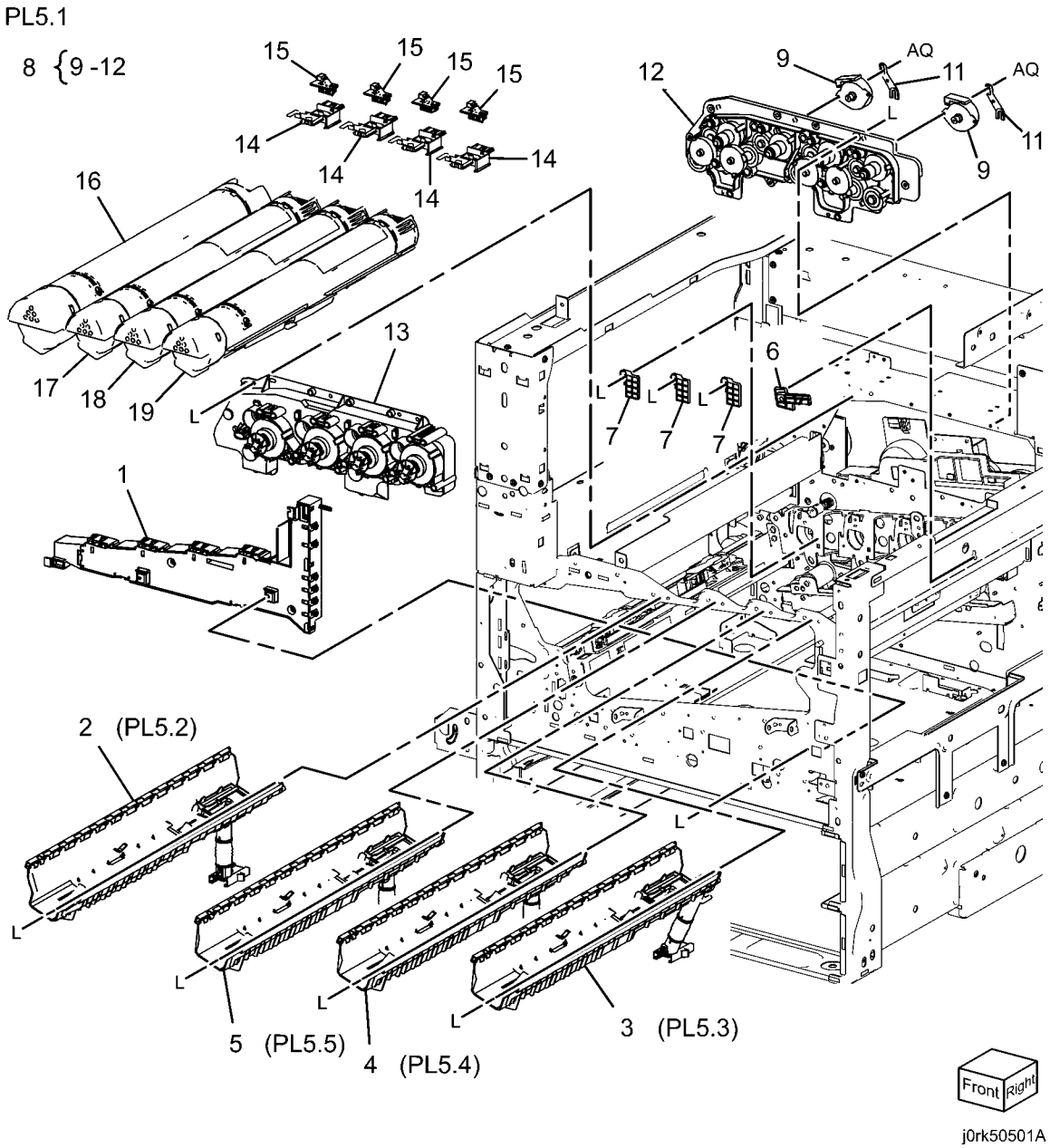

PL 5.2 Dispenser Assembly (K)

Item	Part	Description
1	–	Holder Assembly (K) (P/O PL 5.1 Item 2)
2	–	Pipe Dispenser (P/O PL 5.1 Item 2)
3	011E24121	Joint Dispenser
4	807E31211	Gear Dispenser
5	–	Auger Dispenser (P/O PL 5.1 Item 2)
6	–	Tube Dispenser (P/O PL 5.1 Item 2)
7	055K38270	Joint Shutter Assembly (P/O PL 5.1 Item 2)
8	–	Shutter Guide Assembly (P/O PL 5.1 Item 2)
9	–	Guide Shutter (P/O PL 5.2 Item 8)
10	–	Seal Guide (P/O PL 5.2 Item 8)
11	055K38260	Shutter Assembly Dispenser

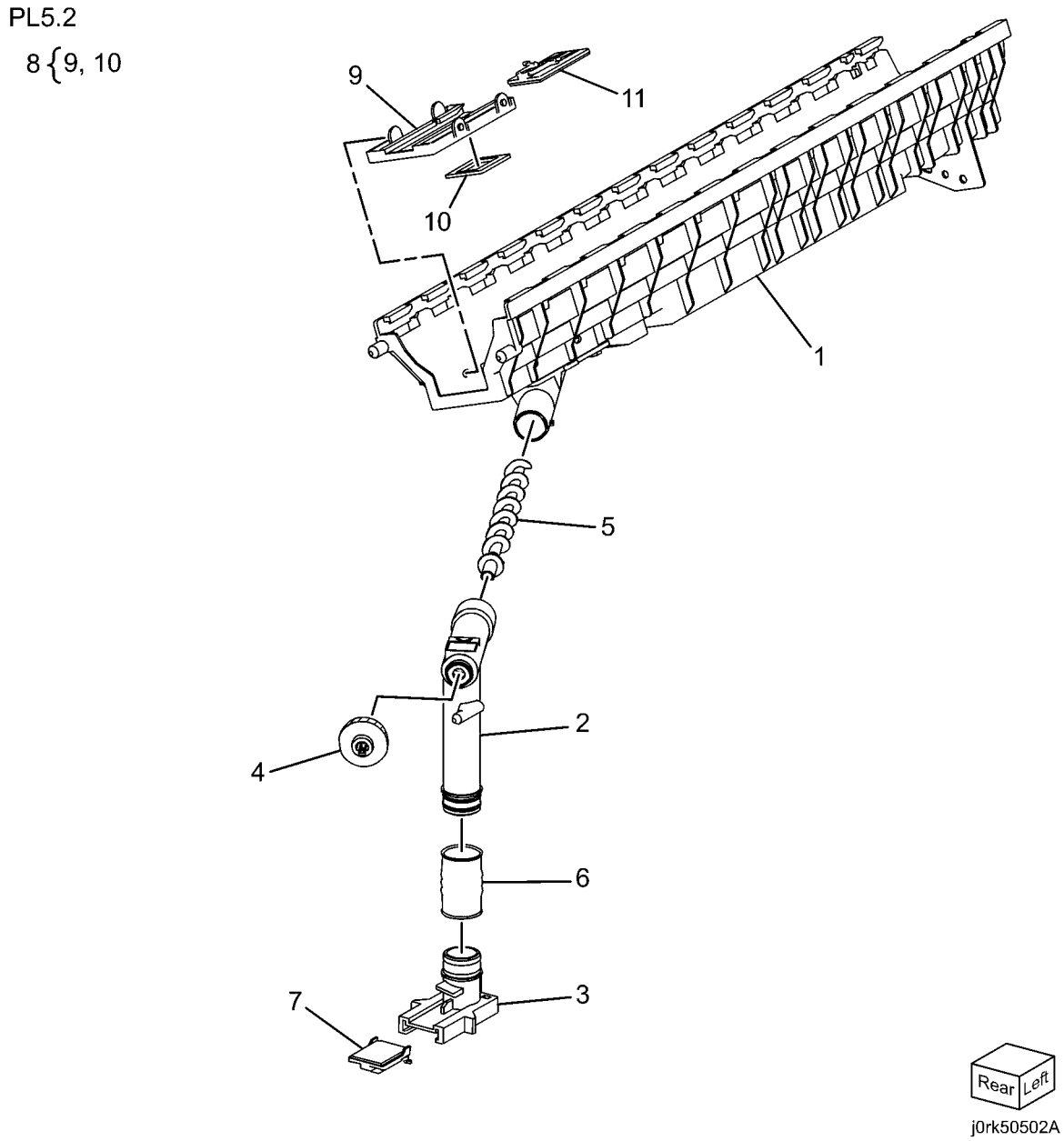

PL 5.3 Dispenser Assembly (Y)

Item	Part	Description
1	–	Holder Assembly (Y) (P/O PL 5.1 Item 3)
2	–	Pipe Dispenser (P/O PL 5.1 Item 3)
3	011E24132	Joint Dispenser
4	807E31460	Gear Dispenser
–	807E31450	Gear Dispenser
5	–	Auger Dispenser (P/O PL 5.1 Item 3)
6	–	Tube Dispenser (P/O PL 5.1 Item 3)
7	055K38270	Shutter Assembly Joint (P/O PL 5.1 Item 2)
8	–	Shutter Guide Assembly (P/O PL 5.1 Item 3)
9	–	Guide Shutter (P/O PL 5.3 Item 8)
10	–	Seal Guide (P/O PL 5.3 Item 8)
11	055K38260	Shutter Assembly Dispenser
12	–	Spring Break (P/O PL 5.1 Item 3)

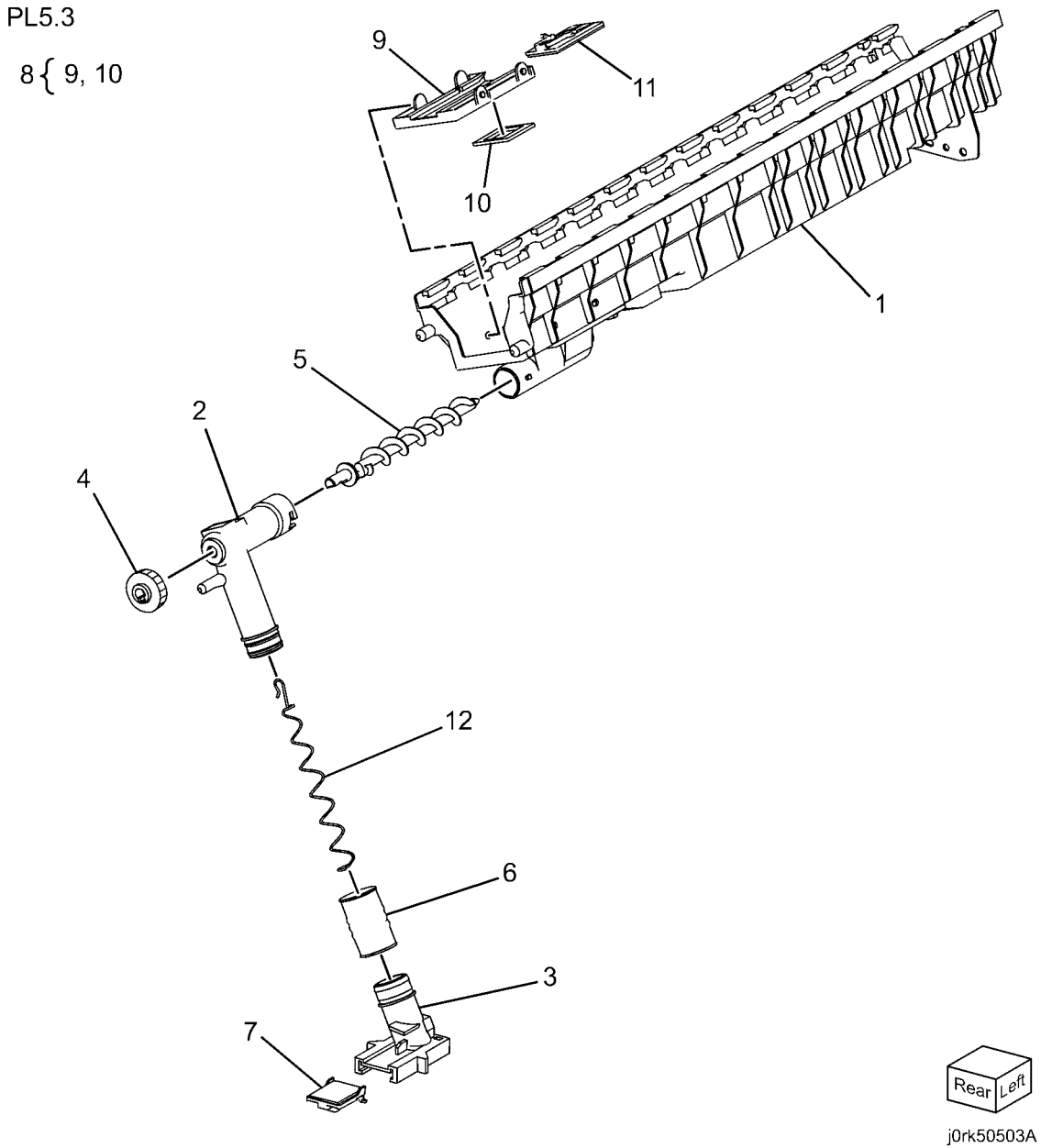

PL 5.4 Dispenser Assembly (M)

Item	Part	Description
1	–	Holder Assembly (M) (P/O PL 5.1 Item 4)
2	–	Pipe Dispenser (P/O PL 5.1 Item 4)
3	011E24121	Joint Dispenser
4	807E31470	Gear Dispenser (Not Spared)
5	–	Auger Dispenser (P/O PL 5.1 Item 4)
6	–	Tube Dispenser (P/O PL 5.1 Item 4)
7	055K38270	Shutter Assembly Joint (P/O PL 5.1 Item 2)
8	–	Shutter Guide Assembly (P/O PL 5.1 Item 4)
9	–	Guide Shutter (P/O PL 5.4 Item 8)
10	–	Seal Guide (P/O PL 5.4 Item 8)
11	055K38260	Shutter Assembly Dispenser (Not Spared)

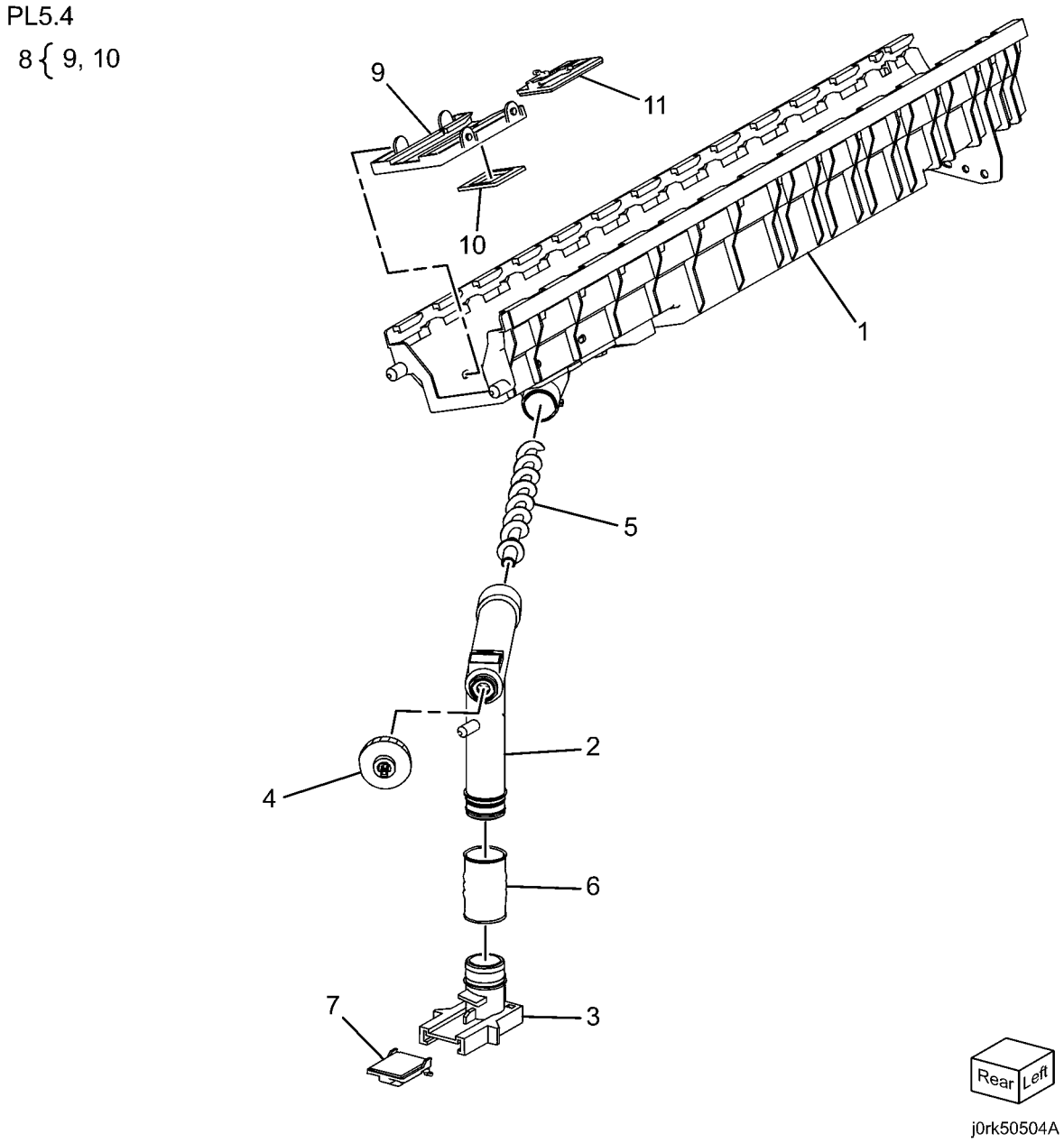

PL 5.5 Dispenser Assembly (C)

Item	Part	Description
1	–	Holder Assembly (C) (P/O PL 5.1 Item 5)
2	–	Pipe Dispenser (P/O PL 5.1 Item 5)
3	011E24121	Joint Dispenser
4	807E31480	Gear Dispenser
5	–	Auger Dispenser (P/O PL 5.1 Item 5)
6	–	Tube Dispenser (P/O PL 5.1 Item 5)
7	055K38270	Shutter Assembly Joint
8	–	Shutter Guide Assembly (P/O PL 5.1 Item 5)
9	–	Guide Shutter (P/O PL 5.5 Item 8)
10	–	Seal Guide (P/O PL 5.5 Item 8)
11	055K38260	Shutter Assembly Dispenser (Not Spared)

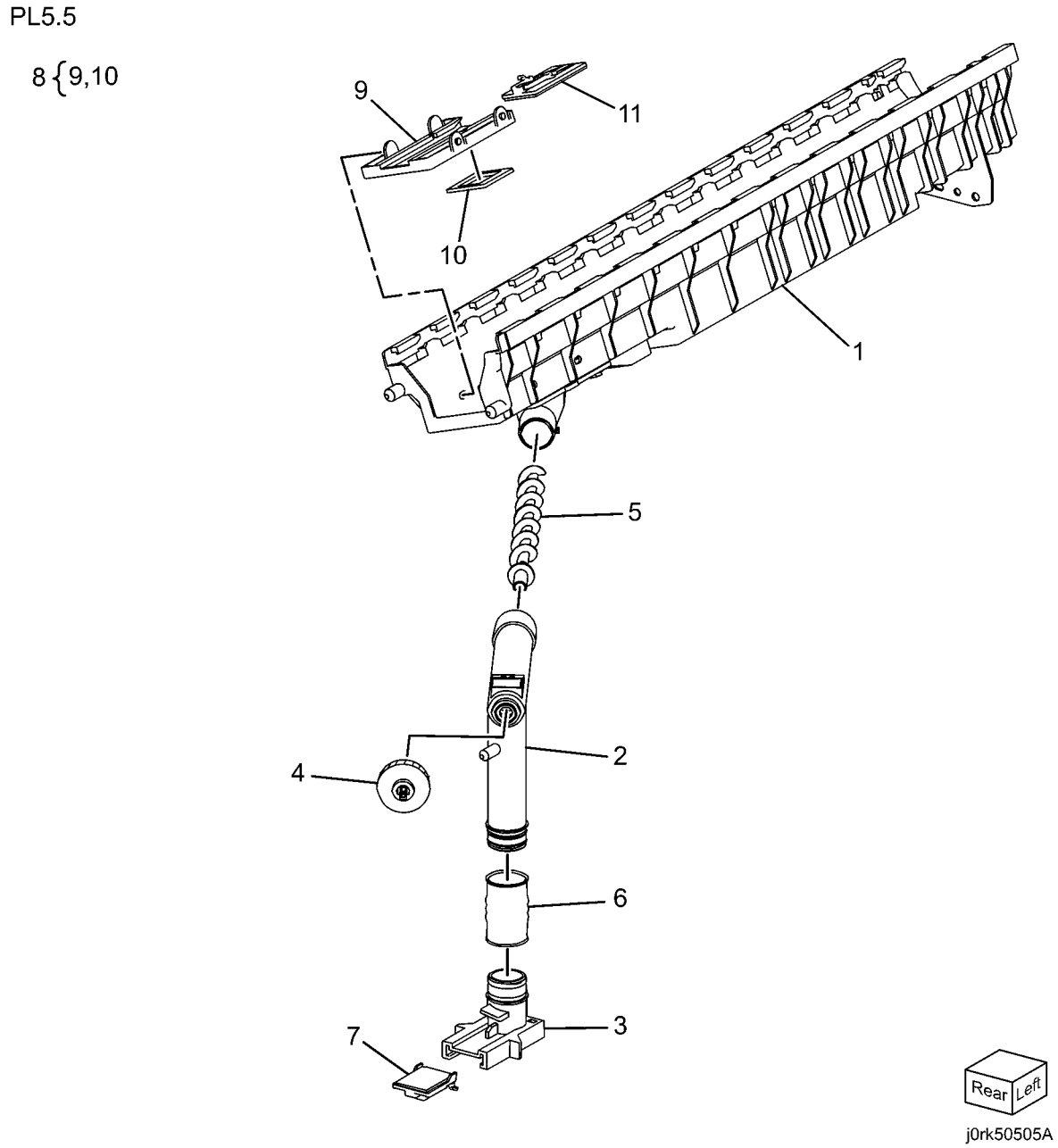

PL 6.1 Transfer Assembly (1 of 4)

Item	Part	Description
1	848K35350	Conductor Housing Assembly
2	–	IBT Guide (Not Spared)
3	032E35790	Cleaner Guide (ADJ 9.9)
4	001R00610	IBT Assembly (ADJ 9.9)
5	–	Transfer Belt Assembly (P/O PL 6.1 Item 4) (REP 9.4, ADJ 9.9)
6	042K93990	Transfer Belt Cleaner Assembly (REP 9.5)
7	–	Handle (P/O PL 6.1 Item 4)
8	–	Label
9	–	Label
10	–	Screw Shoulder
11	008R13086	2nd BTR Assembly (REP 9.6, ADJ 9.9)
12	–	Screw (Not Spared)

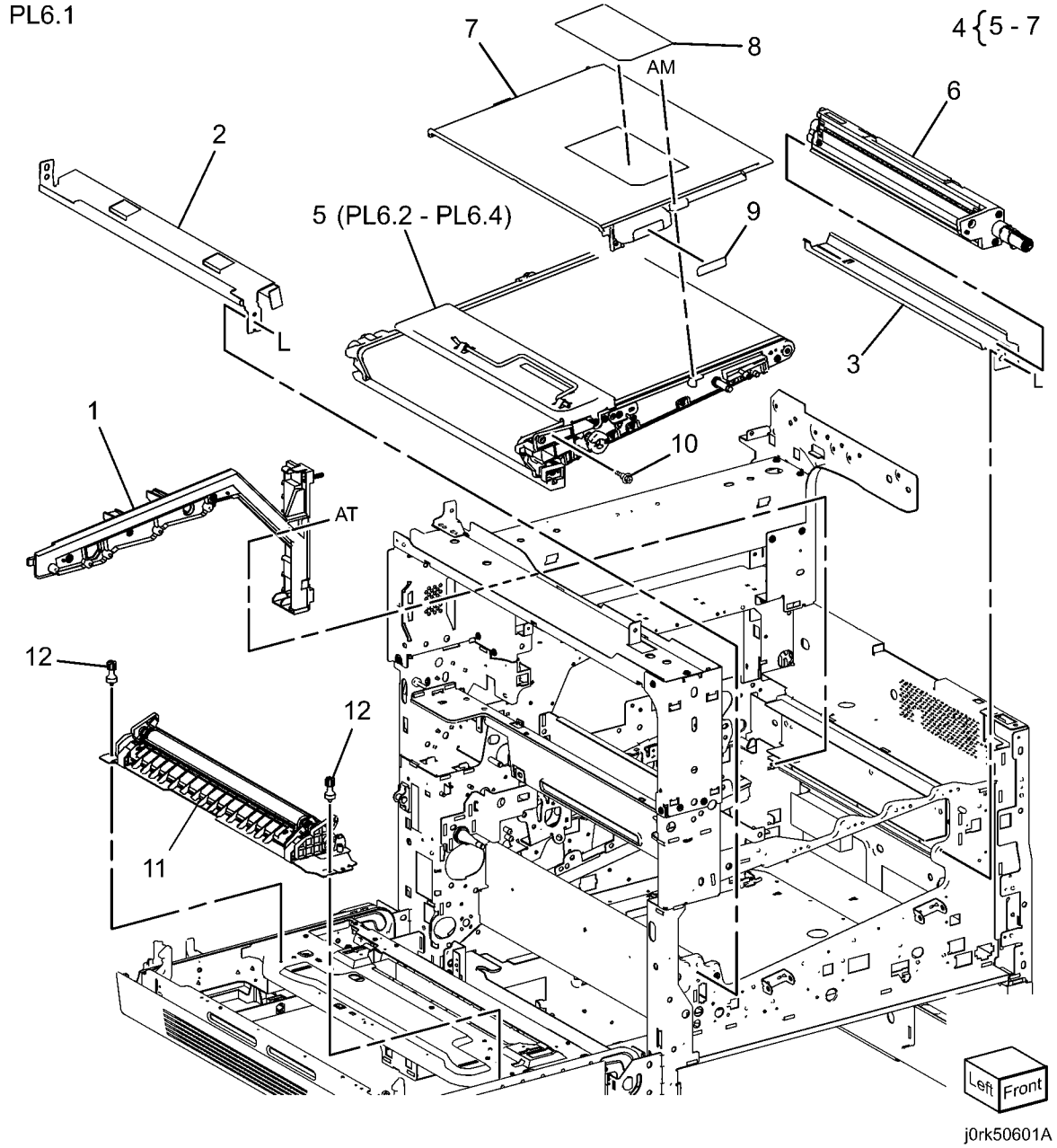

PL 6.2 Transfer Assembly (2 of 4)

Item	Part	Description
1	–	Coupling Switch
2	–	Handle Coupling
3	–	Pin (ACO)
4	–	BUR Frame (P/O PL 6.1 Item 4)
5	–	Guide
6	–	BUR Back Up Roll Assembly
7	–	BUR Bearing
8	–	Conductor Cover
9	–	Coupling Gear
10	–	Drive Roll Assembly (Not Spared)
11	–	Drive Roll (P/O PL 6.2 Item 10)
12	–	Belt Guide (P/O PL 6.2 Item 10)
13	–	Belt Guide (P/O PL 6.2 Item 10)
14	–	Pin (P/O PL 6.2 Item 10)
15	–	Ball Bearing (P/O PL 6.2 Item 10)
16	064K93511	Transfer Belt Assembly (REP 9.7)
17	–	Handle Plate (P/O PL 6.1 Item 4)
18	–	Handle (P/O PL 6.1 Item 4)
19	032E36551	Belt Guide
20	–	Spacer
21	815E58001	IBT Handle Plate
22	019E53760	Guide Spring
23	032E39900	Brake
24	–	Spring-Brake

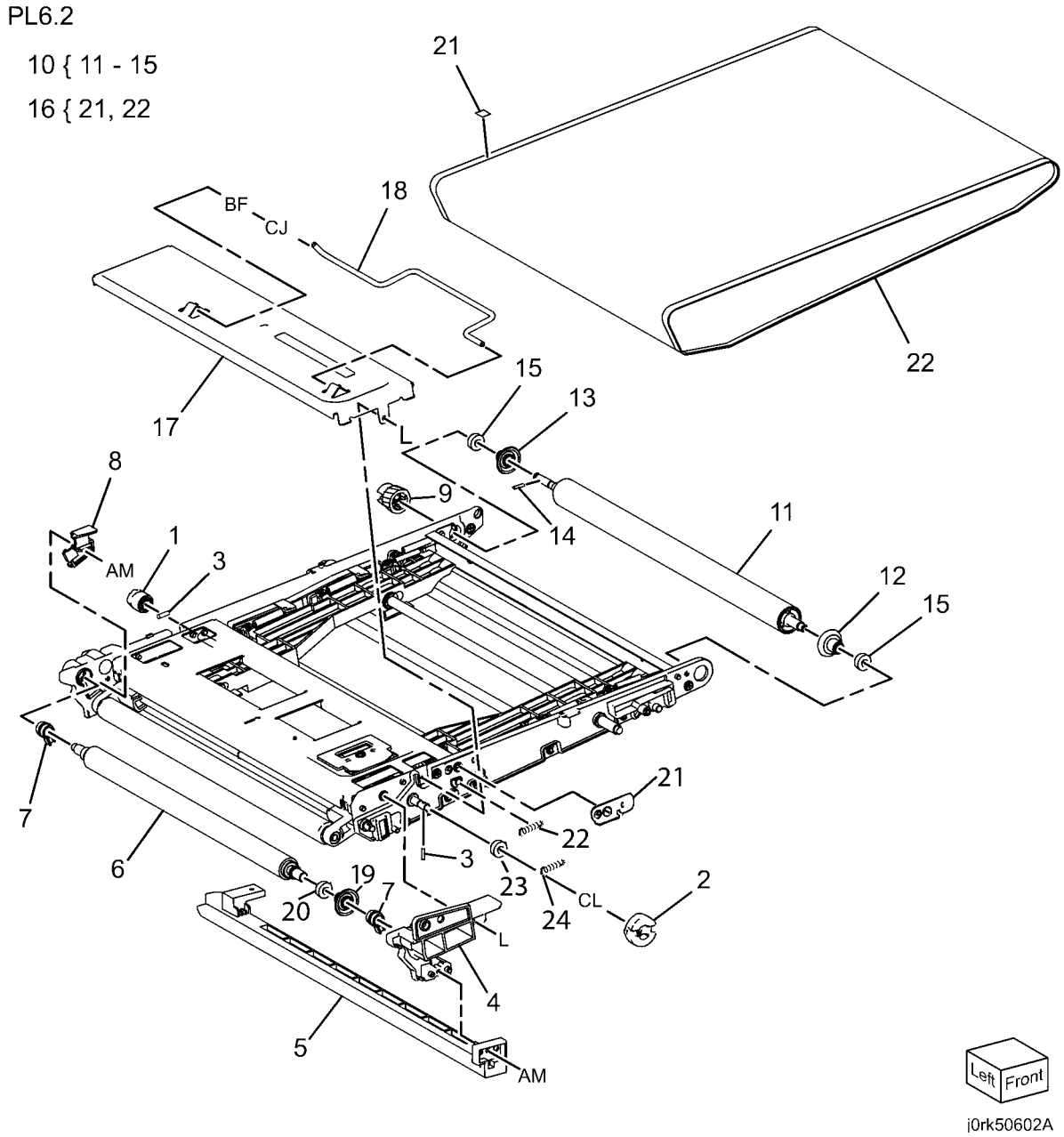

PL 6.3 Transfer Assembly (3 of 4)

Item	Part	Description
1	–	Link (P/O PL 6.1 Item 4)
2	–	Link (P/O PL 6.1 Item 4)
3	–	Idle Roll (P/O PL 6.1 Item 4)
4	–	Bearing (P/O PL 6.1 Item 4)
5	–	1st BTR Pin (P/O PL 6.1 Item 4)
6	–	Spring (P/O PL 6.1 Item 4)
7	–	Sensor Link (P/O PL 6.1 Item 4)
8	–	Sensor Link (P/O PL 6.1 Item 4)
9	–	Sensor Conductor (P/O PL 6.1 Item 4)
10	–	Tension Arm (P/O PL 6.1 Item 4)
11	–	Tension Arm (P/O PL 6.1 Item 4)
12	–	Arm Shaft (P/O PL 6.1 Item 4)
13	–	Pin
14	–	Tension Bearing (P/O PL 6.1 Item 4)
15	–	Tension Roll Assembly (P/O PL 6.1 Item 4)
16	–	Tension Spring (P/O PL 6.1 Item 4)
17	–	Tension Shaft (P/O PL 6.1 Item 4)

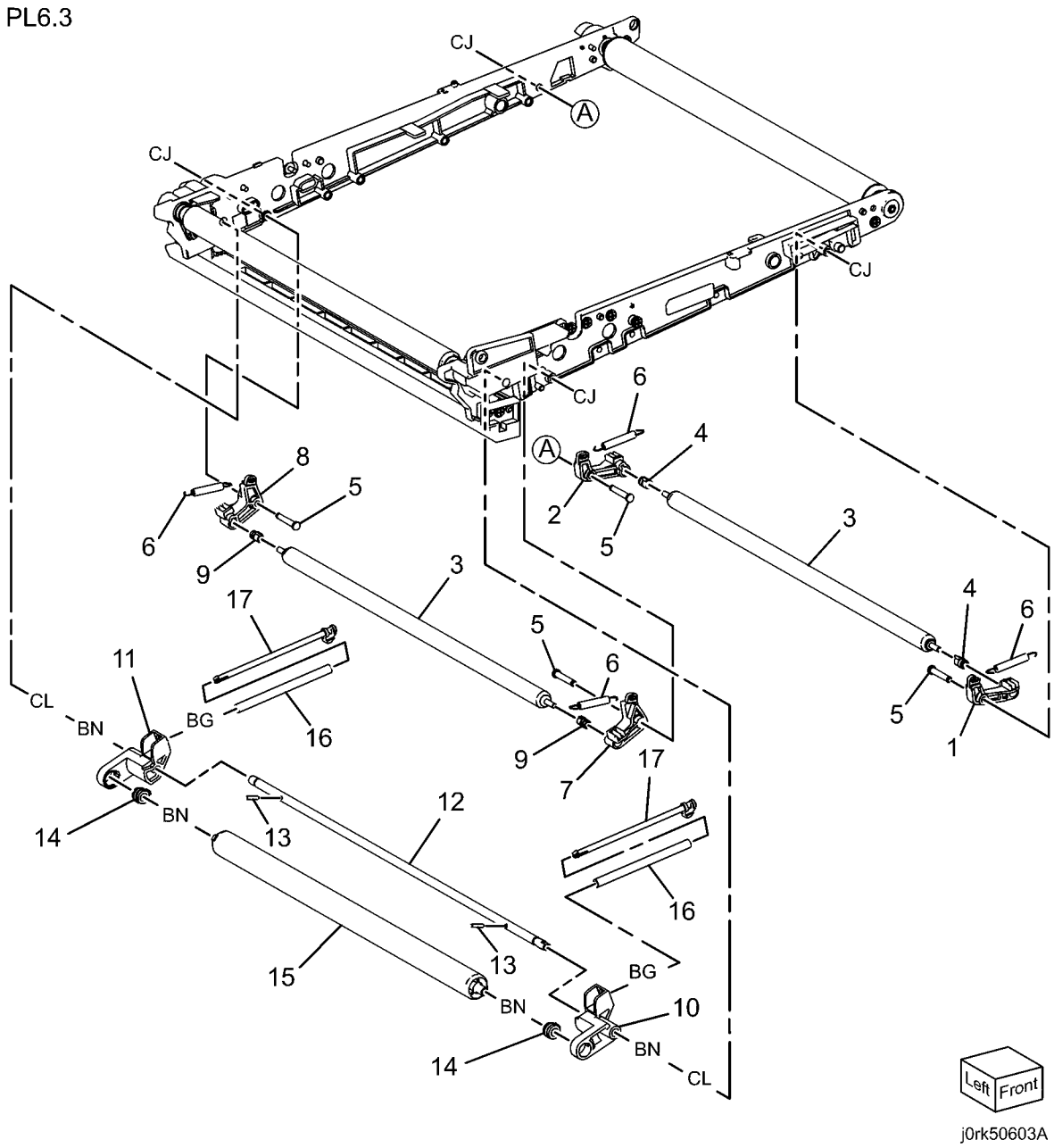

PL 6.4 Transfer Assembly (4 of 4)

Item	Part	Description
1	–	1st BTR Link (P/O PL 6.1 Item 4)
2	–	1st BTR Link (P/O PL 6.1 Item 4)
3	–	1st BTR Conductor (P/O PL 6.1 Item 4)
4	–	1st BTR (P/O PL 6.1 Item 4)
5	–	1st BTR Pin (P/O PL 6.1 Item 4)
6	–	1st BTR Spring (P/O PL 6.1 Item 4)
7	–	Arm Conductor (P/O PL 6.1 Item 4)
8	–	1st BTR Shaft (P/O PL 6.1 Item 4)
9	–	1st BTR Link (P/O PL 6.1 Item 4)
10	–	1st BTR Link (P/O PL 6.1 Item 4)
11	–	1st BTR Spring (P/O PL 6.1 Item 4)
12	–	1st BTR Link (P/O PL 6.1 Item 4)
13	–	1st BTR Link (P/O PL 6.1 Item 4)
14	–	1st BTR Spring (P/O PL 6.1 Item 4)

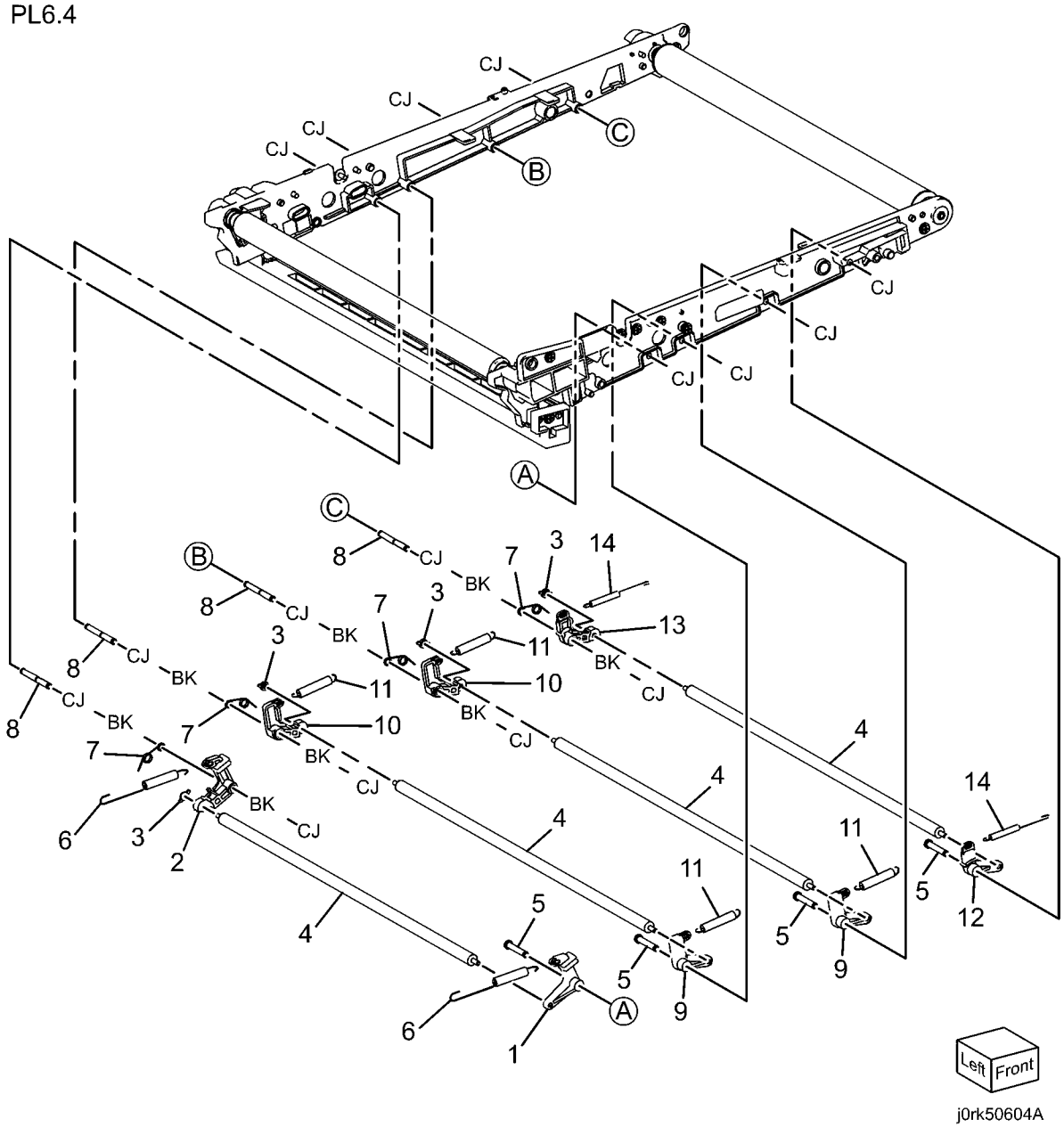

PL 7.1 Fuser Assembly

Item	Part	Description
1	008R13087	Fuser Assembly (110V) (REP 10.1)
–	008R13088	Fuser Assembly (220V)
2	–	Fuser Plate

PL7.1

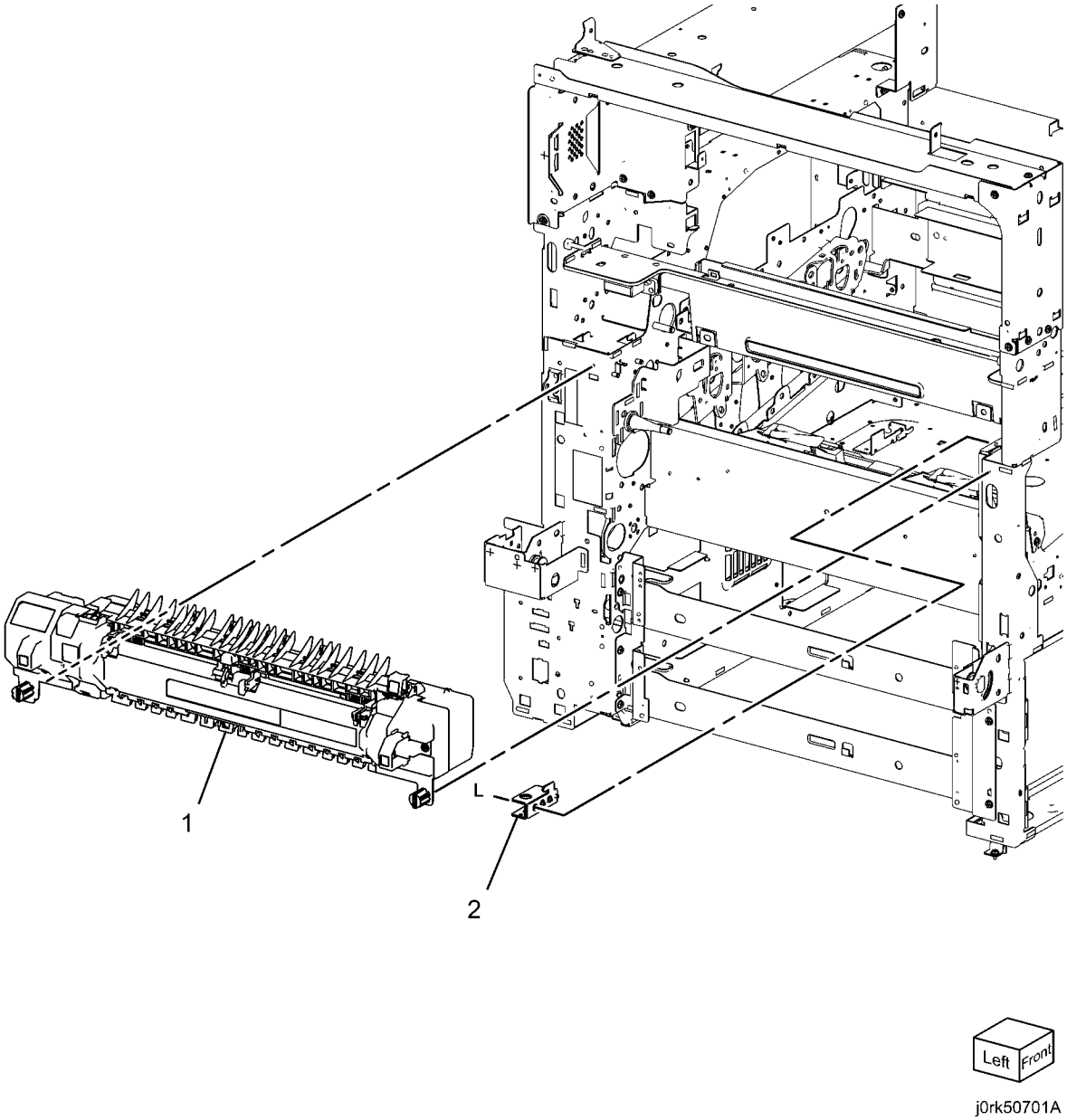

PL 8.1 Development Base

Item	Part	Description
1	019K11150	Sensor Holder Sensor Assembly
2	032K07110	CRU Guide Assembly (K) (P/O PL 8.2 Item 1)
3	032E35701	Guide
4	032E35710	Guide
5	032E35720	Harness Guide
6	604K58390	Transmit Bracket Assembly
7	122K94410	Erase Lamp Assembly (Y, M, C, K) (REP 9.11)
8	801K42720	2nd Frame Assembly
9	809E91420	Plate Spring
10	–	Cover (Not Spared)
11	868E49610	Bottle Support
12	–	Label (Not Spared)
13	806E32270	Pivot Shaft
14	013R00658	Drum Cartridge (Y) (REP 9.8)
15	013R00659	Drum Cartridge (M) (REP 9.8)
16	013R00660	Drum Cartridge (C) (REP 9.8)
17	013R00657	Drum Cartridge (K) (REP 9.8)
18	008R13089	Waste Toner Bottle Assembly
19	032K07120	CRU Guide Assembly (C) (P/O PL 8.2 Item 1)
20	032K07130	CRU Guide Assembly (M) (P/O PL 8.2 Item 1)
21	032K07140	CRU Guide Assembly (Y) (P/O PL 8.2 Item 1)

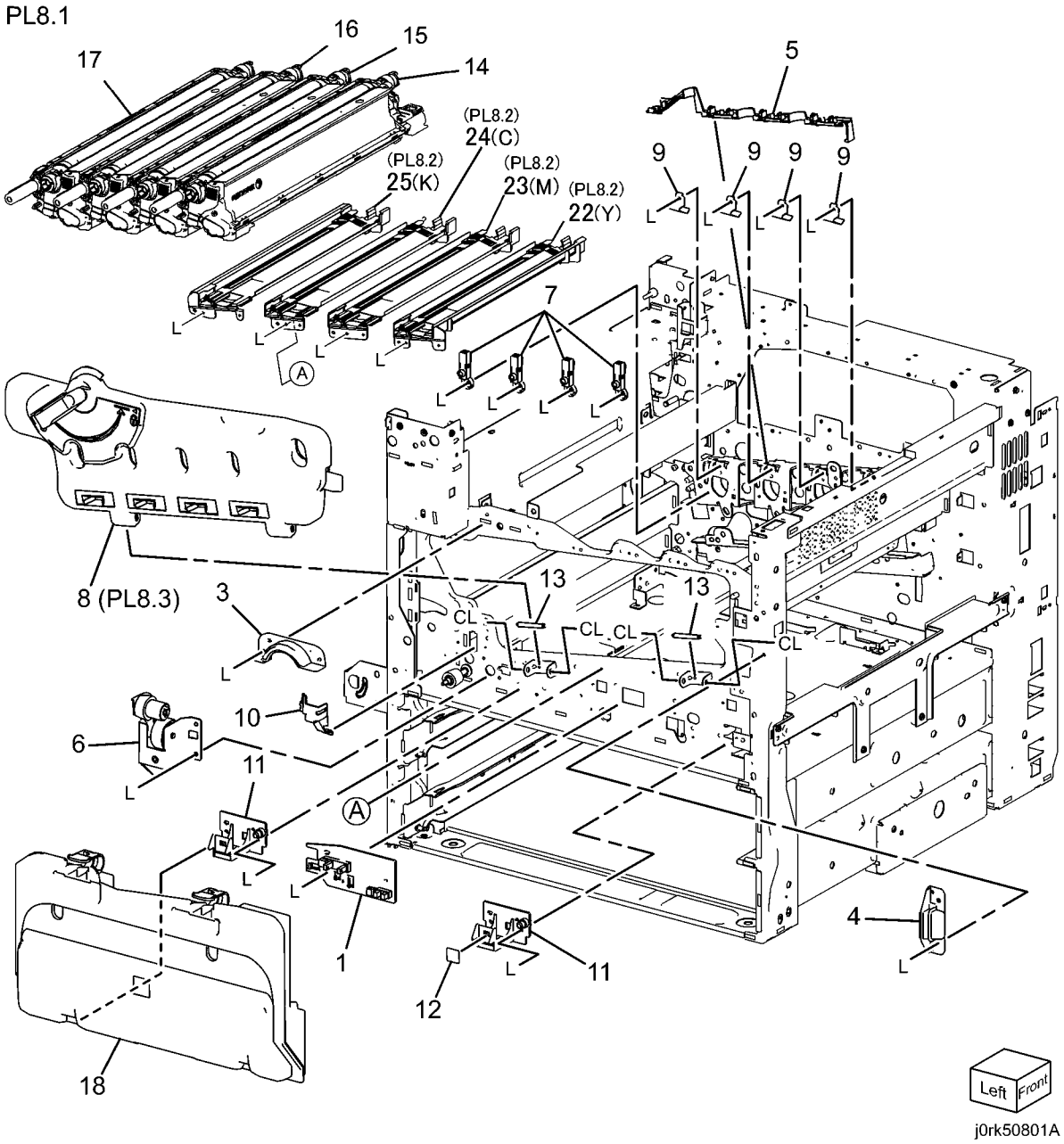

PL 8.2 Guide Assembly

Item	Part	Description
1	032K07110	CRU Guide (P/O PL 8.1 Item 2)
2	116K91011	CRUM Reader (ADJ 9.9)
3	962K59160	Xero Harness Assembly
4	–	CRU Label (P/O PL 8.2 Item 8)
5	–	CRU Label (P/O PL 8.2 Item 8)
6	–	CRU Label (P/O PL 8.2 Item 8)
7	–	CRU Label (P/O PL 8.2 Item 8)
8	604K58420	CRU Label Kit
9	032K07120	CRU Guide Assembly (C) (P/O PL 8.1 Item 19)
10	032K07130	CRU Guide Assembly (M) (P/O PL 8.1 Item 20)
11	032K07140	CRU Guide Assembly (Y) (P/O PL 8.1 Item 21)

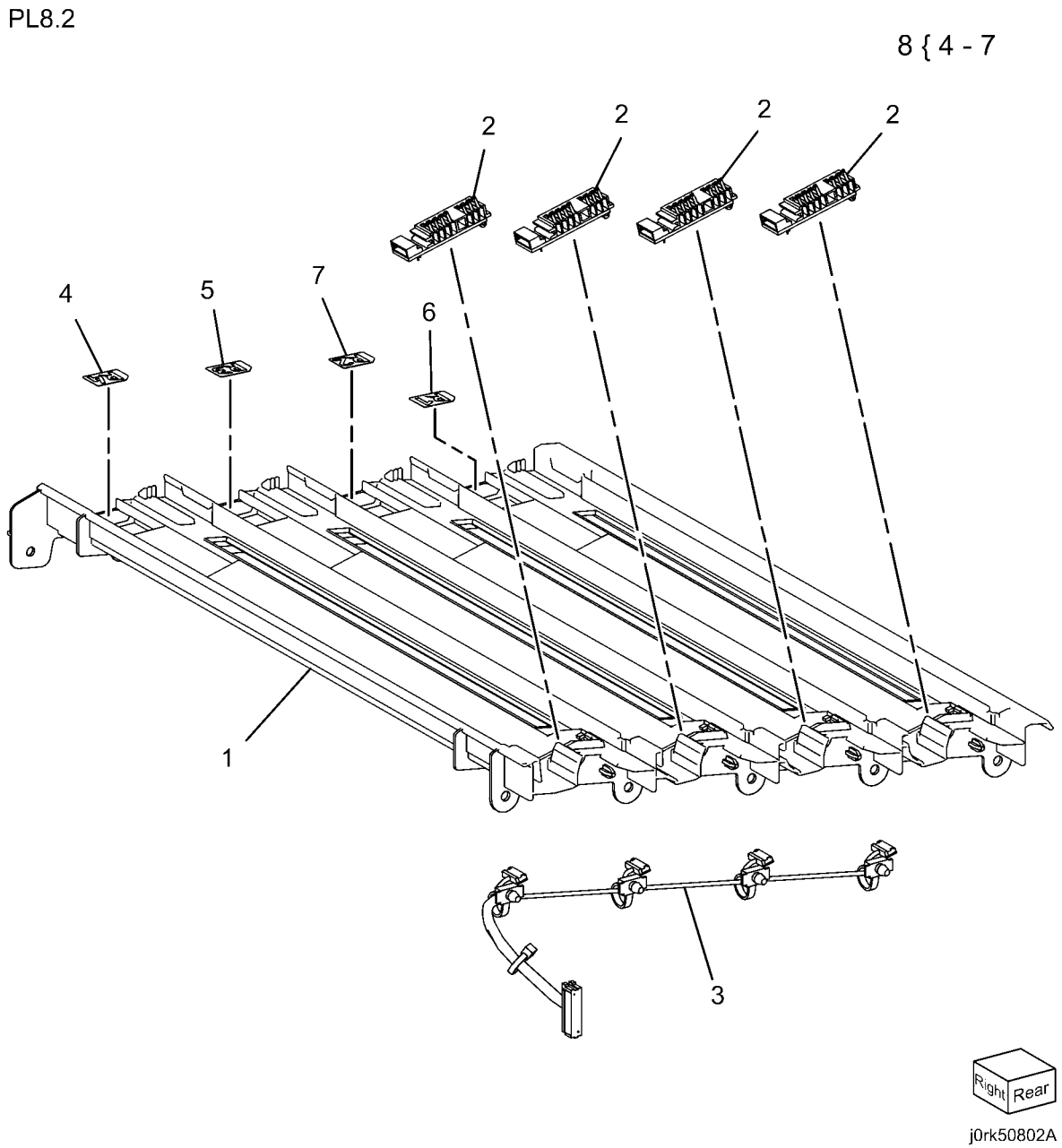

PL 8.3 2nd Frame Assembly

Item	Part	Description
1	–	Front Frame Assembly (Not Spared)
2	012K96770	Link Assembly
3	–	Plate Assembly (P/O PL 8.3 Item 2)
4	–	Rack Gear (P/O PL 8.3 Item 2)
5	–	Spring (P/O PL 8.1 Item 8)
6	–	IBT Coupling (P/O PL 8.1 Item 8)
7	803E06291	Lock Handle
8	807E32041	Lock Gear
9	807E32051	Coupling Gear
10	–	Coupling Spring (P/O PL 8.1 Item 8)
11	–	Plate Spring (P/O PL 8.1 Item 8)
12	–	Frame Cover (P/O PL 8.1 Item 8)
13	–	Lock Label (P/O PL 8.1 Item 8)
14	–	Label Cleaner (P/O PL 8.1 Item 8)

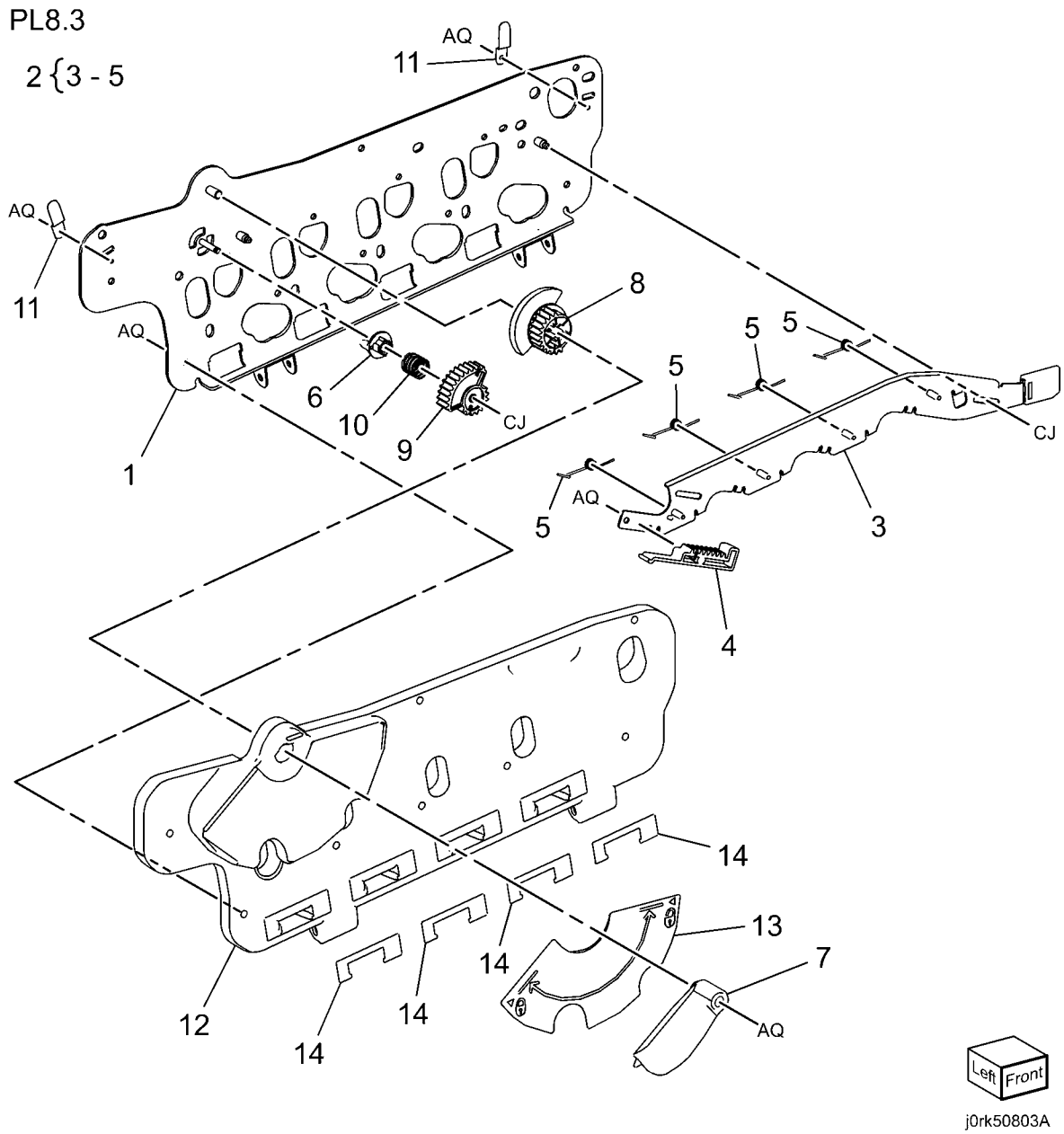

PL 9.1 Tray Assembly (1 of 2)

Item	Part	Description
1	050K65075	Tray 1/2/3/4 Assembly
2	010E93341	Slide Lock Block
3	–	Tray 1 Label (P/O PL 9.1 Item 14)
4	–	Tray 2 Label (P/O PL 9.1 Item 14)
5	–	Instruction Label (P/O PL 9.1 Item 14)
6	–	Side Size Label (Not Spared)
7	–	End Size Label (Not Spared)
8	003E76461	Front Stopper
9	059E03500	Front Left Roller
10	059E03510	Front Right Roller
11	110K11680	Paper Size Switch Assembly
12	014E45291	Slide Lock Block
13	–	Switch Bracket (Not Spared)
14	604K58451	Tray Label Kit

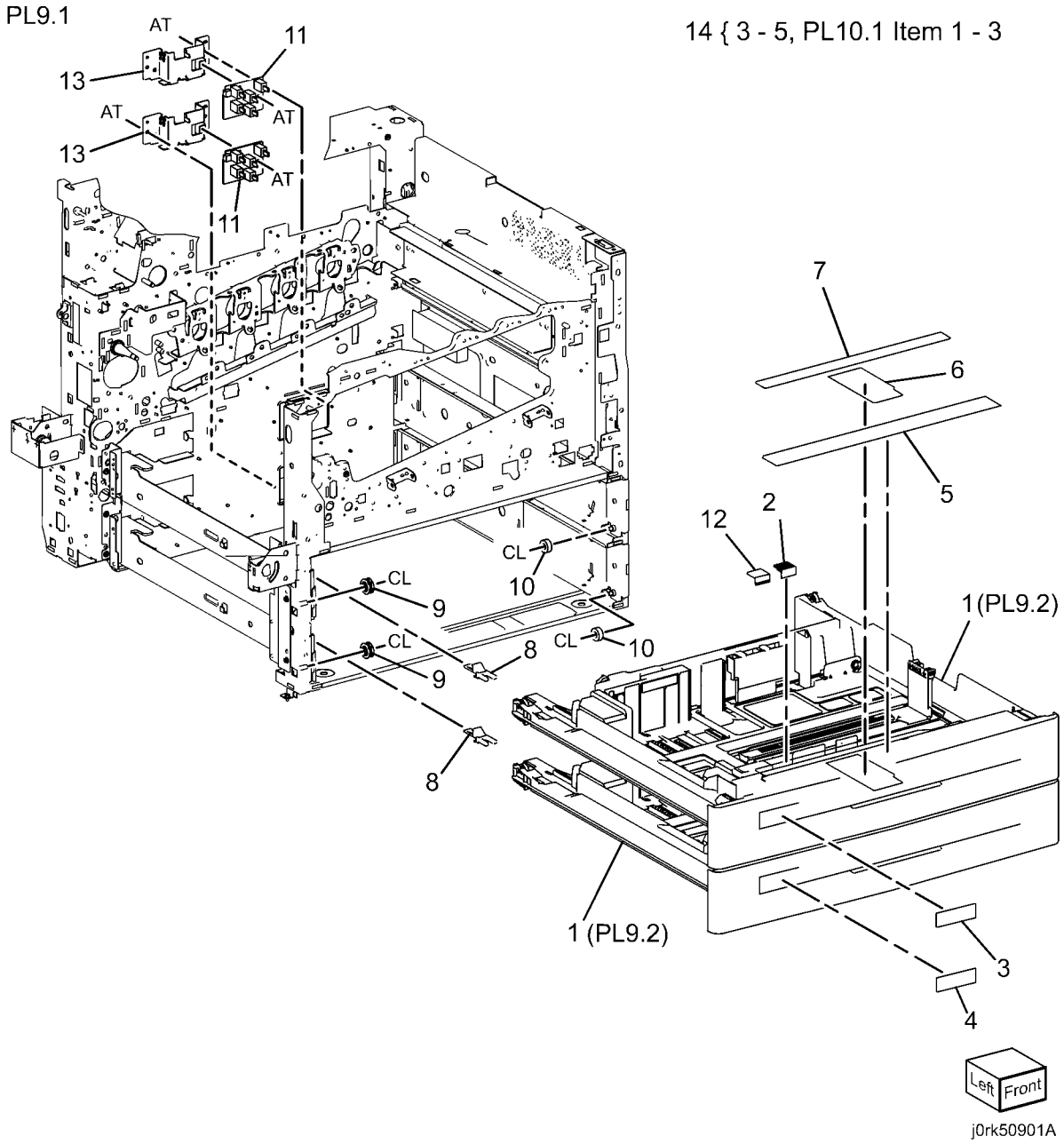

PL 9.2 Tray Assembly (2 of 2)

Item	Part	Description
1	–	Gear (13T) (P/O PL 9.1 Item 1)
2	007E78450	Gear (13/60T)
3	007E78441	Gear (60T)
4	807E13521	Pinion
5	–	End Guide Link
6	–	Bottom Pad Assembly
7	038E26533	End Guide
8	–	Front Side Guide Assembly
9	038E39090	Rear Guide
10	–	End Guide Actuator (P/O PL 9.1 Item 1)
11	–	Bottom Plate (P/O PL 9.1 Item 1)
12	059E03521	Rear Roller
13	848K40411	Front Cover Assembly (P/O PL 9.1 Item 1)
14	–	Front Trim Cover (P/O PL 9.2 Item 13)
15	–	Tray Lever (P/O PL 9.2 Item 13)
16	–	Latch
17	809E75730	Latch Spring
18	019E71680	Pad
19	848E21140	Storage Cover
20	604K20541	Gear Kit

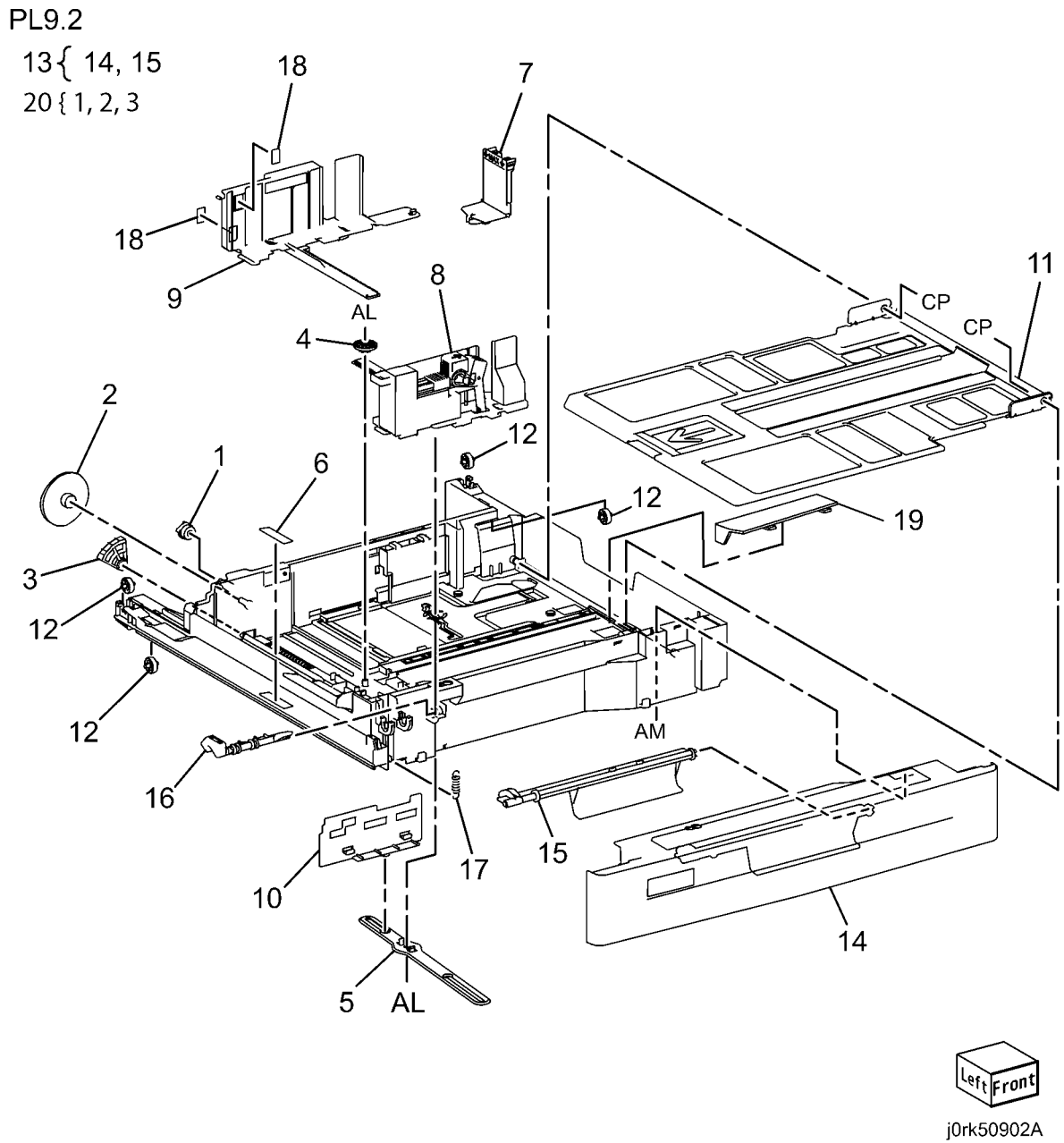

PL 9.3 Paper Transport

Item	Part	Description
1	059K66640	Feeder 1/2 Assembly (REP 7.1, REP 7.2)
2	–	Feeder Bracket (Not Spared)
3	054E33802	Feed Out Chute
4	–	Feeder Harness Holder (Not Spared)
5	–	Harness Cover (Not Spared)

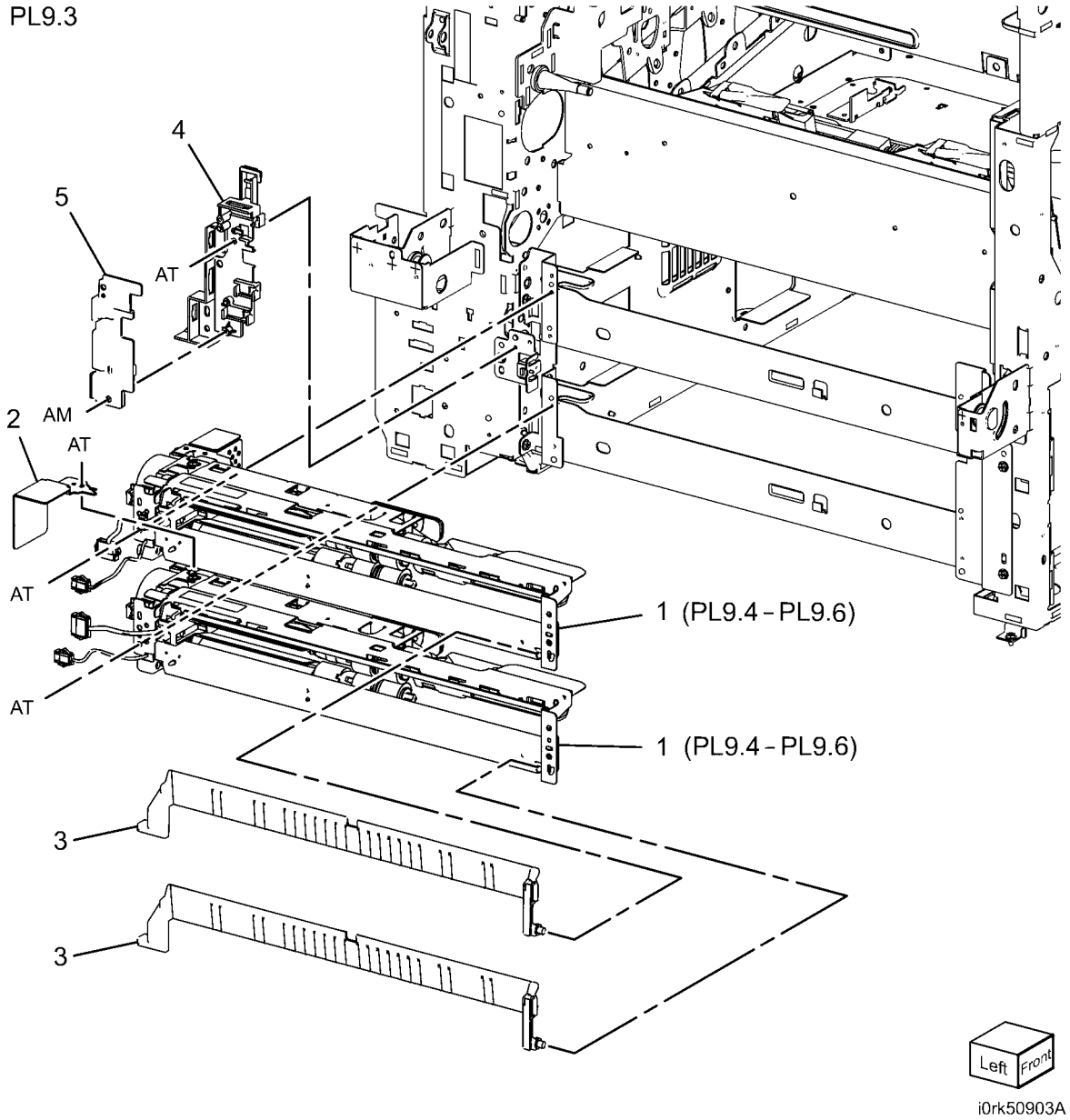

PL 9.4 Paper Feeder (1 of 3)

Item	Part	Description
1	–	Upper Frame Assembly (P/O PL 9.3 Item 1)
2	–	Lower Frame Assembly (P/O PL 9.3 Item 1)
3	–	Rear Frame (P/O PL 9.3 Item 1)
4	–	Rail (P/O PL 9.3 Item 1)
5	–	Chute (P/O PL 9.3 Item 1)
6	930W00113	No Paper Sensor, Nudger Level Sensor
7	–	Traceability Label (P/O PL 9.3 Item 1)
8	120E22481	Actuator
9	–	Holder (P/O PL 9.3 Item 1)
10	–	Lever (P/O PL 9.3 Item 1)
11	–	Upper Harness Holder (P/O PL 9.3 Item 1)
12	–	Rear Harness Holder (P/O PL 9.3 Item 1)
13	–	Feed In Chute (P/O PL 9.3 Item 1)
14	–	Sensor Harness Assembly (P/O PL 9.3 Item 1)
15	–	Spring (P/O PL 9.3 Item 1)

PL9.4

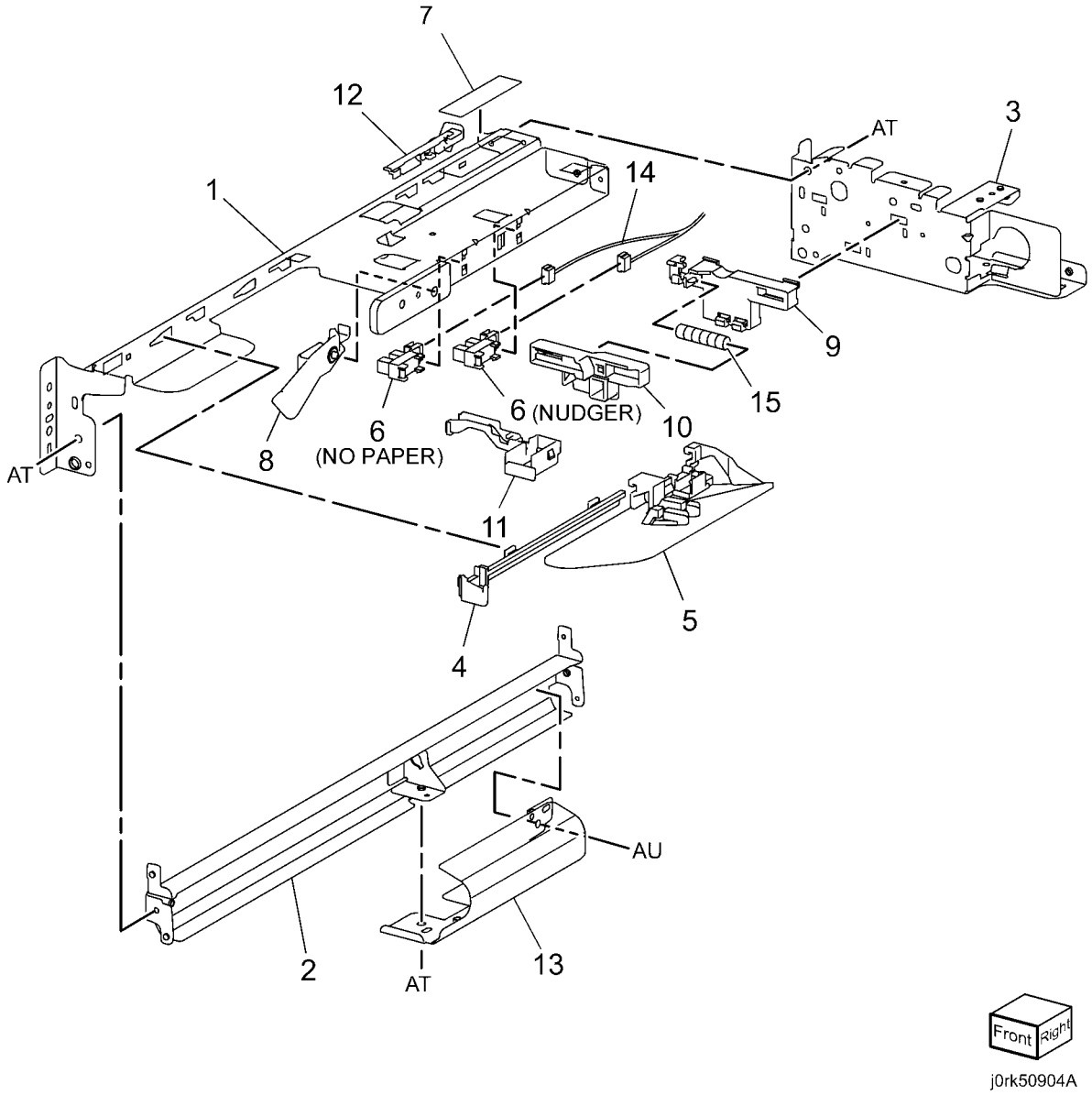

PL 9.5 Paper Feeder (2 of 3)

Item	Part	Description
1	604K56080	Tray 1/2 Feed Roll Kit (REP 7.3, REP 7.4)
2	–	Nudger Compression Spring (P/O PL 9.3 Item 1)
3	–	Retard Spring (P/O PL 9.3 Item 1)
4	–	Feed Shaft (P/O PL 9.3 Item 1)
5	–	Bearing (P/O PL 9.3 Item 1)
6	–	Sleeve Bearing (P/O PL 9.3 Item 1)
7	–	Gear (30T) (P/O PL 9.3 Item 1)
8	–	Support (P/O PL 9.3 Item 1)
9	807E20330	Gear (29T)
10	005K08820	Clutch Assembly (25T)
–	005K08680	Clutch Assembly (25T)
11	005K05890	One-way Clutch Assembly
12	–	Nudger Shaft (P/O PL 9.3 Item 1)
13	–	Gear (25T) (P/O PL 9.3 Item 1)
14	–	Retard Support (P/O PL 9.3 Item 1)
15	005K09290	Friction Clutch Assembly
16	014E45030	Spacer
17	–	Retard Shaft (P/O PL 9.3 Item 1)
18	–	Retard Bearing (P/O PL 9.3 Item 1)
19	–	Feed Roll (P/O PL 9.5 Item 1)
20	–	Nudger Roll (P/O PL 9.5 Item 1)
21	–	Retard Roll (P/O PL 9.5 Item 1)

PL9.5

1 { 19 - 21

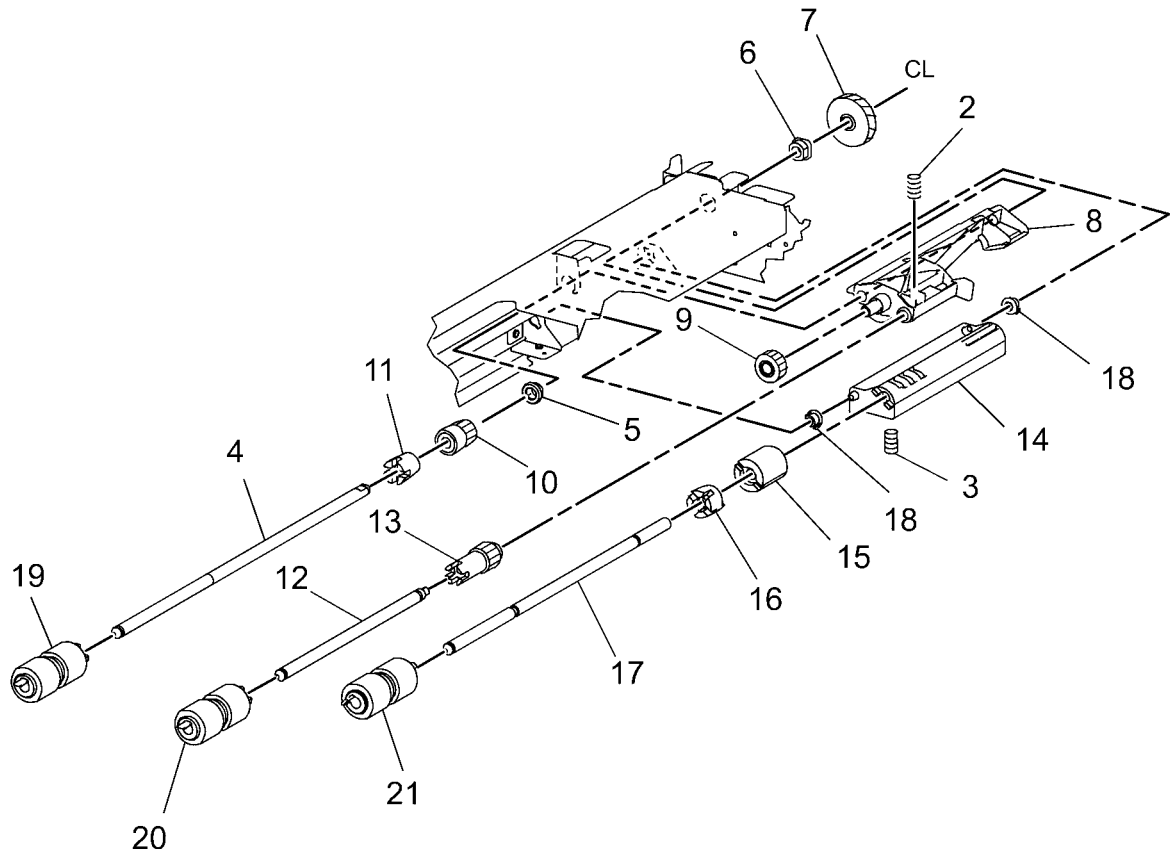

j0rk50905A

PL 9.6 Paper Feeder (3 of 3)

Item	Part	Description
1	–	Drive Bracket Assembly (P/O PL 9.3 Item 1)
2	127K52790	Feed/Lift Motor Assembly
3	–	Gear (31T) (P/O PL 9.3 Item 1)
4	–	Spacer (P/O PL 9.3 Item 1)
5	–	Bearing Shaft (P/O PL 9.3 Item 1)
6	–	Drive Shaft Assembly (P/O PL 9.3 Item 1)
7	–	Gear (13T) (P/O PL 9.3 Item 1)
8	005K83081	One Way Clutch
9	007K97870	One Way Gear
10	–	Helical Gear (25T) (P/O PL 9.3 Item 1)
11	–	Helical Gear (29/19T) (P/O PL 9.3 Item 1)
12	–	Washer (P/O PL 9.3 Item 1)
13	–	Wire Hamess Assembly (P/O PL 9.3 Item 1)
14	–	Harness Clamp (P/O PL 9.3 Item 1)
15	–	Spring (P/O PL 9.3 Item 1)

PL9.6

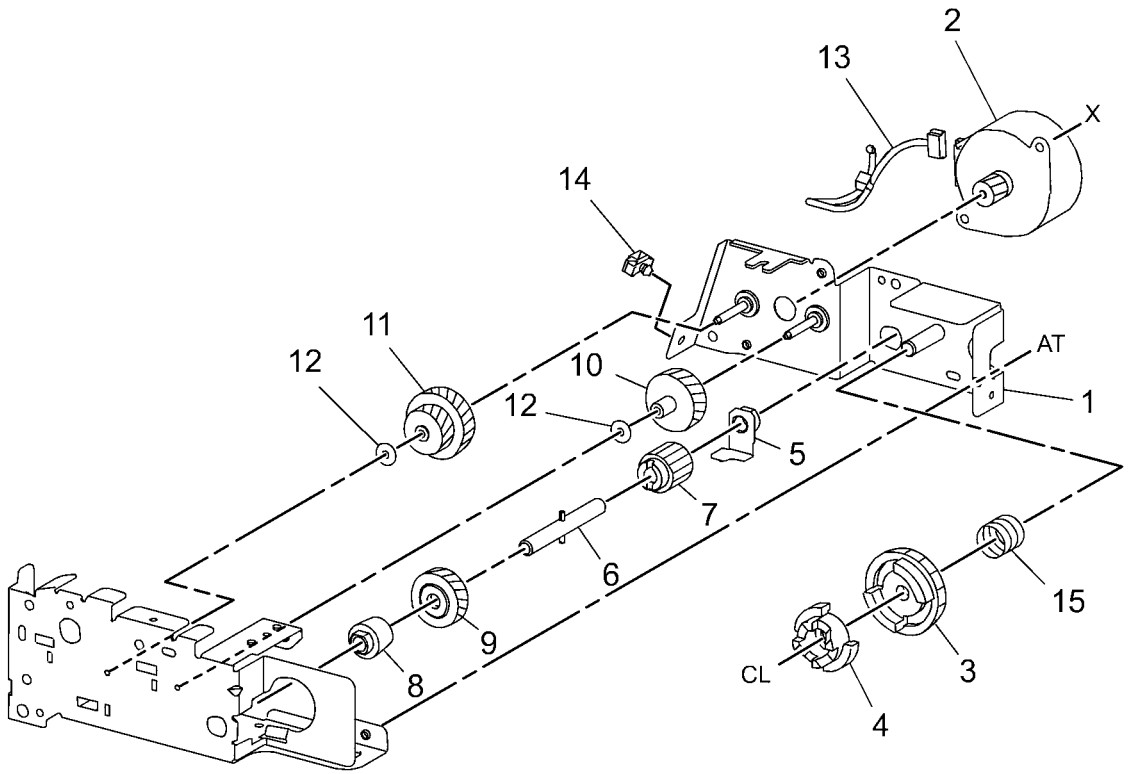

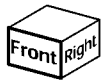

j0rk50906A

PL 9.7 Envelope Tray Assembly

Item	Part	Description
1	050K65513	Envelope Tray Assembly
2	–	Front Cover (P/O PL 9.7 Item 1)
3	–	Lever (P/O PL 9.7 Item 1)
4	003E75440	Latch
5	–	Spring
6	038E26533	End Guide
7	–	Envelope Tray Frame (P/O PL 9.7 Item 1)

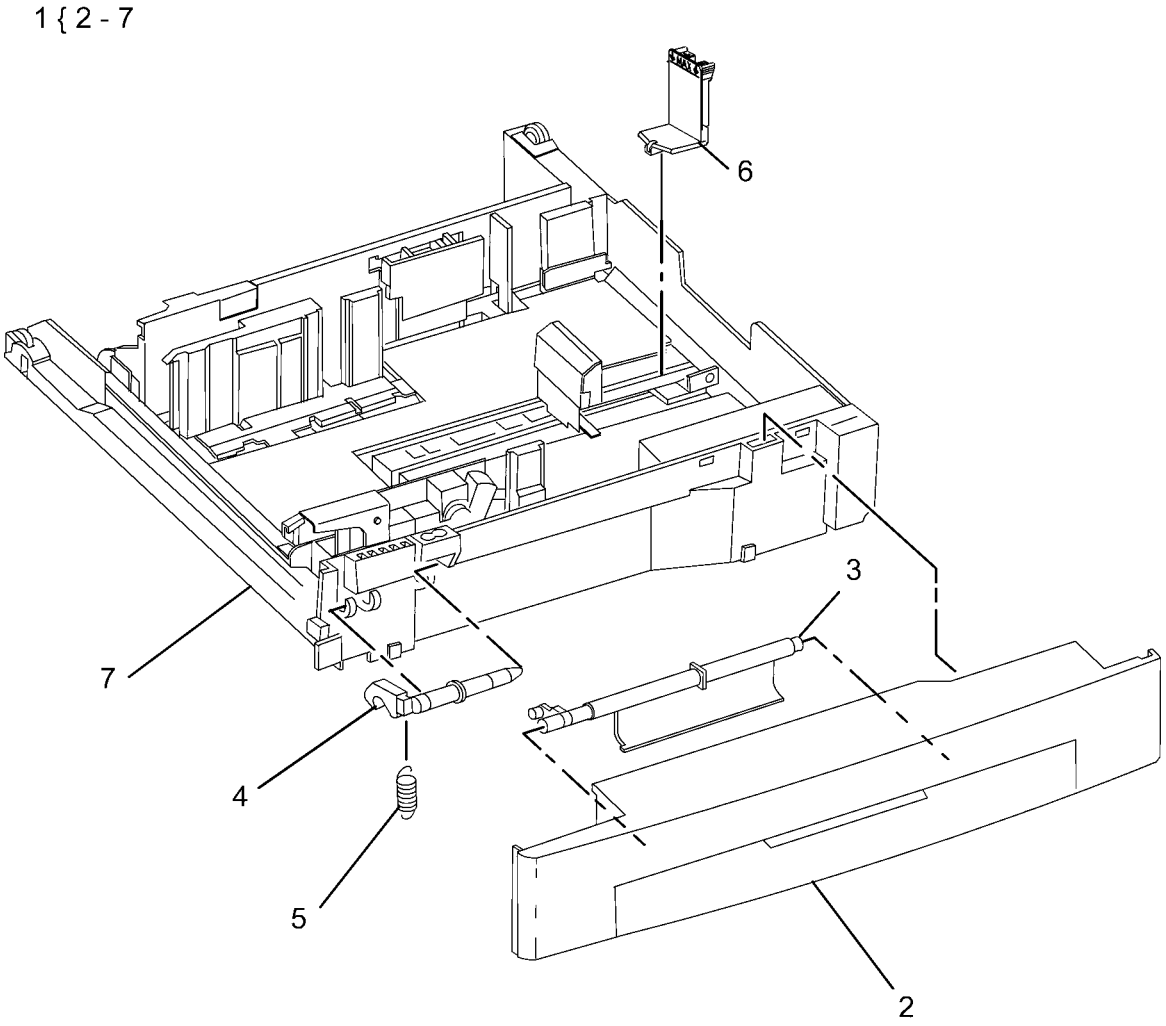

0509007A-CHG

PL 10.1 Tray Module (2T)

Item	Part	Description
1	–	Tray 3 Label (P/O PL 9.1 Item 14)
2	–	Tray 4 Label (P/O PL 9.1 Item 14)
3	–	Instruction Label (P/O PL 9.1 Item 14)
4	848E50050	Lower Tray Cover (Tray 4 Only)
5	014E59990	Slide Lock Block
6	010E93341	Slide Lock Block
7	110K11680	Paper Size Switch Sensor
8	059E03510	Front Right Roll
9	003E75431	Stopper
10	059E03500	Front Left Roll
11	–	Tray (P/O PL 9.1 Item 1)

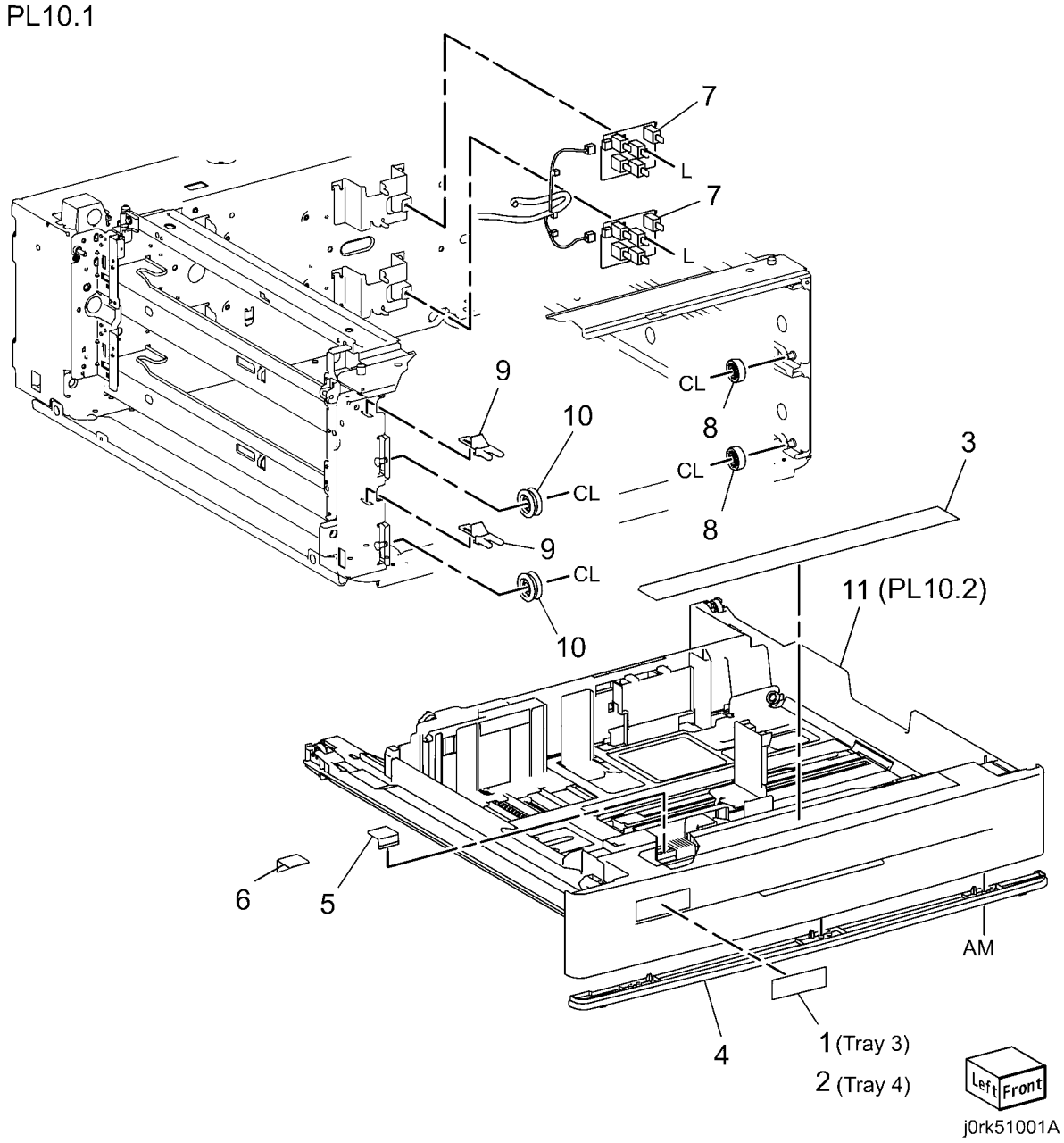

PL 10.2 Tray 3/4

Item	Part	Description
1	–	Gear (13T) (P/O PL 10.1 Item 6)
2	007E78450	Gear (13T/60T)
3	007E78441	Gear (60T)
4	807E13521	Pinion
5	–	Link
6	–	Pad
7	038E26533	End Guide
8	–	Guide Assembly
9	038E39100	Guide
10	–	End Actuator
11	–	Bottom Plate (P/O PL 10.1 Item 6)
12	059E03521	Roll
13	–	Front Cover Assembly
14	–	Front Cover (P/O PL 10.2 Item 13)
15	–	Lever (P/O PL 10.2 Item 13)
16	003E75440	Latch
17	809E75730	Latch Spring
18	019K09580	Pad
19	–	Max Label
20	604K20541	Gear Kit

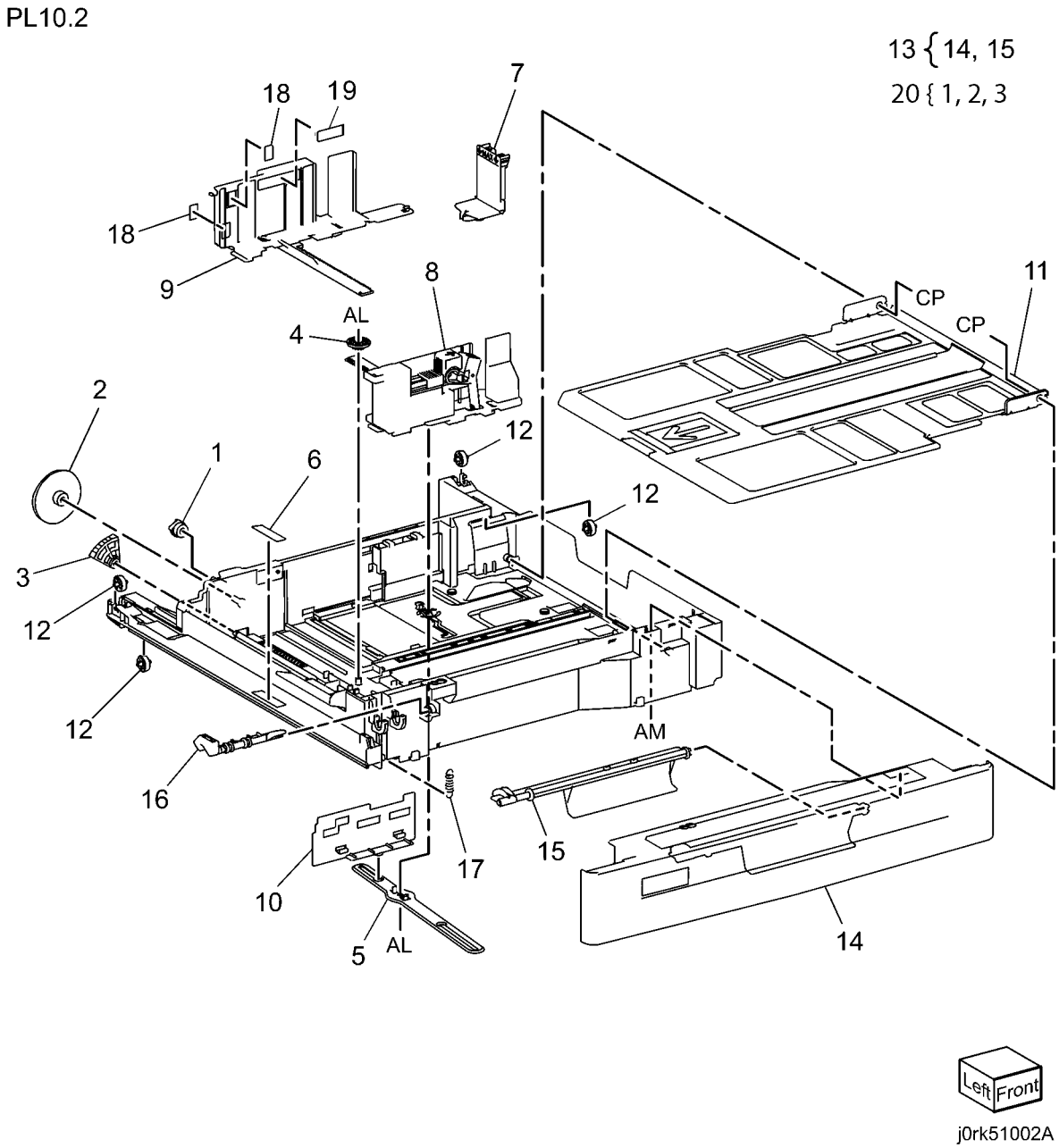

PL 10.3 Feeder/Roller

Item	Part	Description
1	–	Feeder Cover (Not Spared)
2	059K26251	Take Away Roll 3/4
3	–	Cover (Not Spared)
4	054K42091	Chute Assembly
5	–	Chute (P/O PL 10.3 Item 4)
6	–	Actuator (P/O PL 10.3 Item 4)
7	930W00111	Tray 4 Out Sensor
8	–	Spring (P/O PL 10.3 Item 4)
9	–	Wire Harness (P/O PL 10.3 Item 4)
10	054K42080	Chute Assembly
11	–	Chute (P/O PL 10.3 Item 10)
12	–	Tray 3 Out Sensor (P/O PL 10.3 Item 10)
13	–	Wire Harness (P/O PL 10.3 Item 10)
14	110E12220	Left Hand Tray Module Cover Switch
15	413W14860	Bearing
16	059K66640	Tray 3/4 Feeder Assembly (REP 7.5, REP 7.6)
17	–	Sensor Cover (Not Spared)
18	054E33802	Feed Out Chute

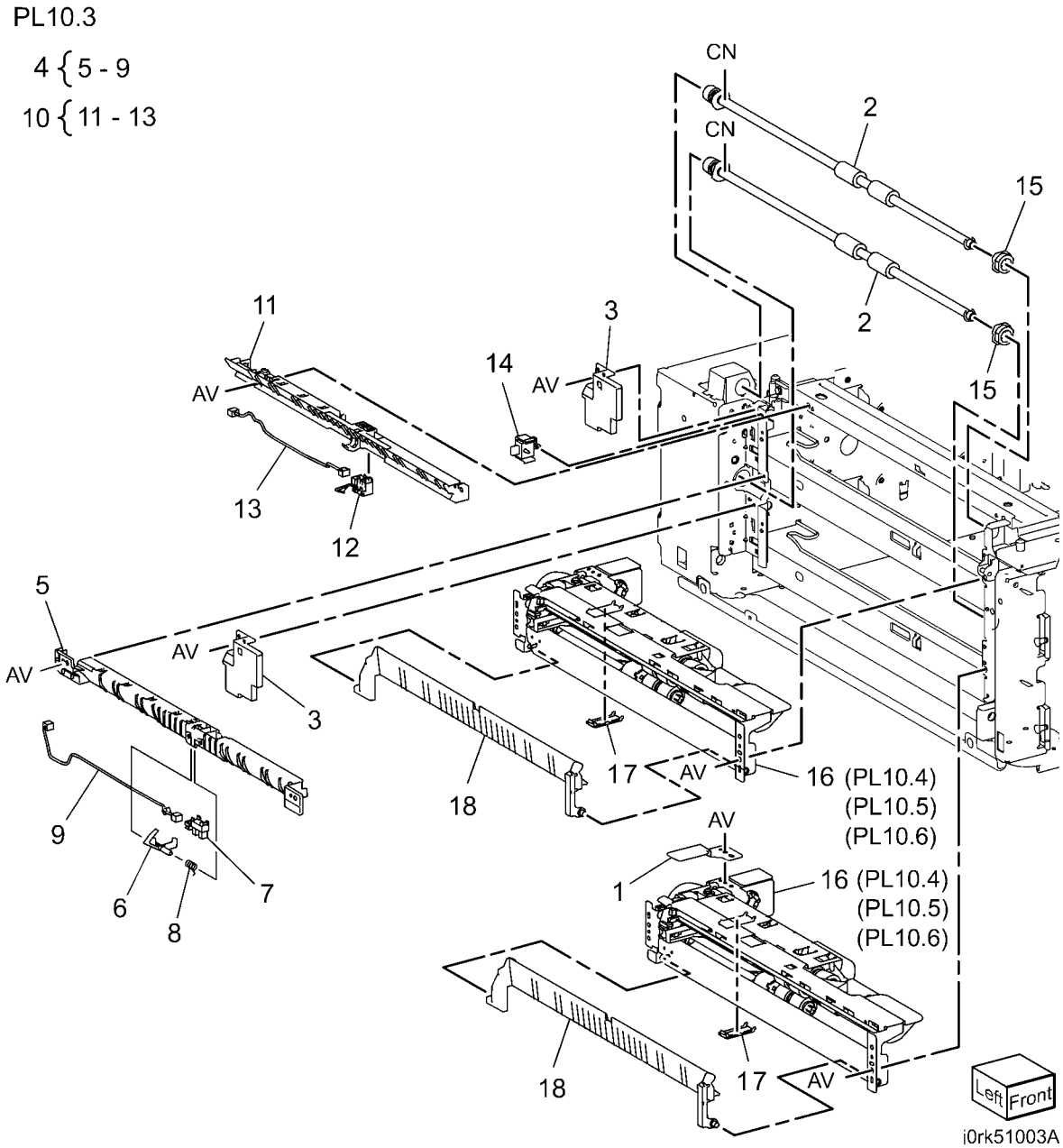

PL 10.4 Tray 3/4 Feeder Assembly (1 of 3)

Item	Part	Description
1	–	Frame (P/O PL 10.3 Item 16)
2	–	Frame (P/O PL 10.3 Item 16)
3	–	Frame (P/O PL 10.3 Item 16)
4	–	Rail (P/O PL 10.3 Item 16)
5	–	Chute (P/O PL 10.3 Item 16)
6	930W00123	Nudger Level Sensor, No Paper Sensor
7	–	Label (Not Spared)
8	120E22481	Actuator
9	–	Holder (P/O PL 10.3 Item 16)
10	–	Level (P/O PL 10.3 Item 16)
11	–	Upper Harness Holder (P/O PL 10.3 Item 16)
12	–	Rear Harness Holder (P/O PL 10.3 Item 16)
13	–	Feed In Chute (P/O PL 10.3 Item 16)
14	–	Sensor Harness Assembly (P/O PL 10.3 Item 16)
15	–	Spring (P/O PL 10.3 Item 16)

PL10.4

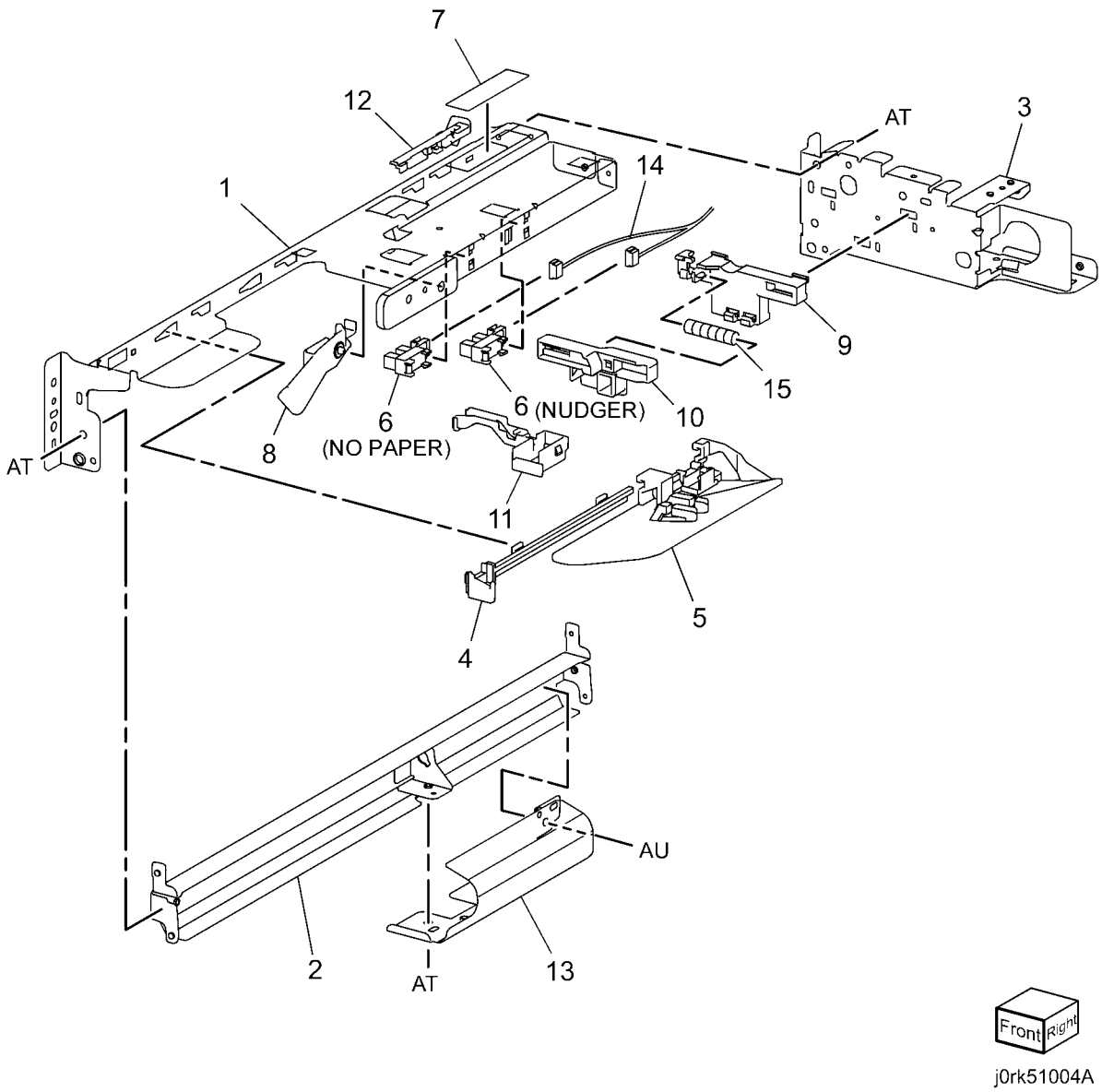

PL 10.5 Tray 3/4 Feeder Assembly (2 of 3)

Item	Part	Description
1	604K56080	Feed Roll, Nudger Roll, Retard Roll (REP 7.7, REP 8.8)
2	–	Nudger Spring (P/O PL 10.3 Item 16)
3	–	Retard Spring (P/O PL 10.3 Item 16)
4	–	Feed Shaft (P/O PL 10.3 Item 16)
5	–	Bearing (P/O PL 10.3 Item 16)
6	–	Bearing Sleeve (P/O PL 10.3 Item 16)
7	–	Gear (30T) (P/O PL 10.3 Item 16)
8	–	Support (P/O PL 10.3 Item 16)
9	807E20330	Gear (29T)
10	005K08820	Clutch Assembly (25T)
–	005K08680	Clutch Assembly (25T)
11	005K05890	One Way Clutch
12	–	Nudger Shaft (P/O PL 10.3 Item 16)
13	–	Gear (25T) (P/O PL 10.3 Item 16)
14	–	Support (P/O PL 10.3 Item 16)
15	005K09290	Friction Clutch
16	014E45030	Spacer
17	–	Retard Shaft (P/O PL 10.3 Item 16)
18	–	Retard Bearing (P/O PL 10.3 Item 16)
19	–	Feed Roll (P/O PL 10.5 Item 1)
20	–	Nudger Roll (P/O PL 10.5 Item 1)
21	–	Retard Roll (P/O PL 10.5 Item 1)

PL10.5

1 { 19 - 21

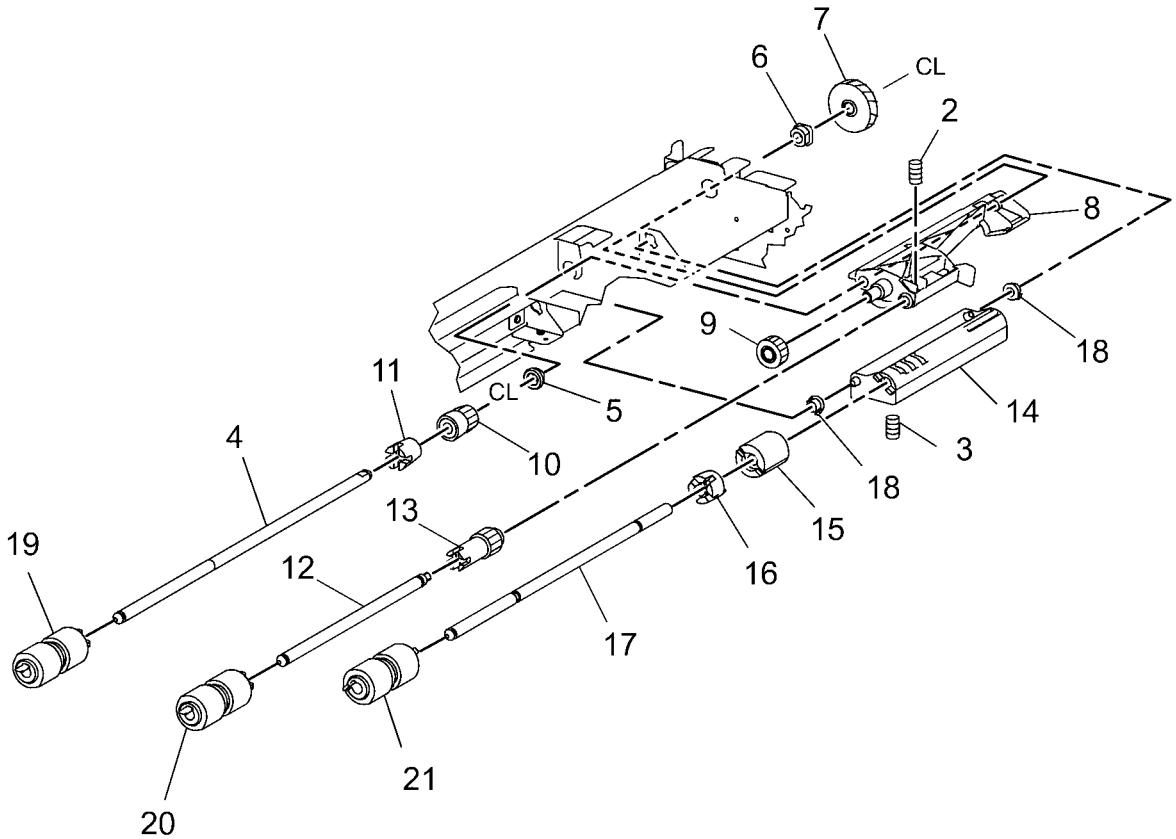

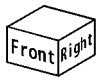

j0rk51005A

PL 10.6 Tray 3/4 Feeder Assembly (3 of 3)

PL10.6

Item	Part	Description
1	–	Bracket (P/O PL 10.3 Item 16)
2	127K52790	Feed/Lift Up Motor
3	–	Gear (31T) (P/O PL 10.3 Item 16)
4	–	Spacer (P/O PL 10.3 Item 16)
5	–	Bearing (P/O PL 10.3 Item 16)
6	–	Drive Shaft (P/O PL 10.3 Item 16)
7	–	Gear (13T) (P/O PL 10.3 Item 16)
8	005K83081	One Way Clutch
9	007K97870	One Way Gear
10	–	Gear (25T) (P/O PL 10.3 Item 16)
11	–	Gear (29T/19T) (P/O PL 10.3 Item 16)
12	–	Washer (P/O PL 10.3 Item 16)
13	–	Wire Harness (P/O PL 10.3 Item 16)
14	–	Clamp (P/O PL 10.3 Item 16)
15	–	Spring (P/O PL 10.3 Item 16)

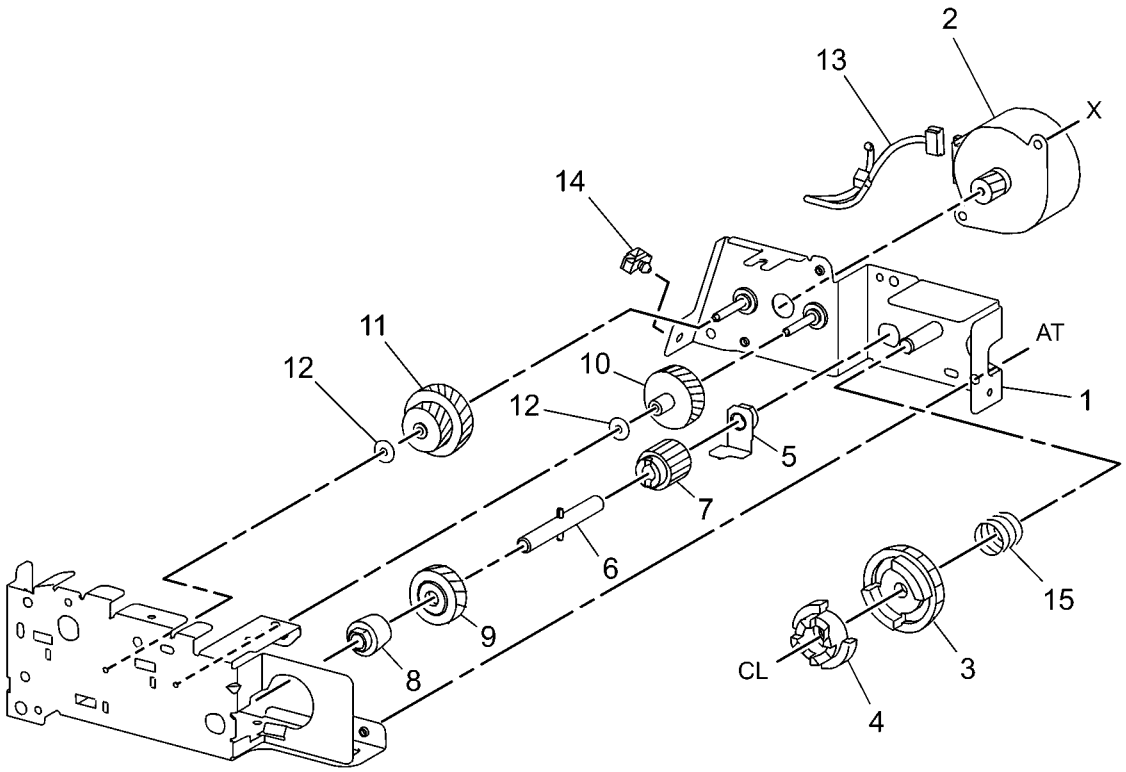

j0rk51006A

PL 10.7 Electrical

Item	Part	Description
1	807E20700	Gear (34T)
2	807E20710	Gear (26T)
3	807E20720	Gear (39T)
4	–	Take Away Motor Bracket (P/O PL 10.7 Item 13)
5	–	Take Away Motor (P/O PL 10.7 Item 13)
6	–	Gear (P/O PL 10.7 Item 13)
7	960K49613	Tray Module PWB
8	–	I/F Harness Assembly (Not Spared)
9	–	Sensor Harness Assembly (Not Spared)
10	–	Feed/Lift Up Motor Harness Assembly (Not Spared)
11	–	Take Away Motor Harness Assembly (P/O PL 10.7 Item 13)
12	–	Docking Bracket (Not Spared)
13	604K58360	Take Away Motor Kit
14	–	Gear Kit

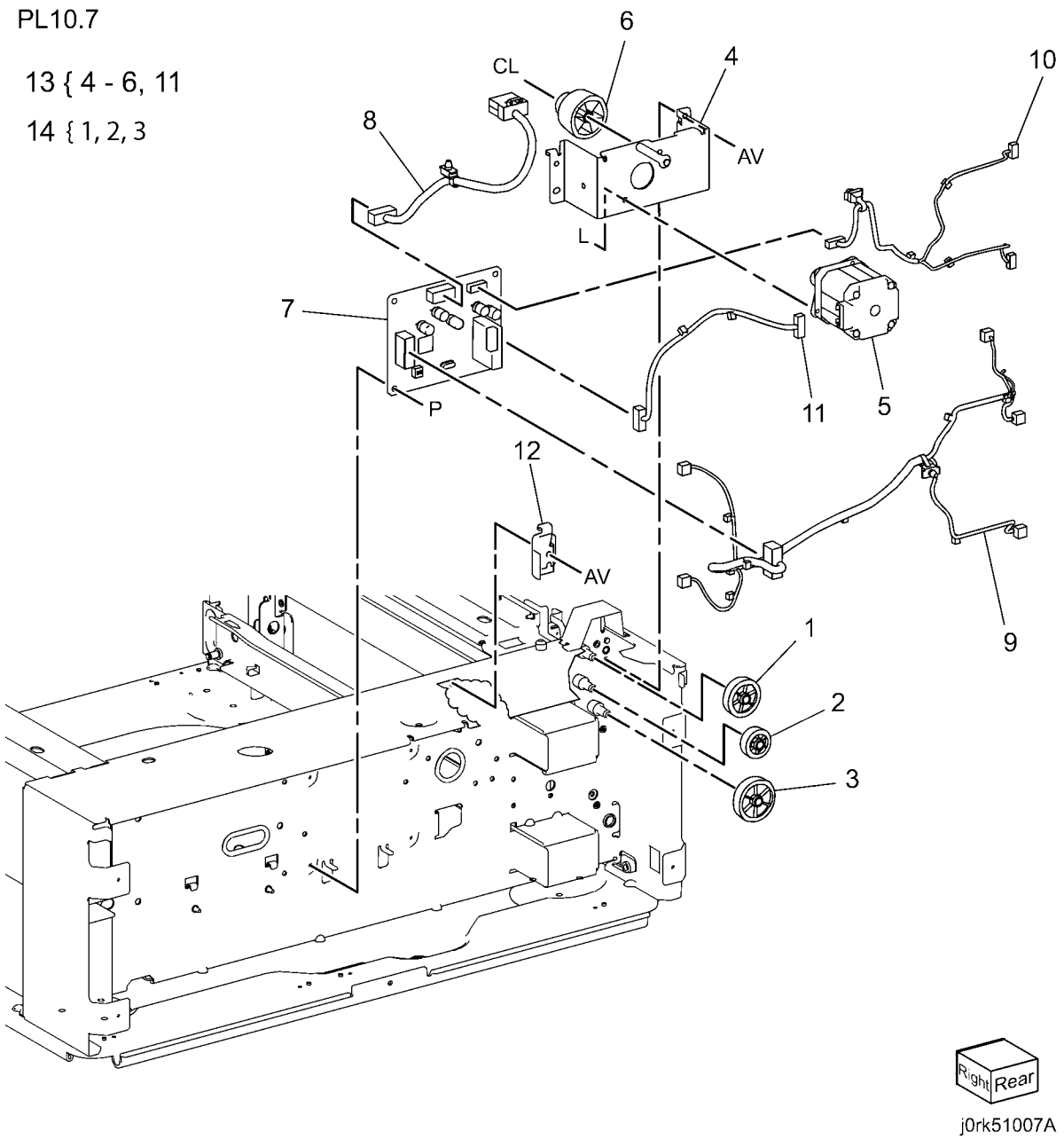

PL 10.8 Covers

Item	Part	Description
1	017K94910	Adjuster Foot Assembly
2	848E52692	Side Foot Cover
3	868E51270	Side Foot Bracket
4	–	Swivel Caster Assembly (P/O PL 10.8 Item 12)
5	–	Caster Assembly (P/O PL 10.8 Item 13)
6	–	Screw (P/O PL 10.8 Item 12, PL 10.8 Item 13)
7	–	Right Cover (Not Spared)
8	–	Top Cover (Not Spared)
9	–	Left Cover (Not Spared)
10	–	Right Cover (Not Spared)
11	848K37443	Left Hand Cover Assembly
12	604K58370	Swivel Caster Kit
13	604K58460	Caster Kit

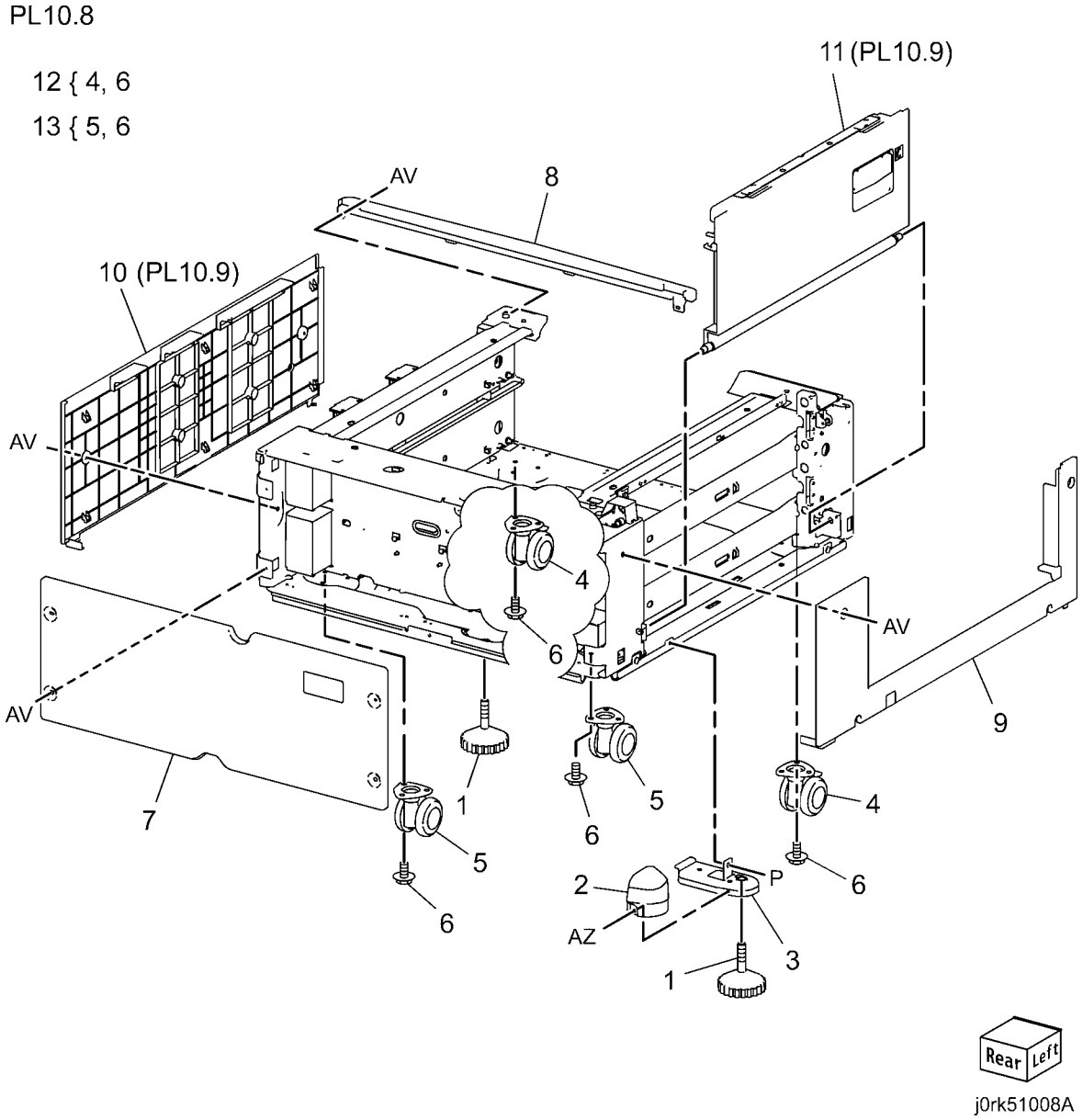

PL 10.9 Left Hand Cover

Item	Part	Description
1	–	Left Hand Cover (P/O PL 10.8 Item 11)
2	–	Handle (P/O PL 10.8 Item 11)
3	–	Chute (P/O PL 10.8 Item 11)
4	–	Latch (P/O PL 10.8 Item 11)
5	–	Hook (P/O PL 10.8 Item 11)
6	–	Pinch Roll (P/O PL 10.8 Item 11)
7	–	Pinch Shaft (P/O PL 10.8 Item 11)
8	–	Spring (P/O PL 10.8 Item 11)
9	–	Pinch Spring (P/O PL 10.8 Item 11)
10	–	Gasket (P/O PL 10.8 Item 11)

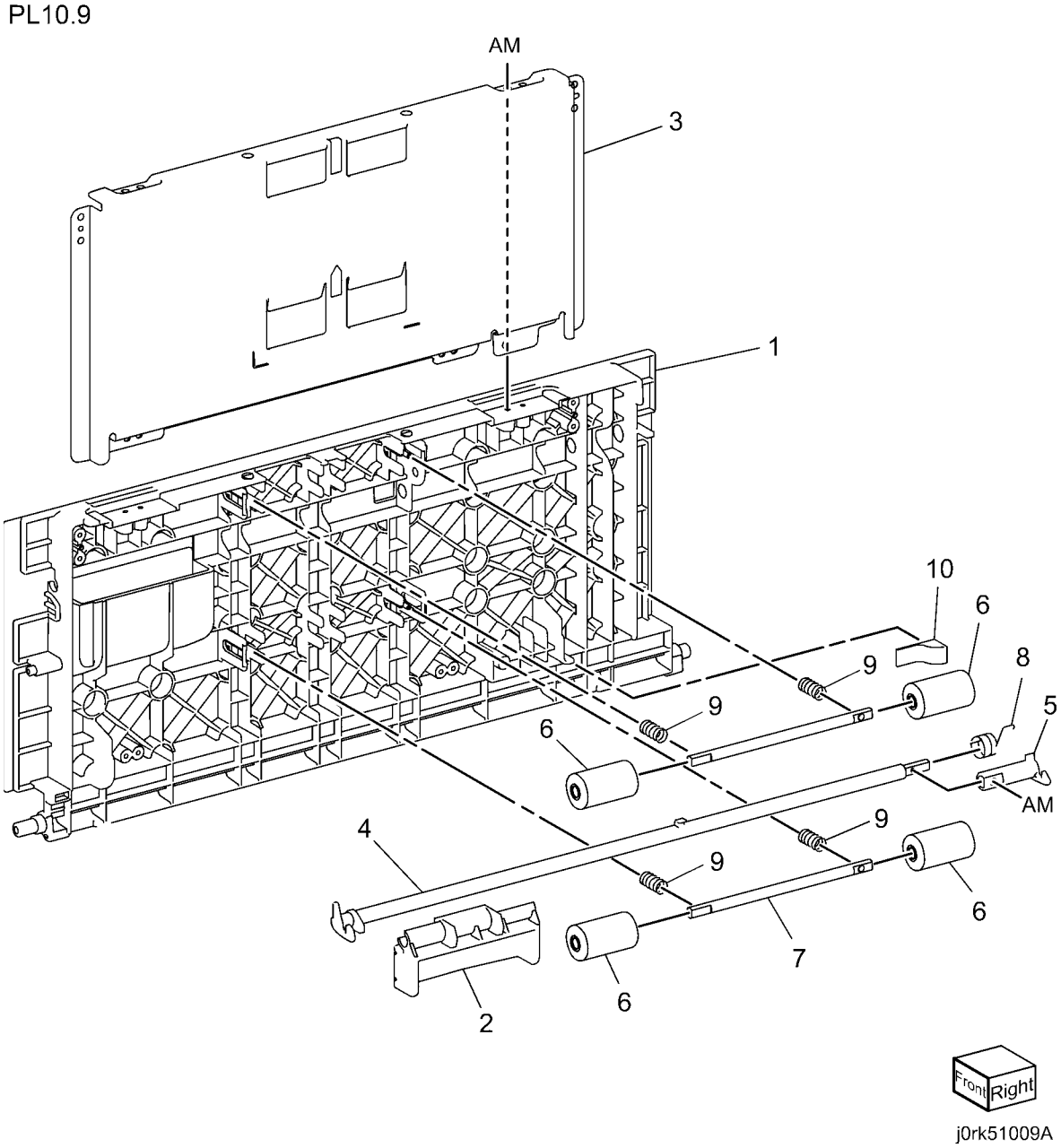

PL 13.1 MSI Feeder Assembly

Item	Part	Description
1	059K66802	MSI Feeder Assembly (REP 7.9)
2	–	Frame Assembly Lower (P/O PL 13.1 Item 1)
3	–	Upper MSI Frame (P/O PL 13.1 Item 1)
4	120E32540	Actuator
5	–	MSI Chute (P/O PL 13.1 Item 1)
6	–	Spring (P/O PL 13.1 Item 1)
7	–	Low Chute (P/O PL 13.1 Item 1)
8	–	Front MSI Handle (P/O PL 13.1 Item 1)
9	–	Max Label (P/O PL 13.1 Item 11)
10	–	Instruction Label (P/O PL 13.1 Item 11)
11	604K58400	Label Kit

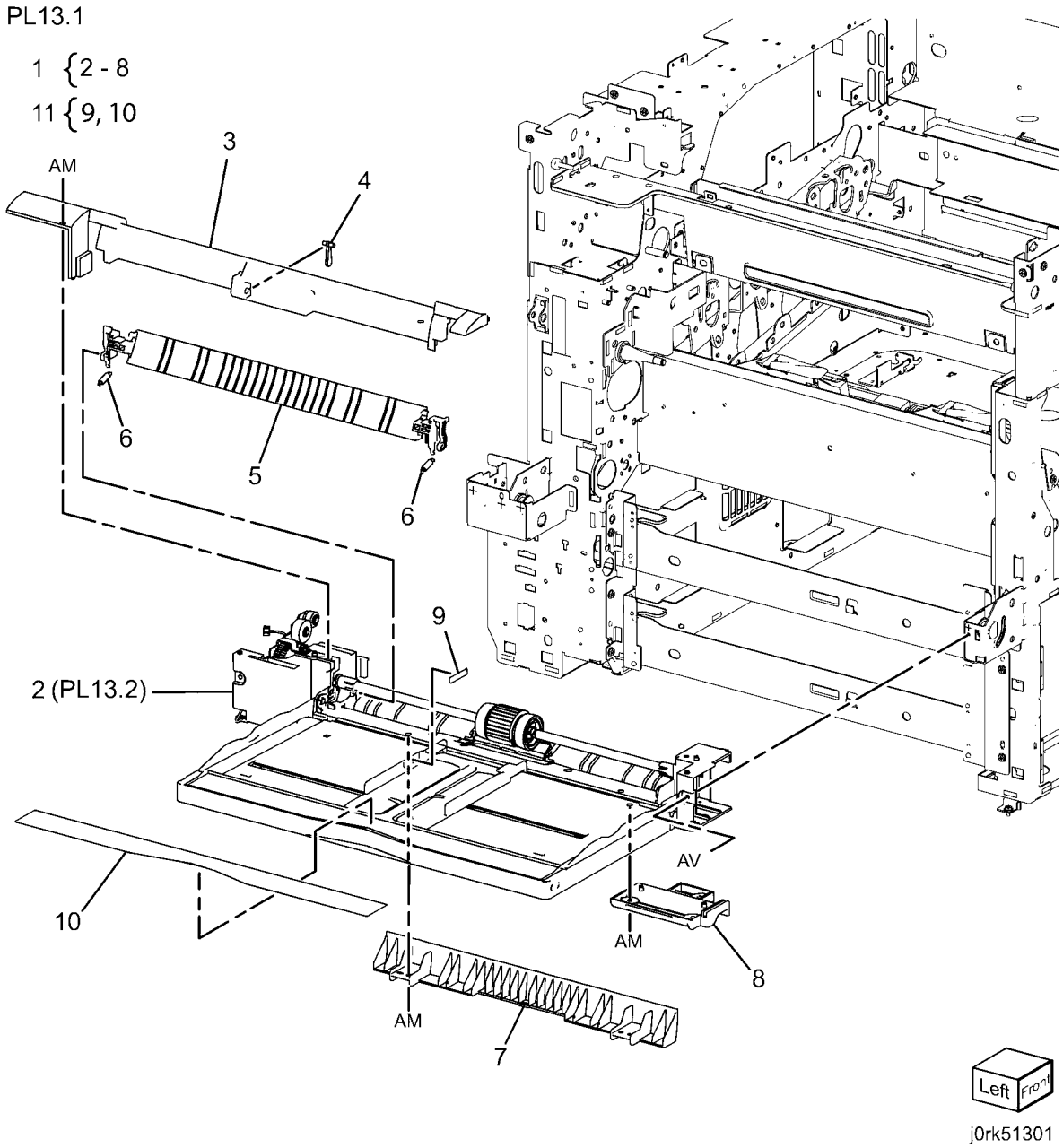

PL 13.2 Lower Frame Assembly

Item	Part	Description
1	–	Lower MSI Frame (P/O PL 13.1 Item 1)
2	059K66550	Feed Roll Assembly (REP 7.10)
3	059K66541	Feed Roller (REP 7.10)
4	–	Feed Shaft Assembly (P/O PL 13.2 Item 2)
5	–	Lift Up Right Cam (P/O PL 13.1 Item 1)
6	–	Lift Up Front Cam (P/O PL 13.1 Item 1)
7	019K09420	MSI Retard Pad Assembly
8	–	Retard Shaft (P/O PL 13.1 Item 2)
9	–	Pad Spring (P/O PL 13.2 Item 1)
10	–	Bottom Plate Assembly
11	–	Spring (P/O PL 13.1 Item 1)
12	–	Drive Bracket Assembly
13	121E92780	Feed Solenoid
14	–	Cam Gear
15	–	Pick Up Gear
16	–	Lever Stopper
17	–	Drive Lever
18	–	Lever Gear Spring (P/O PL 13.1 Item 1)
19	–	MSI Spring (P/O PL 13.1 Item 1)
20	–	MSI Paper Guide (P/O PL 13.1 Item 1)
21	–	Earth Plate (P/O PL 13.1 Item 1)
22	930W00123	Photo Sensor
23	413W14860	Plastic Bearing Sleeve
24	–	Cam Gear Spring (P/O PL 13.1 Item 1)
25	–	MSI Harness Assembly (P/O PL 13.1 Item 1)
26	050K65080	MSI Tray Assembly

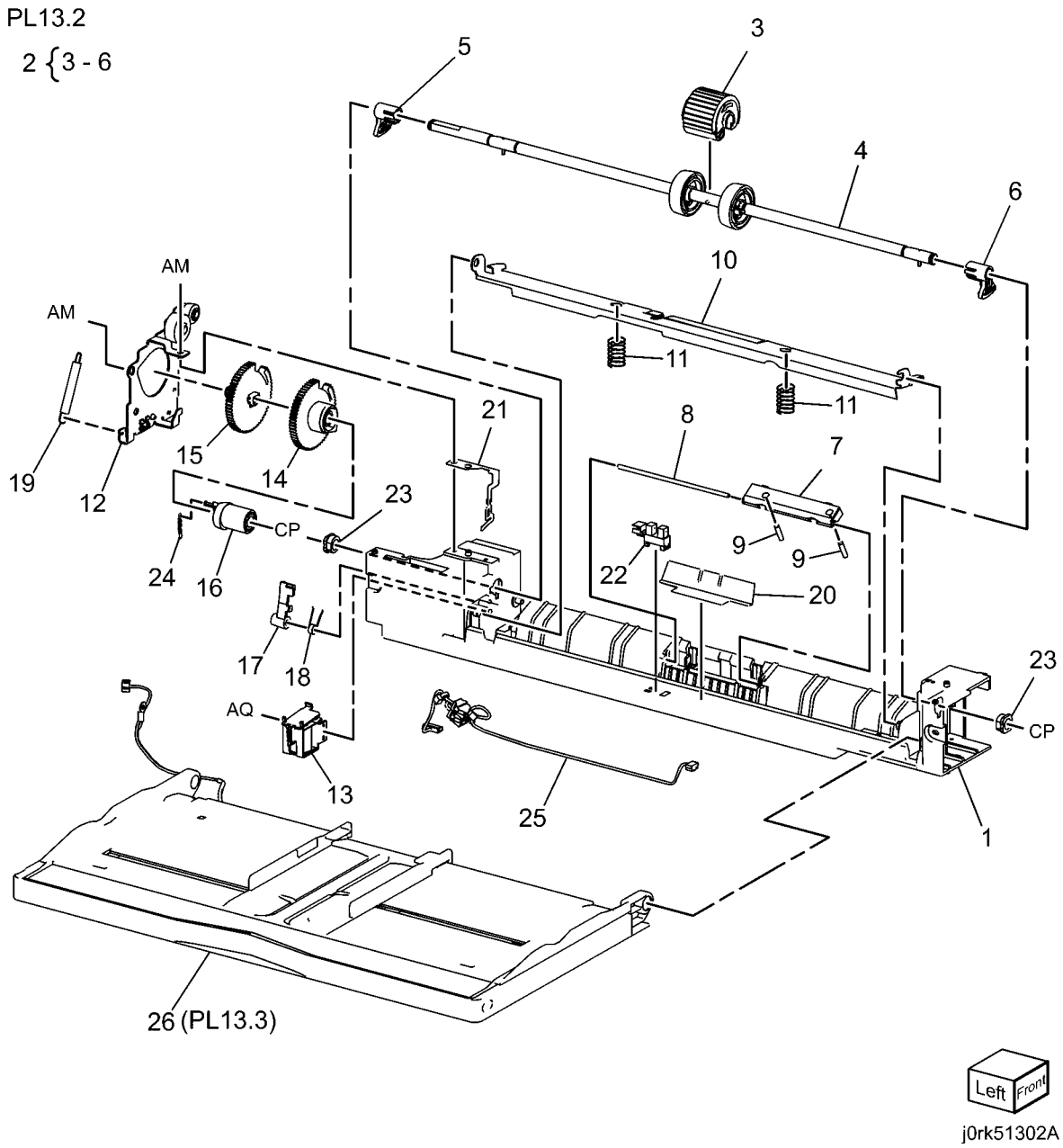

PL 13.3 Lower Tray Assembly

Item	Part	Description
1	–	MSI Tray (P/O PL 13.2 Item 26)
2	–	Front Rack (P/O PL 13.2 Item 26)
3	–	Rear Rack (P/O PL 13.2 Item 26)
4	130K70660	MSI Paper Size Sensor (REP 7.11)
5	–	Size Sensor (P/O PL 13.3 Item 4)
6	–	Sensor Support (P/O PL 13.3 Item 4)
7	007E79700	Gear Pinion
8	–	Side Front Guide (Not Spared)
9	–	Rear Guide (Not Spared)
10	–	Tray Cover (P/O PL 13.2 Item 26)
11	–	Extension Tray (P/O PL 13.2 Item 26)
12	809E49930	Sensor Spring
13	012E11760	Sensor Link
14	–	MSI Size Harness Assembly (P/O PL 13.2 Item 26)

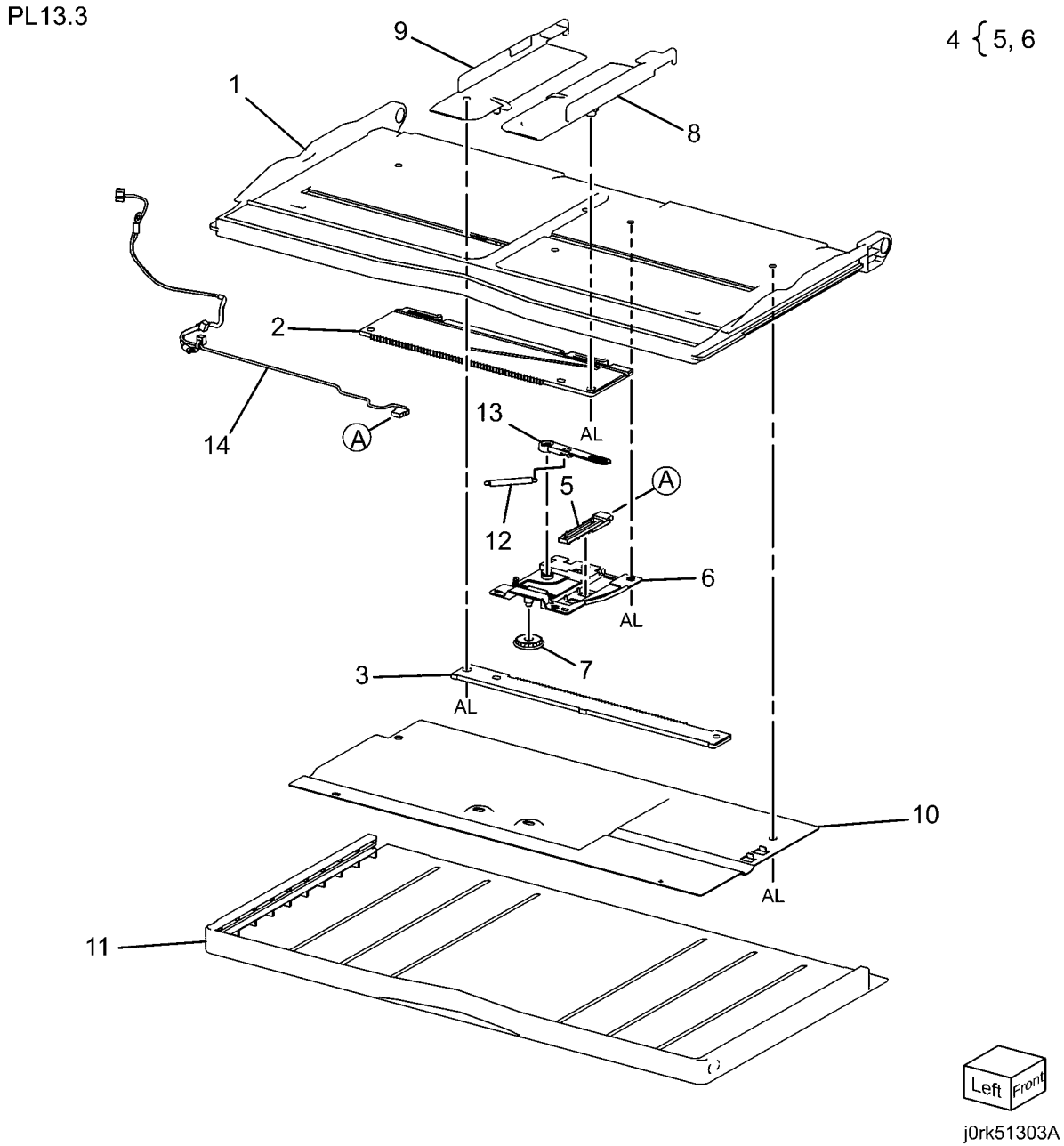

PL 14.1 Left Hand Assembly (1 of 4)

Item	Part	Description
1	–	Interlock Switch Bracket (P/O PL 14.1 Item 3)
2	–	Switch (P/O PL 14.1 Item 3)
3	110K17080	Interlock Switch Assembly
4	848K69820	Left Hand Cover Assembly (REP 14.1)
5	896E89601	Label

PL14.1

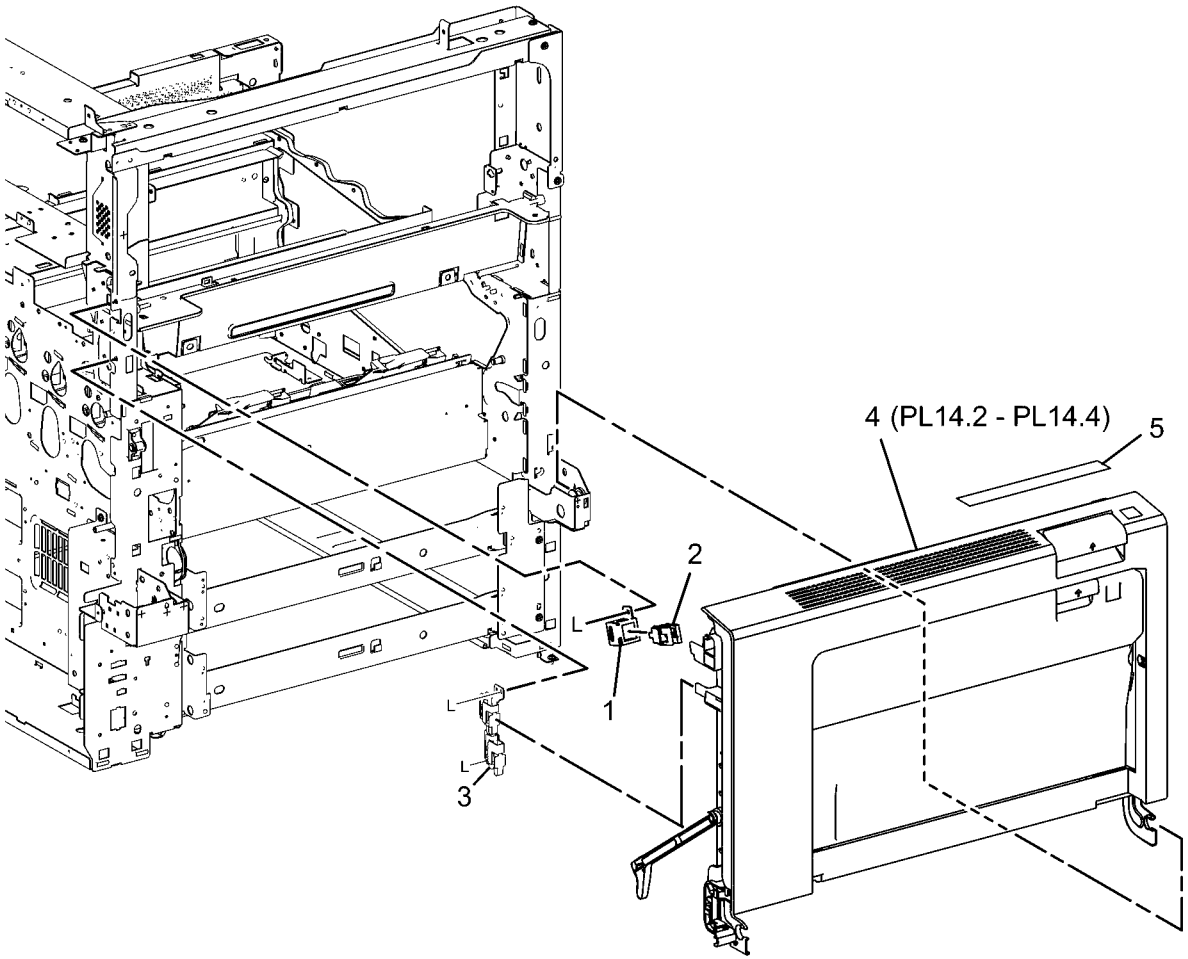

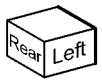

j0rk51401A

PL 14.2 Left Hand Assembly (2 of 4)

Item	Part	Description
1	–	Left Frame Assembly (Not Spared)
2	–	Left Cover
3	–	Inside Harness Guide (Not Spared)
4	–	Outside Harness Guide (Not Spared)
5	–	Left Frame Assembly (Not Spared)
6	011E24160	Front Lever Latch
7	011E24180	Rear Lever Latch
8	–	Latch Plate (Not Spared)
9	120E32490	Left Hand Actuator
10	120E32500	Actuator
11	–	Spring
12	849E95630	Left Rear Support
13	868E48840	Left Front Support
14	–	Left Harness Assembly
15	–	Door Label (Not Spared)
16	–	Left Frame Assembly (Not Spared)
17	–	Tray Lock
18	–	Lock Spring

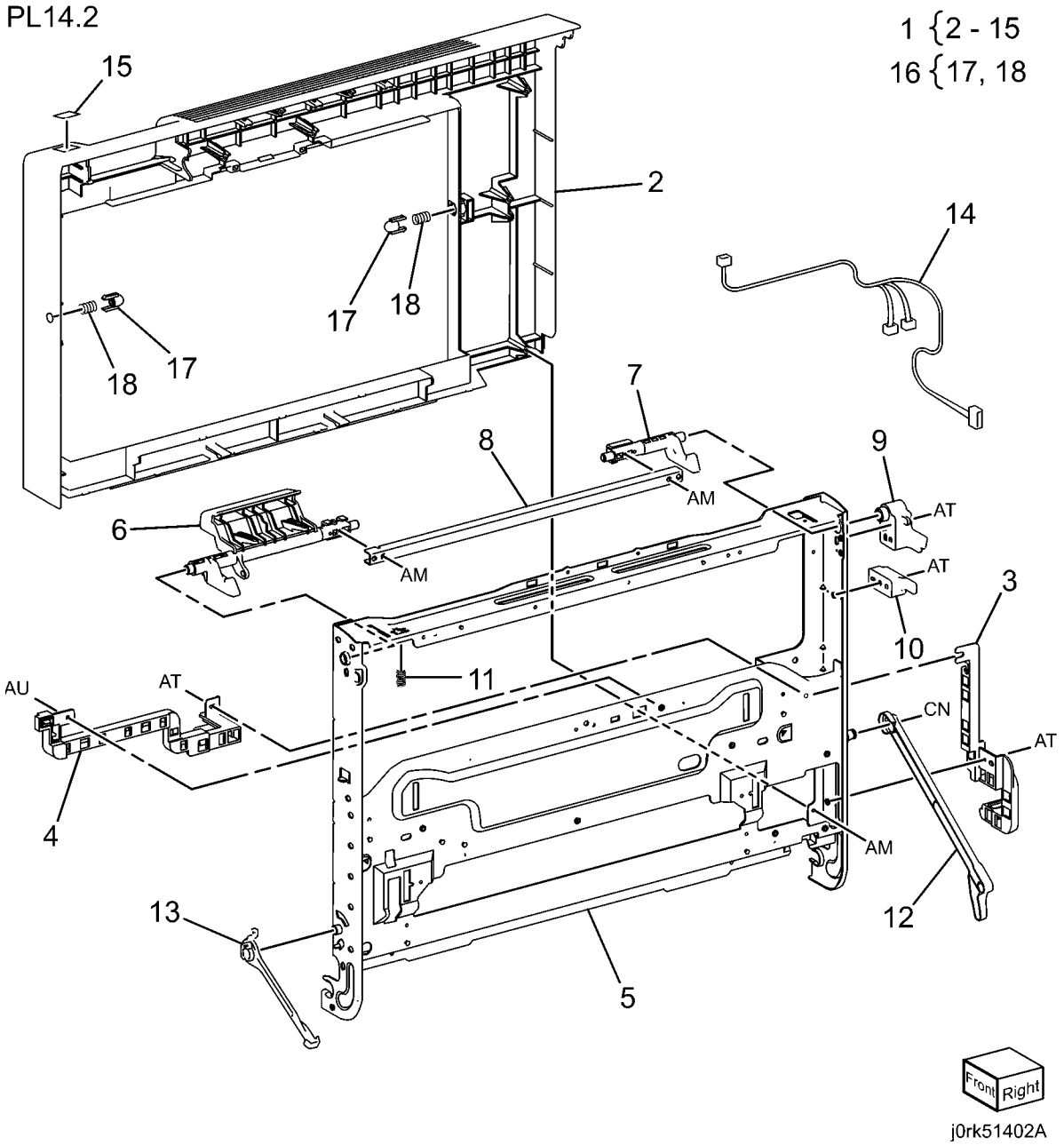

PL 14.3 Left Hand Assembly (3 of 4)

Item	Part	Description
1	–	Left Frame Assembly (Not Spared)
2	054K42320	Pinch Chute Assembly
3	–	Pinch Chute Support (P/O PL 14.3 Item 1)
4	–	Compression Spring (P/O PL 14.3 Item 1)
5	054K42300	Take Away Pinch Chute Assembly
6	–	Take Away Pinch Chute Bracket (P/O PL 14.3 Item 1)
7	–	Left Frame Assembly (Not Spared)
8	–	Sensor Holder (Not Spared)
9	–	Reference Sensor Assembly (Not Spared)
10	–	Exit Connector (Not Spared)
11	–	Conductor Housing (Not Spared)

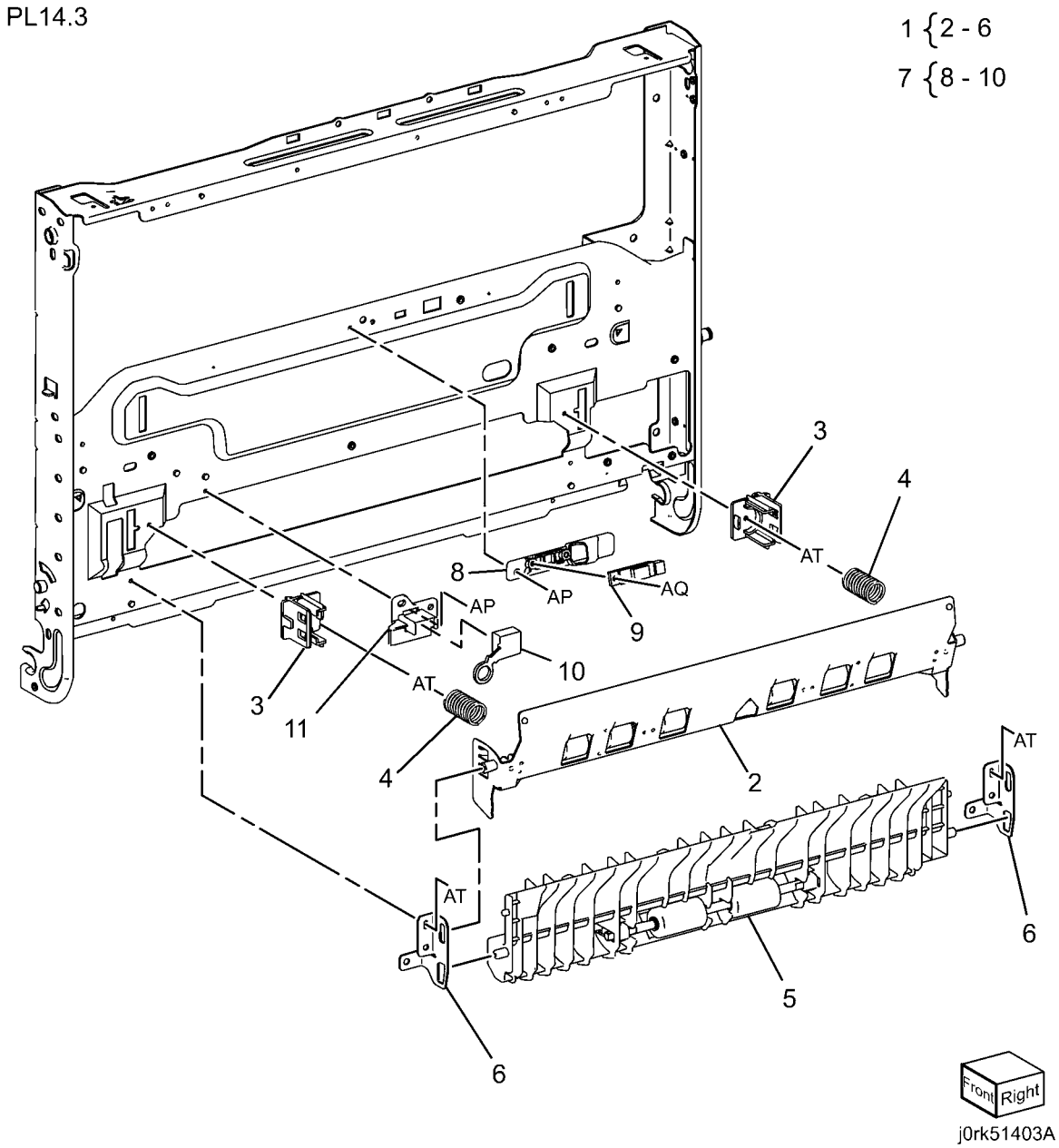

PL 14.4 Left Hand Assembly (4 of 4)

Item	Part	Description
1	–	Left Frame Assembly (Not Spared)
2	059K75050	Duplex Transport Assembly
3	054E34164	Left Cover Chute
4	848K38910	Duplex Cover Assembly
5	–	Duplex Cover (P/O PL 14.4 Item 4)
6	–	Duplex Lever (P/O PL 14.4 Item 4)
7	–	Lever Cover (P/O PL 14.4 Item 4)
8	–	Spring (P/O PL 14.4 Item 4)
9	049K03370	Duplex Bracket Assembly
10	898E25020	Caution Clutch Label

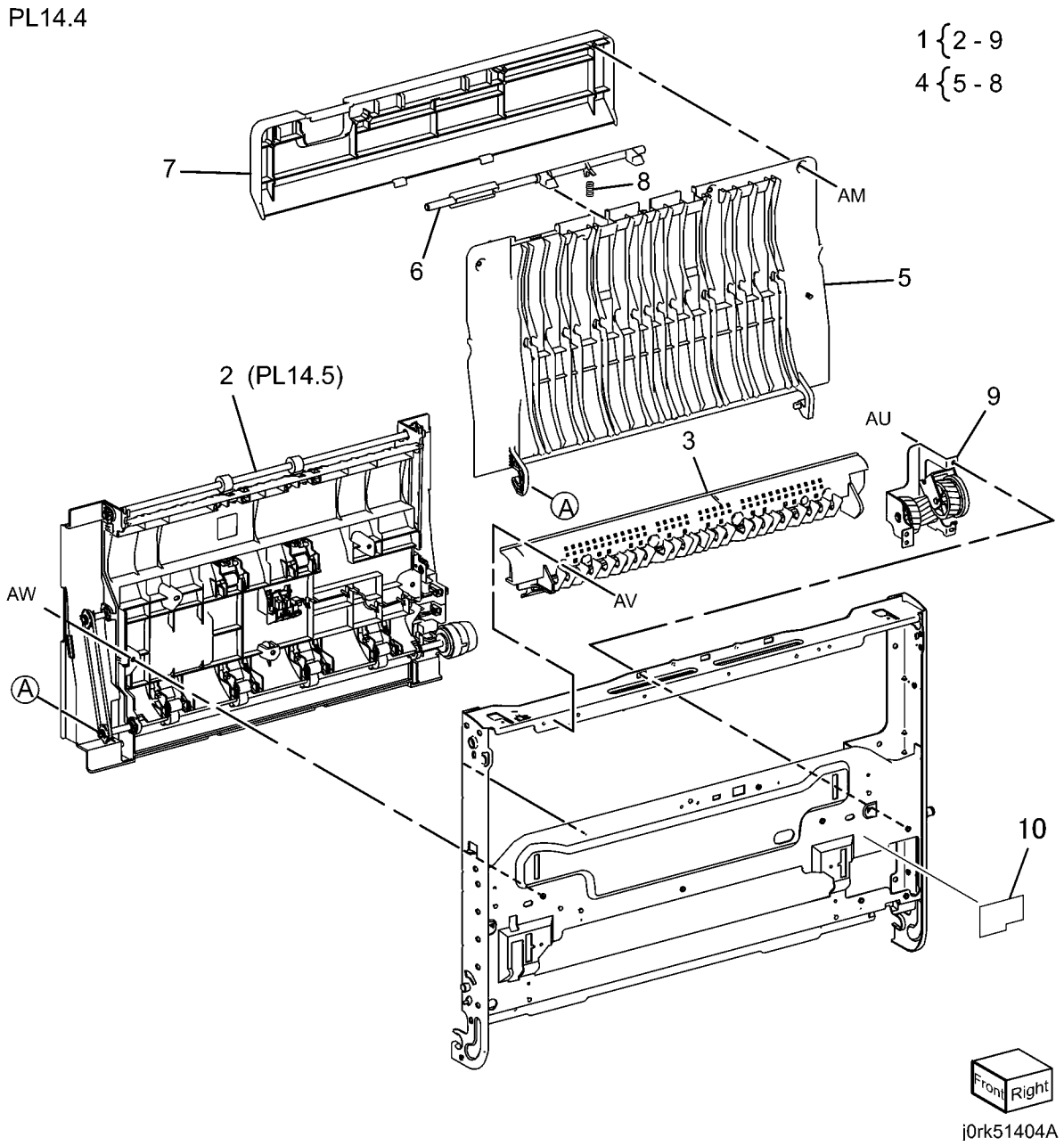

PL 14.5 Duplex Assembly

Item	Part	Description
1	059K75050	Duplex Transport Assembly
2	–	Duplex Roll 1 Assembly (P/O PL 14.5 Item 1)
3	–	Duplex 2 Roller Assembly (P/O PL 14.5 Item 1)
4	–	Duplex Roll 3 Assembly (P/O PL 14.5 Item 1)
5	–	Duplex Pinch Roll Assembly (P/O PL 14.5 Item 1)
6	023E27550	Duplex Belt 1
7	023E27560	Duplex Belt 2
8	–	Pulley (P/O PL 14.5 Item 1)
9	930W00123	Duplex Wait Sensor
10	–	Actuator Spring (P/O PL 14.5 Item 1)
11	–	Bearing Sleeve (P/O PL 14.5 Item 1)
12	–	Harness Assembly (P/O PL 14.5 Item 1)
13	–	Connector (P/O PL 14.5 Item 1)
14	413W14660	Bearing Sleeve
15	121K46400	Duplex Clutch Assembly
16	–	Pinch Spring (P/O PL 14.5 Item 1)
17	–	Pinch Spring
18	–	Actuator (P/O PL 14.5 Item 1)
19	–	Frame (P/O PL 14.5 Item 1)
20	803E11980	Stopper
21	005E33020	Clutch Assembly
22	803E11700	Stopper

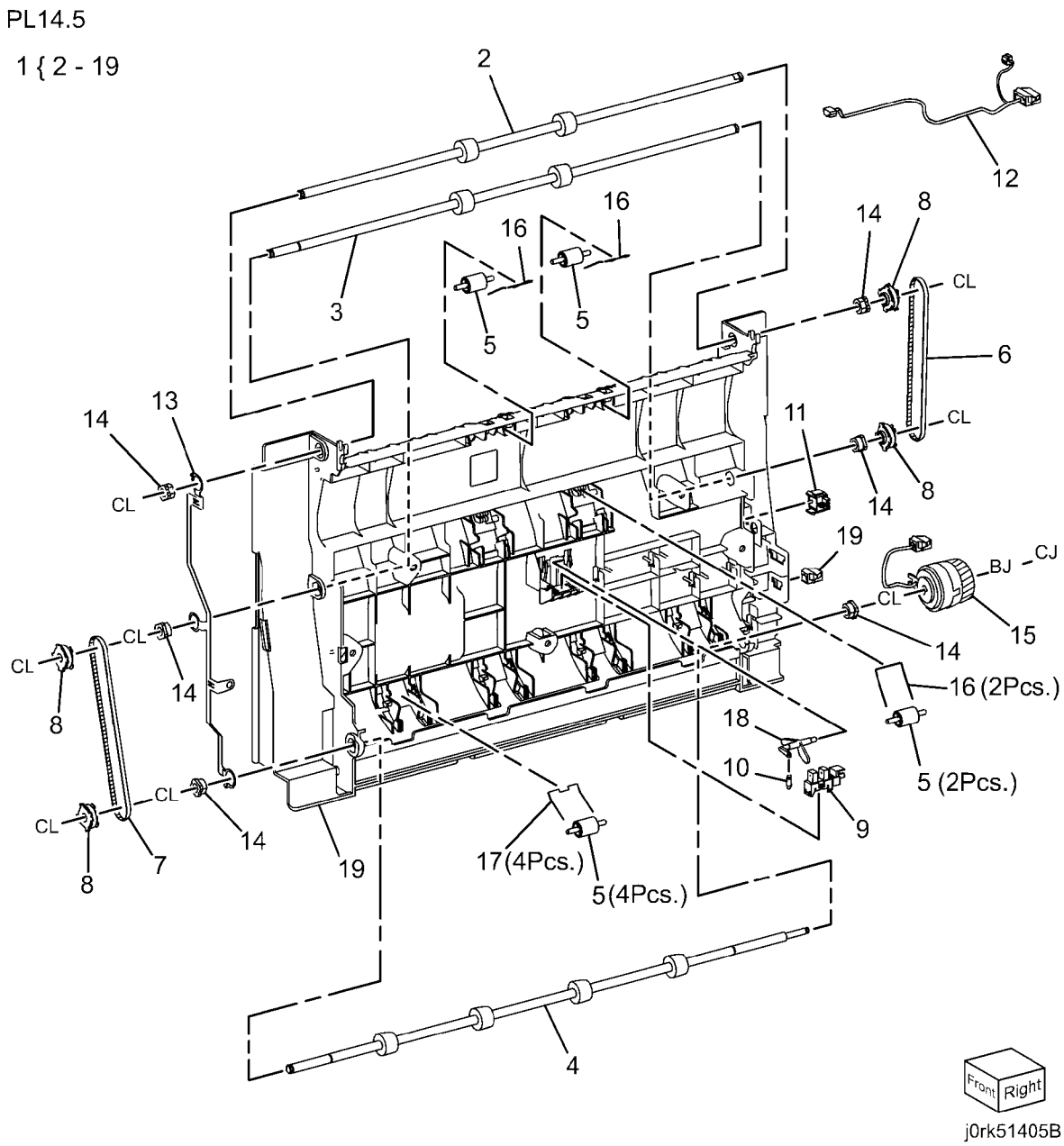

PL 15.1 Registration Transport Assembly

Item	Part	Description
1	059K66930	Registration Transport Assembly (REP 8.1)
2	121K41242	Take Away Drive Clutch Assembly
3	–	Take Away Shaft (P/O PL 15.1 Item 22)
4	–	Gear (40T) (P/O PL 15.1 Item 22)
5	–	Bearing (P/O PL 15.1 Item 22)
6	–	Take Away Bearing (P/O PL 15.1 Item 22)
7	–	Take Away Bracket (P/O PL 15.1 Item 7)
8	059K66560	High Take Away Roll Assembly
9	–	Roller Assembly (P/O PL 15.1 Item 8)
10	–	Gear (16T) (P/O PL 15.1 Item 8)
11	–	Rear Bearing (P/O PL 15.1 Item 8)
12	–	Gear (29/20T) (Not Spared)
13	–	Gear (33T) (Not Spared)
14	–	Gear (29T) (Not Spared)
15	–	Plastic Bearing Sleeve (Not Spared)
16	054K42330	Fold Out Chute Assembly
17	–	Registration Cover Connector (Not Spared)
18	110E11580	Idler Switch
19	–	Idler Bracket (Not Spared)
20	–	Rivet (Not Spared)
21	848K38900	Left Low Cover Assembly
22	–	Registration Idler Gear Assembly (Not Spared) (REP 8.2)

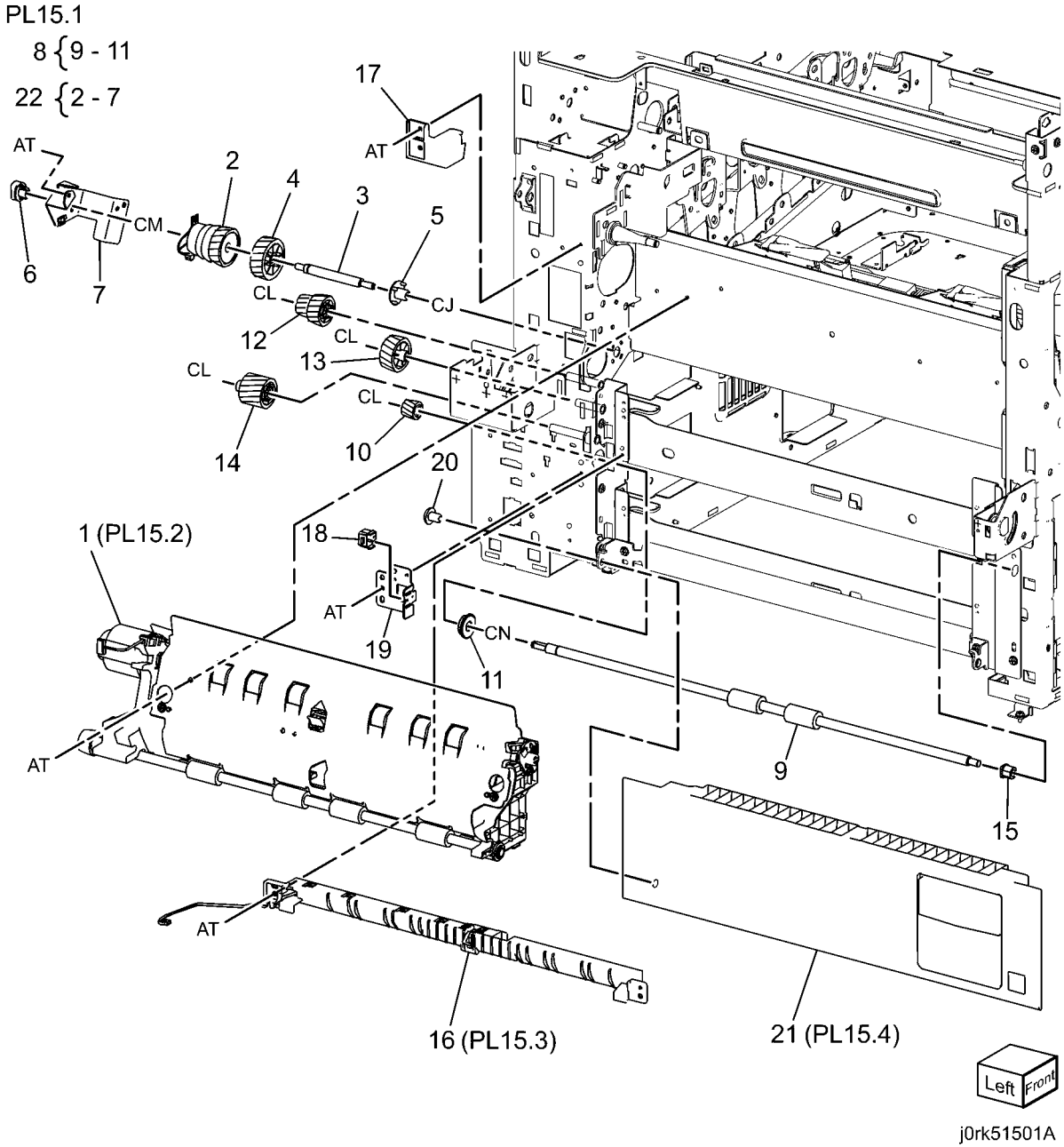

PL 15.2 Registration Transport Assembly

Item	Part	Description
1	–	Inlet Chute Assembly (P/O PL 15.1 Item 1)
2	059K66420	Registration Roller Assembly
3	121K41201	Registration Clutch Assembly
4	059K66430	Take Away Roller Assembly
5	413W11860	Sleeve Bearing
6	413W77559	Bearing
7	–	Adjust Skew Block (P/O PL 15.1 Item 1)
8	807E31610	Gear (23T)
9	–	Registration Harness Assembly (P/O PL 15.1 Item 1)
10	–	Amp Connector Bracket (P/O PL 15.2 Item 15)
11	–	Registration Sensor (P/O PL 15.2 Item 15)
12	–	Actuator (P/O PL 15.2 Item 15)
13	–	Torsion Spring (P/O PL 15.2 Item 15)
14	013E36260	Bearing
15	130K76880	Registrtion Sensor Assembly

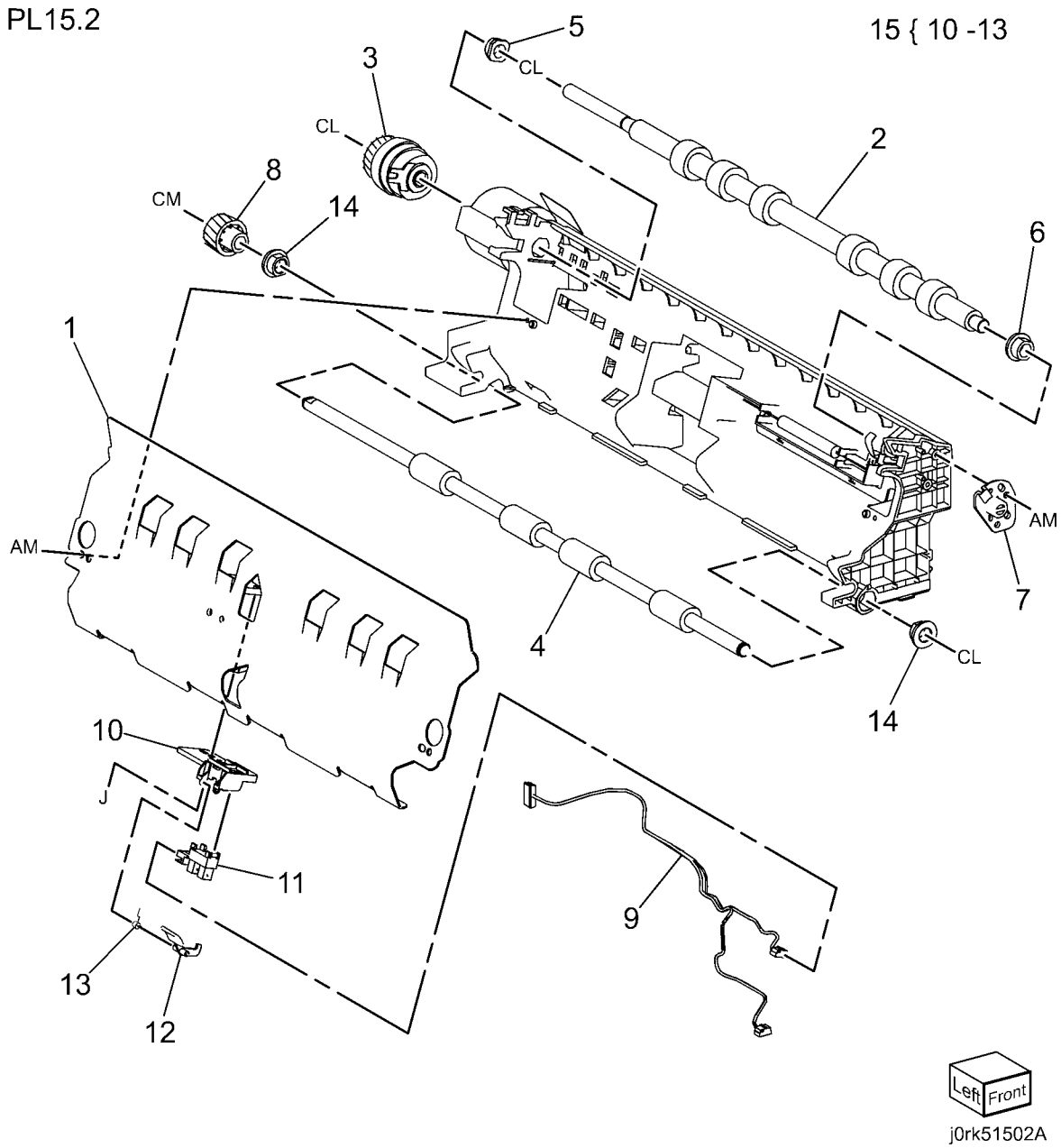

PL 15.3 Take Away Chute

Item	Part	Description
1	–	Take Away Chute (P/O PL 15.1 Item 16)
2	930W00121	Feed Out Sensor
3	–	Sensor Actuator (P/O PL 15.1 Item 16)
4	–	Spring (P/O PL 15.1 Item 16)
5	–	Feed Out Sensor Harness Assembly (P/O PL 15.1 Item 16)

PL15.3

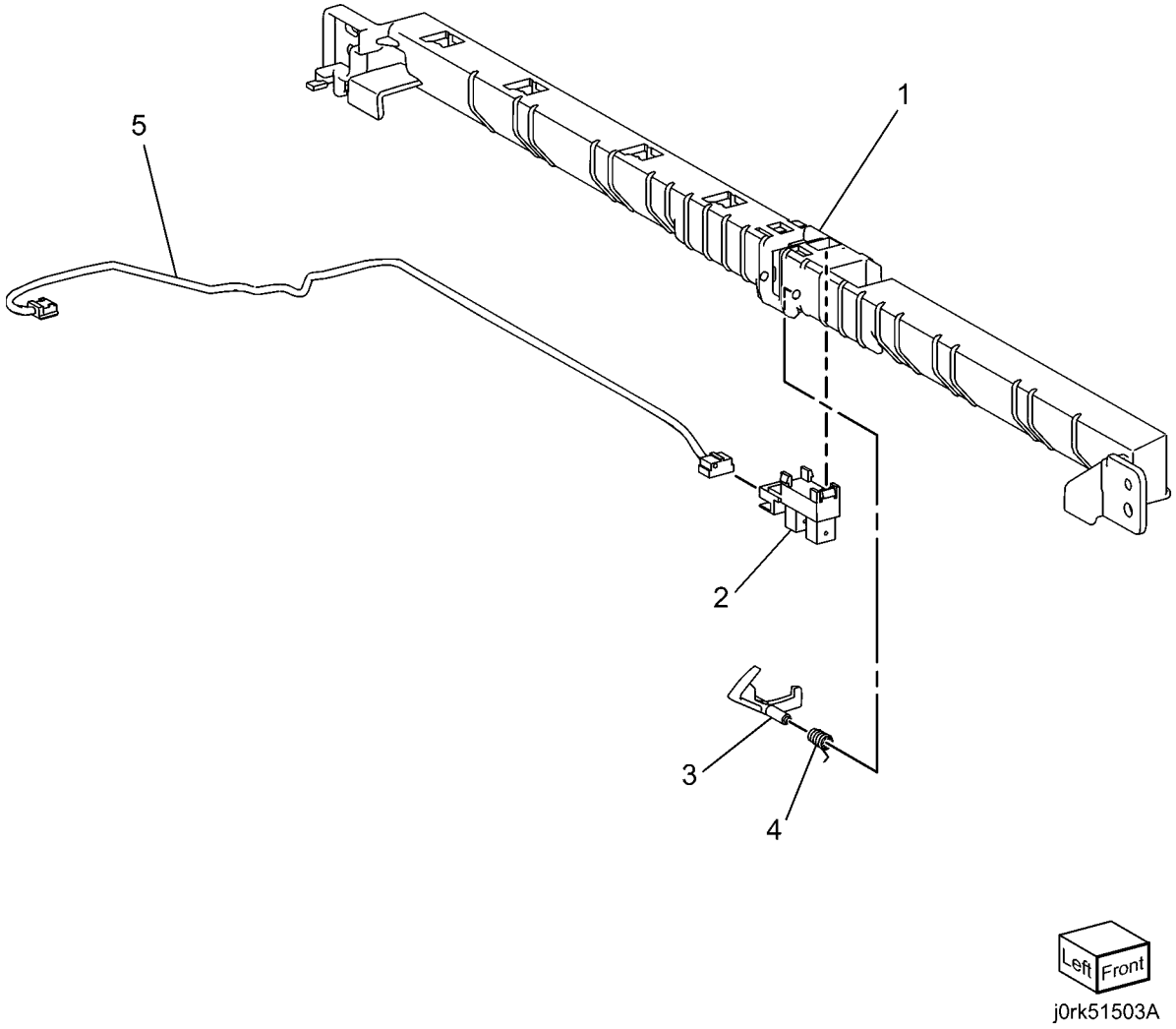

PL 15.4 Lower Cover Assembly

Item	Part	Description
1	–	Left Low Bracket (P/O PL 15.1 Item 21)
2	–	Left Low Handle (P/O PL 15.1 Item 21)
3	–	Compression Spring (P/O PL 15.1 Item 21)
4	–	Out Bearing (P/O PL 15.1 Item 21)
5	–	In Bearing (P/O PL 15.1 Item 21)
6	–	Pinch Roller (P/O PL 15.1 Item 21)
7	–	Left Low Spring (P/O PL 15.1 Item 21)
8	–	Spring (P/O PL 15.1 Item 21)

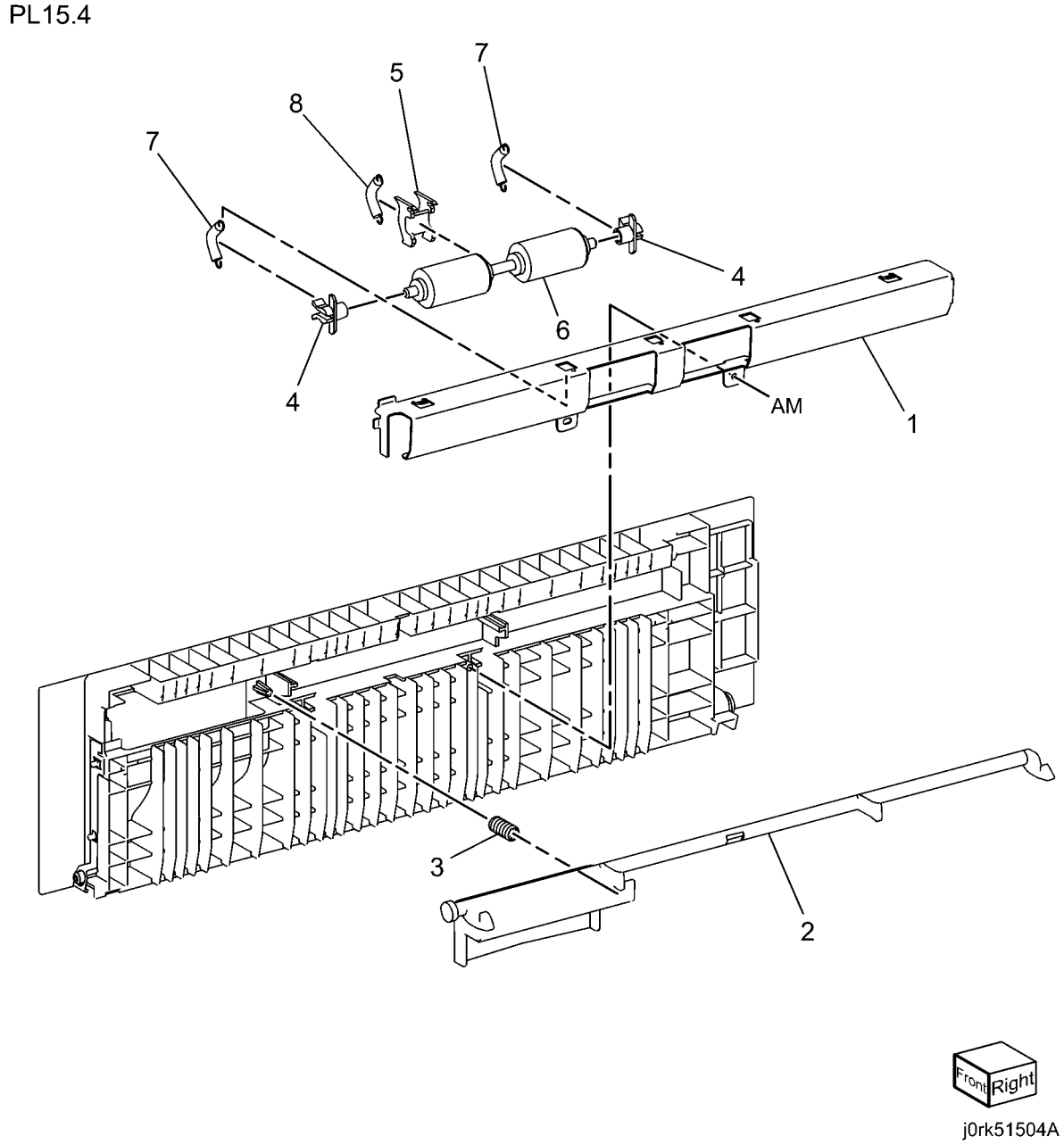

PL 17.1 Exit 1/OCT, Exit 2

Item	Part	Description
1	801K25651	Exit/OCT 1 Assembly (REP 11.1)
2	–	Exiit Base (P/O PL 17.1 Item 1)
3	–	Exit Gear (P/O PL 17.1 Item 1)
4	–	OCT Motor Assembly (P/O PL 17.1 Item 1)
5	–	Offset Gear (P/O PL 17.1 Item 1)
6	–	Bearing (P/O PL 17.1 Item 1)
7	055E58970	Center Exit Guard
8	848K14620	Motor Cover Assembly
9	930W00113	Exit 1 OCT, Home Position Sensor
–	930W00123	Exit 1 OCT Home Position Sensor
10	807E20620	Gear (19T)
11	013E33410	Bearing
12	–	Chute Assembly (P/O PL 17.1 Item 1)
13	036K92030	Weight Assembly
14	050E25690	Small Top Tray
15	059K78430	Exit 2 Transport Assembly (REP 11.2)
16	050E27801	Exit 2 Tray

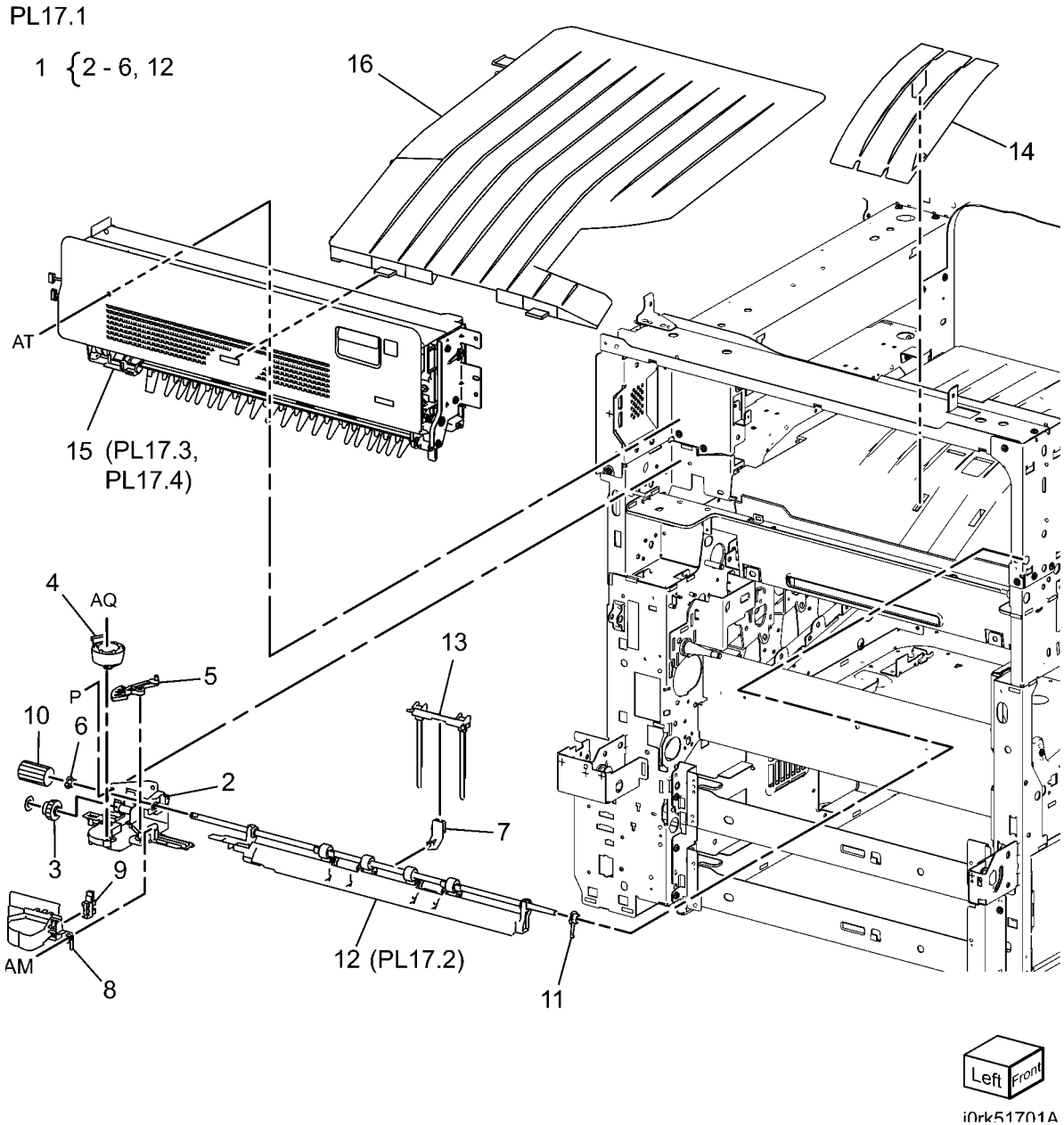

PL 17.2 Exit 1/OCT

Item	Part	Description
1	–	OCT Chute (P/O PL 17.1 Item 12)
2	–	OCT 1 Roller Assembly (P/O PL 17.1 Item 12)
3	–	Pinch Spring (P/O PL 17.1 Item 12)
4	–	Sleeve Bearing (P/O PL 17.1 Item 12)
6	055E57522	Exit Guide
–	059K65781	Pinch Roll Assembly

PL17.2

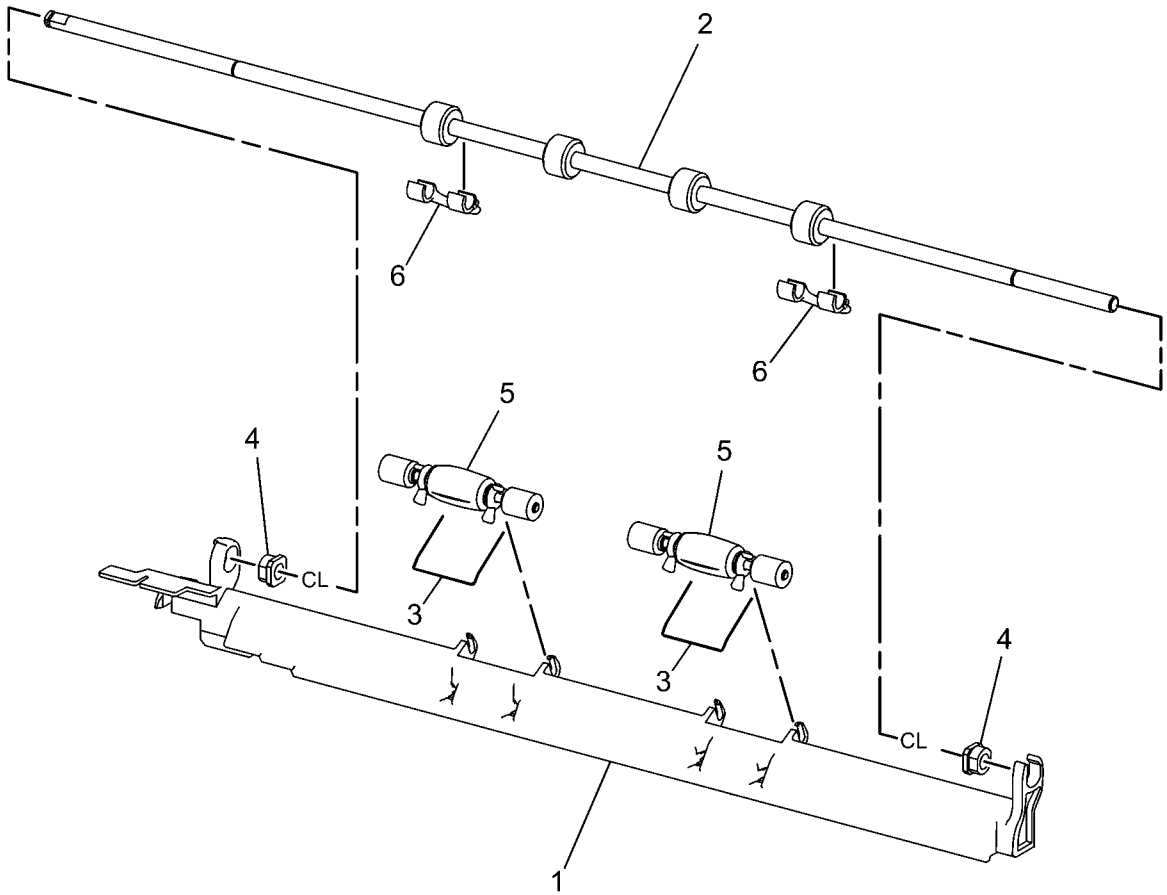

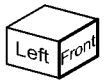

j0rk51702A

PL 17.3 Exit 2 (1 of 2)

Item	Part	Description
1	003E75360	Exit 2 Stopper
2	003E76760	Exit 2 Front Stopper
3	–	Bearing (P/O PL 17.1 Item 15)
4	–	Exit 2 Chute (P/O PL 17.1 Item 15)
5	–	Left Hand High Chute (P/O PL 17.1 Item 15)
6	059K53741	Inverter Roller Assembly
7	127K61091	Exit 2 Motor Assembly
8	–	Bearing (P/O PL 17.1 Item 15)
9	–	Gear Shaft (P/O PL 17.1 Item 15)
10	–	Helical Gear (52T) (P/O PL 17.1 Item 15)
11	–	Inverter Helical Gear (22T) (P/O PL 17.1 Item 15)
12	–	Helical Gear (28T) (P/O PL 17.1 Item 15)
13	–	Helical Gear (16/53T) (P/O PL 17.1 Item 15)
14	–	Earth Plate (P/O PL 17.1 Item 15)
15	–	Gear Cover (P/O PL 17.1 Item 15)
16	–	Shaft Cover (P/O PL 17.1 Item 15)
17	–	Rear Cover (P/O PL 17.1 Item 15)
18	–	Rear Bracket (P/O PL 17.1 Item 15)
19	–	Exit Motor Harness Assembly (P/O PL 17.1 Item 15)
20	–	Label Kit

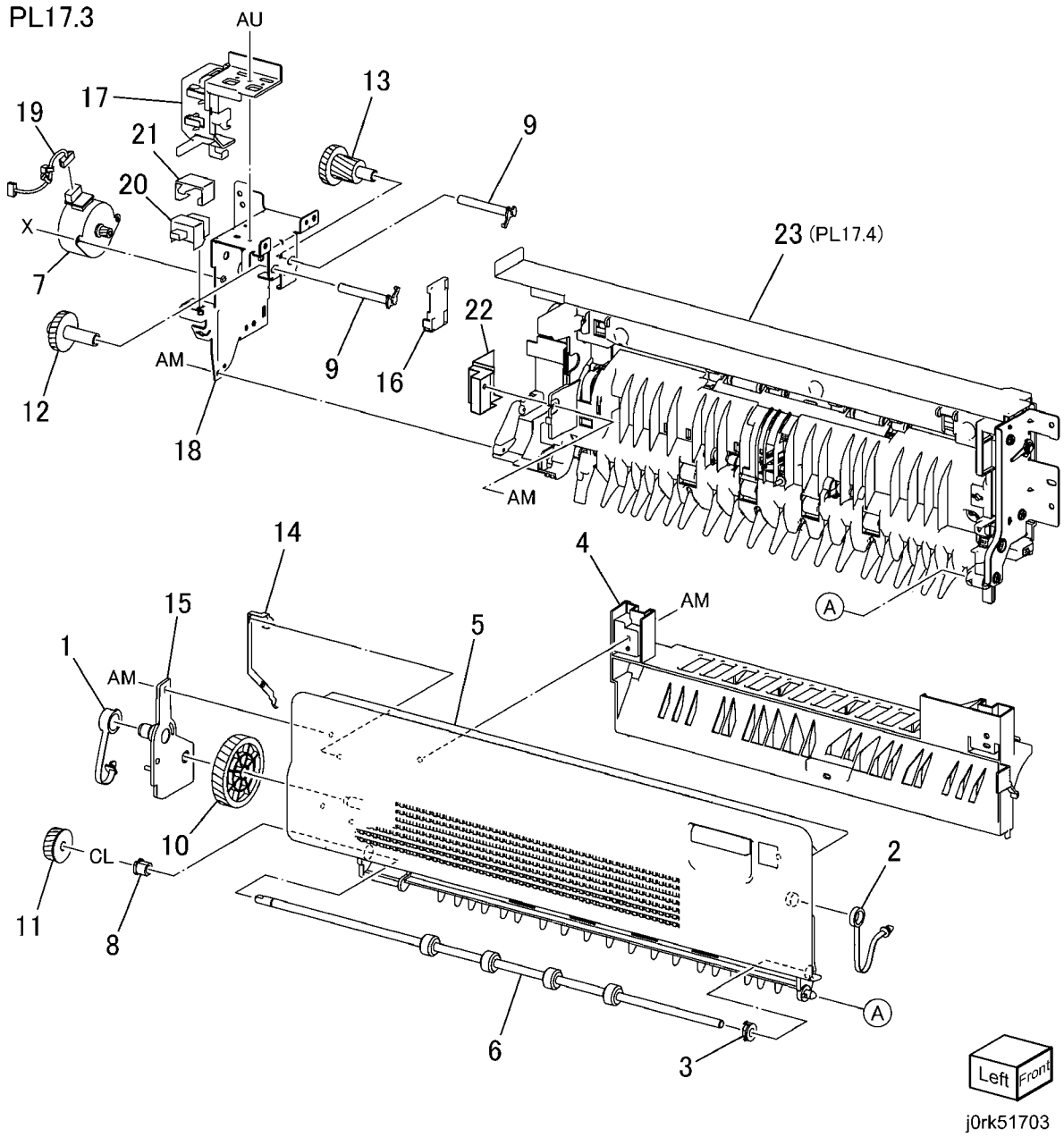

PL 17.4 Exit 2 (2 of 2)

Item	Part	Description
1	–	Exit Gate Link (Deleted)
2	–	Bearing (P/O PL 17.1 Item 15)
3	–	Bearing (P/O PL 17.1 Item 15)
4	038K20232	Exit 2 Guide Assembly
5	–	Exit Chute (P/O PL 17.1 Item 15)
6	–	Lower Chute (P/O PL 17.1 Item 15)
7	055E57522	Exit Guard
8	059K65781	Exit 1 Pinch Roll Assembly
9	–	Inverter Pinch Roll (P/O PL 17.1 Item 15)
10	–	Exit 2 Roller Assembly (Not Spared)
11	059E98780	Actuator Roller
12	110E11580	In Line Switch
13	120E29430	Exit Actuator
14	–	Solenoid Assembly (Deleted)
15	–	Helical Gear (22T) (Not Spared)
16	809E37332	Actuator Spring
17	–	Exit Pinch Spring (P/O PL 17.1 Item 15)
18	–	Inverter Pinch Spring (Not Spared)
19	–	Exit 2 Earth Plate (P/O PL 17.4 Item 4)
20	–	Inverter Solenoid Cover (Deleted)
21	–	Front Bracket (P/O PL 17.1 Item 15)
22	–	Static Eliminator (P/O PL 17.4 Item 4)
23	930W00123	Exit 2 Sensor
–	930W00113	Exit 2 Sensor (XC)
24	–	Exit 2 Harness Assembly
25	059K67971	Pinch Roll Assembly
26	–	Exit 2 Gate (P/O PL 17.4 Item 4)

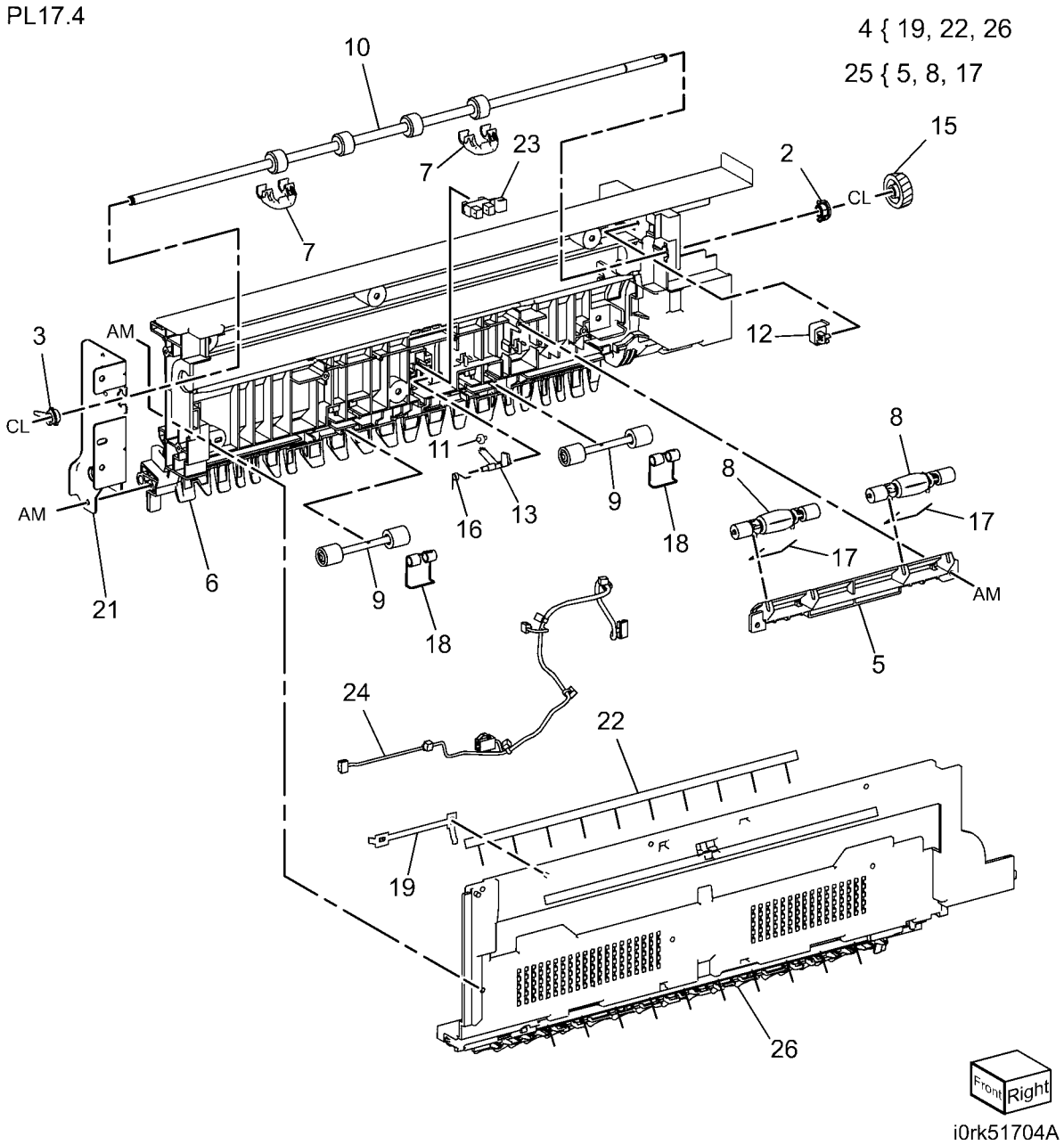

PL 18.1 PWB's

Item	Part	Description
1	101K61941	MCU PWB Assembly (REP 3.4)
2	–	Bracket (P/O PL 18.1 Item 1)
3	–	PWB Board (P/O PL 18.1 Item 1)
4	105K24000	Main LVPS PWB (REP 1.1)
5	105E20360	HVPS (REP 1.2)
6	–	Plate Cover
7	–	AC Chassis (Not Spared)
8	–	AC Chassis Cover (Not Spared)
9	152S04600	Power Cord (110V)
–	675K41280	Power Cord (220V)

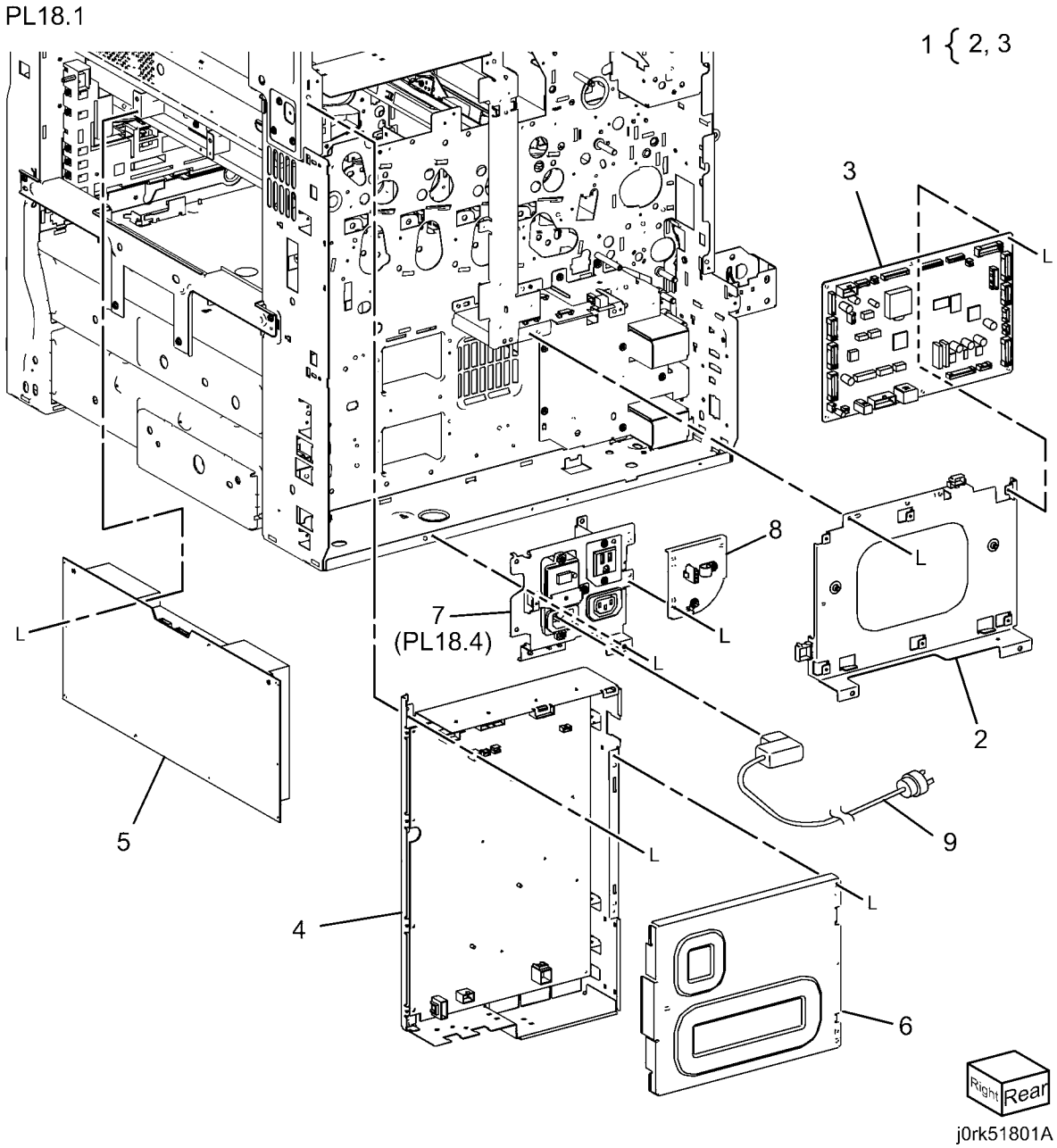

PL 18.2 Switches

Item	Part	Description
1	130K76360	ADC/MOB Assembly (REP 9.10)
2	110K16180	Main Power Switch Assembly
3	–	Switch Bracket (P/O PL 18.2 Item 2)
4	–	Power Switch Harness (P/O PL 18.2 Item 2)
5	–	Power Switch (P/O PL 18.2 Item 2)
6	110K16062	Power Switch
7	110K16190	Front Interlock Switch Assembly
8	110K16200	Interlock Switch
9	–	ADC Harness Guide (Not Spared)

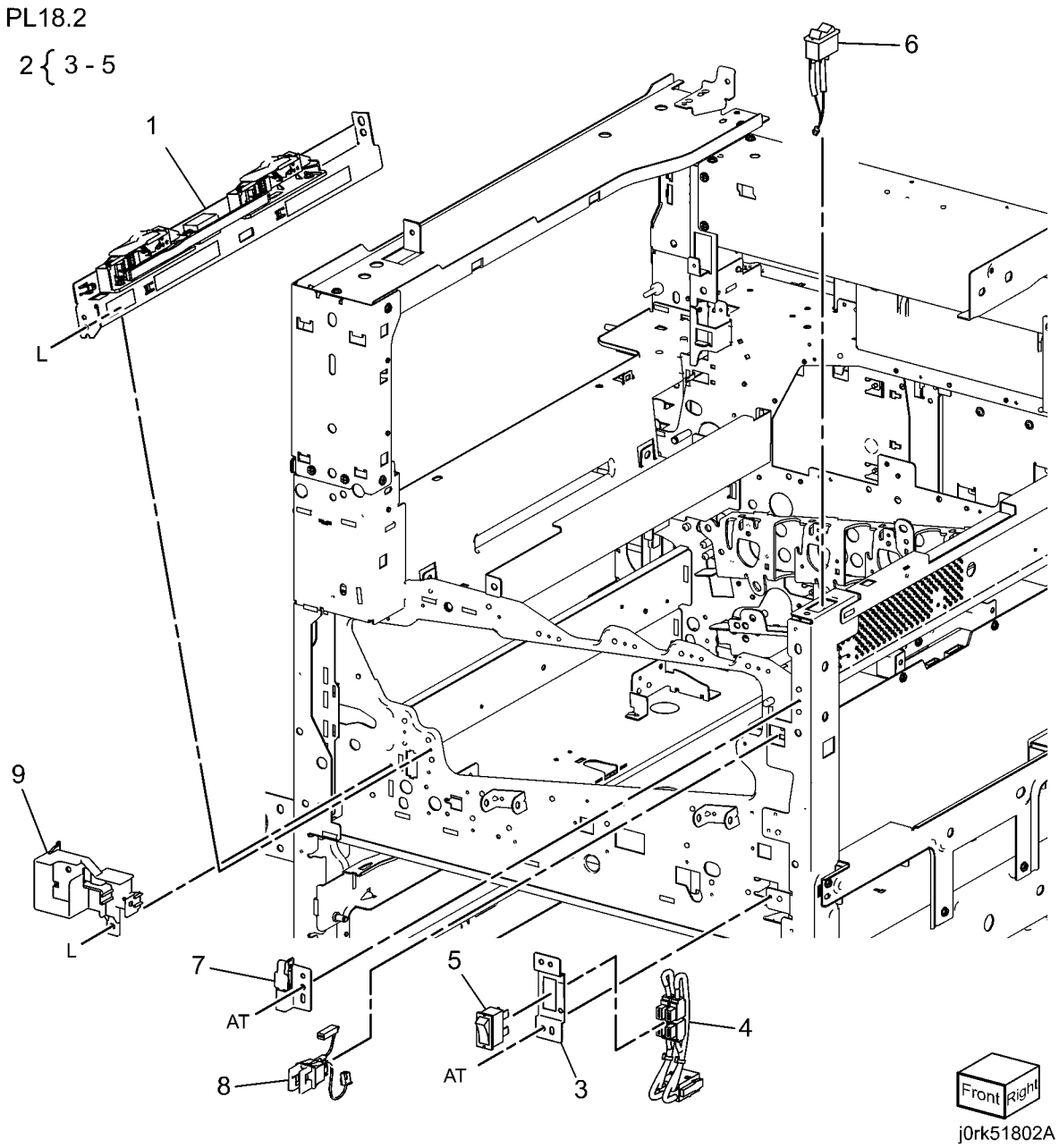

PL 18.3 Harnesses

Item	Part	Description
1	–	Left Hand Main Harness (Not Spared)
2	–	Right Hand Harness (Not Spared)
3	–	Front Harness (Not Spared)
4	962K81991	CONT-MCU Harness (Not Spared)
5	–	MCU-ROS Harness
6	–	CONT-ROS Harness (Not Spared)
7	–	Lower MCU Harness (Not Spared)
8	–	Lower Contact Harness (Not Spared)
9	–	Top Level Harness (Not Spared)
10	117K39122	IIT-SBC Video Harness
11	–	In Feed Harness (Not Spared)
12	962K81980	IIT-SBC I/O Harness
13	–	AC Fuser Unit Harness (Not Spared)

PL18.3

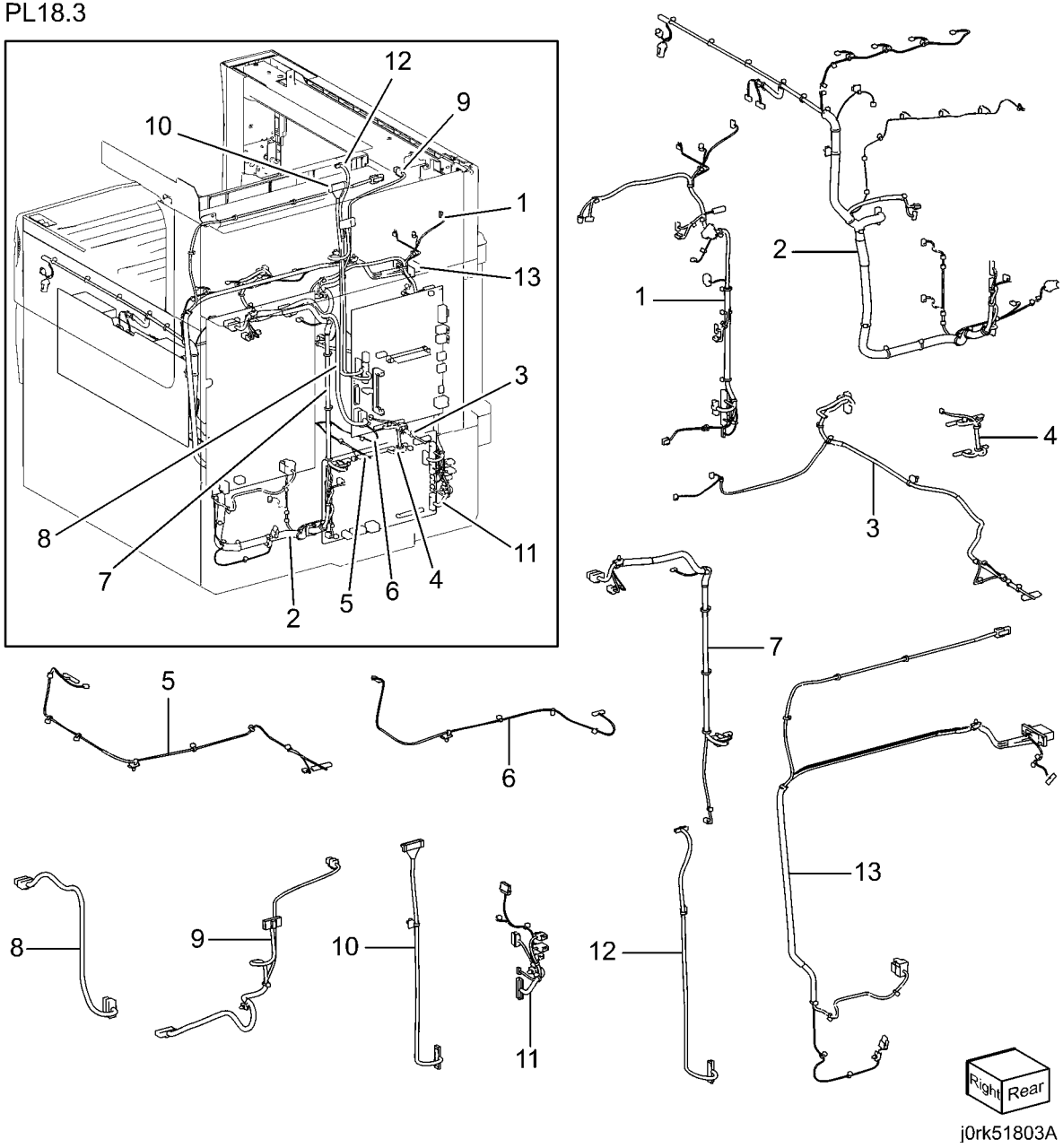

PL 18.4 AC Chassis Assembly

Item	Part	Description
1	–	Chassis (P/O PL 18.1 Item 7)
2	–	Wire Assembly (P/O PL 18.1 Item 7)
3	–	Wire Assembly (P/O PL 18.1 Item 7)
4	–	Wire Assembly (P/O PL 18.1 Item 7)
5	–	Screw
6	–	GFI Connector Bracket (P/O PL 18.1 Item 7)
7	–	Bracket (P/O PL 18.1 Item 7)
8	–	Inlet GFI Breaker (P/O PL 18.1 Item 7)
9	–	Outlet Connector (P/O PL 18.1 Item 7)
10	–	AC Power Harness Assembly (Not Spared)
11	–	Outlet (FX) (Not Spared)

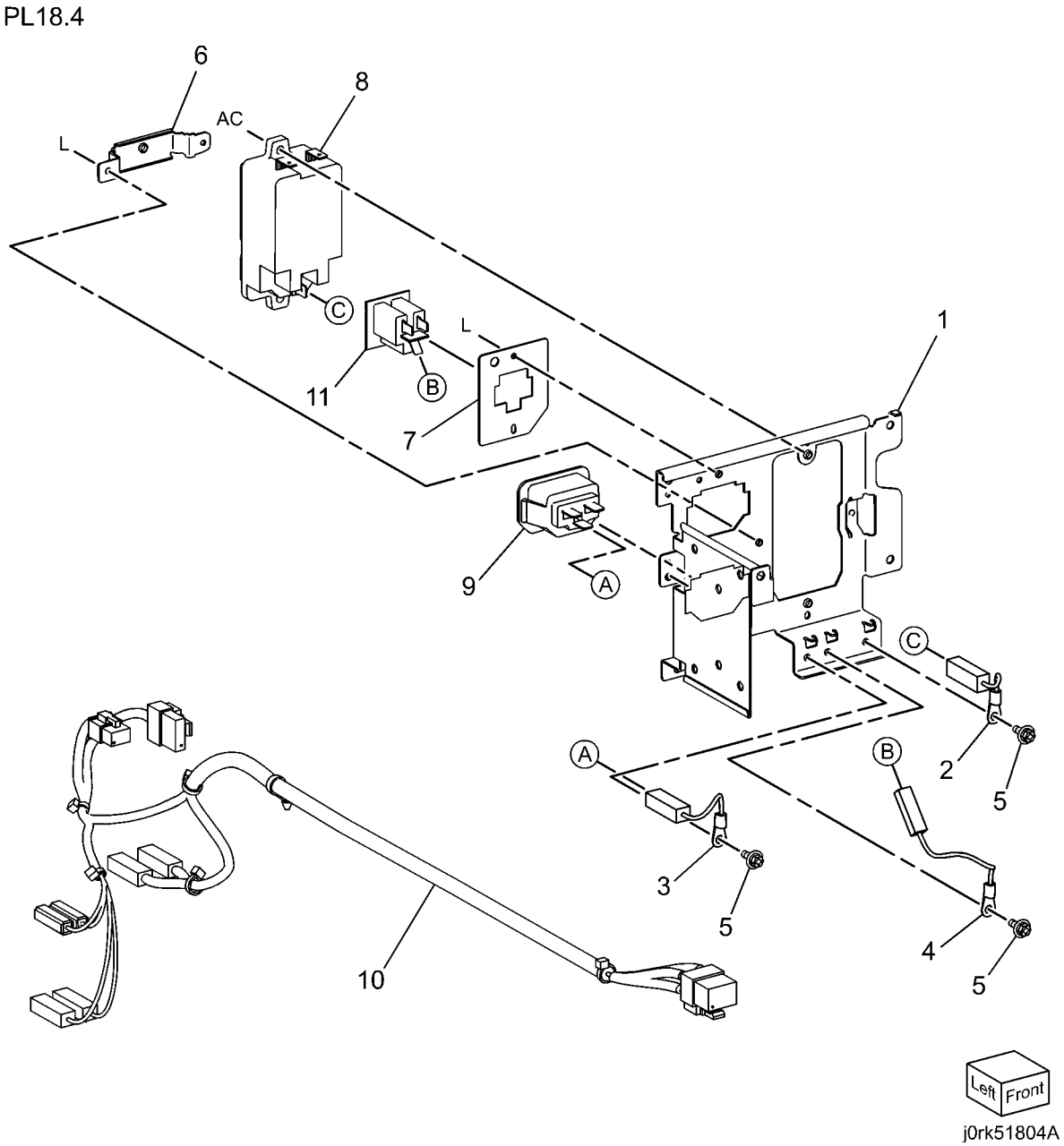

PL 18.5 Fax Assembly

Item	Part	Description
1	–	Fax Box Assembly
2	–	Fax Box (P/O PL 18.5 Item 1)
3	–	Bracket (P/O PL 18.5 Item 1)
4	–	Cover (P/O PL 18.5 Item 1)
7	–	Label (P/O PL 18.5 Item 1)
11	–	Cover (Not Spared)

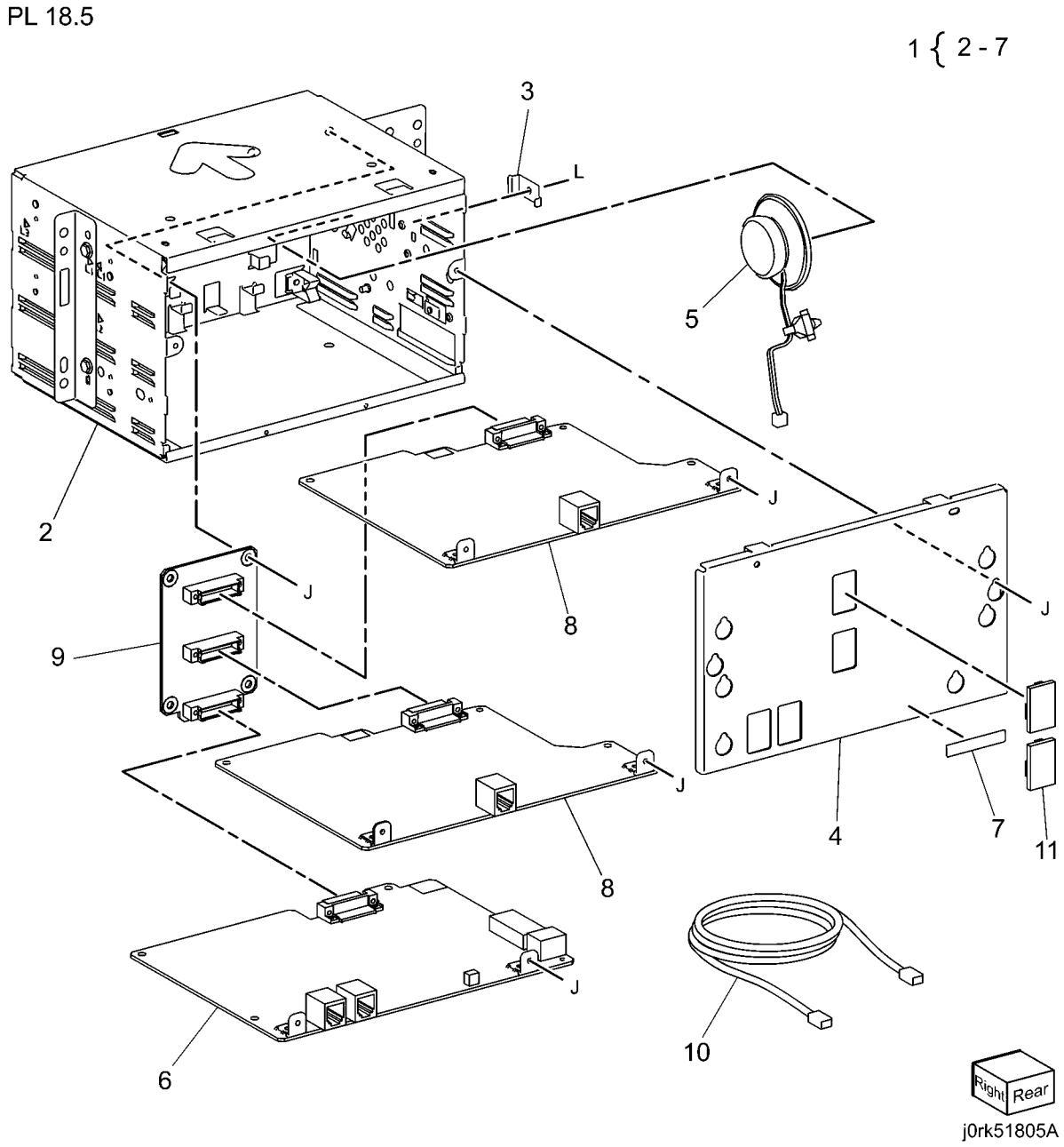

PL 19.1 Front Cover

Item	Part	Description
1	–	Switch Label (Not Spared)
2	848K45090	Front Cover
3	121E21331	Catch Magnet
4	848E14030	Outer Strap
5	848K36380	Inner Cover Assembly
6	–	Inner Cover (P/O PL 19.1 Item 5)
7	–	Toner Label (Y) (P/O PL 19.1 Item 5)
8	–	Toner Label (M) (P/O PL 19.1 Item 5)
9	–	Toner Label (C) (P/O PL 19.1 Item 5)
10	–	Toner Label (K) (P/O PL 19.1 Item 5)
11	848E14020	Inner Strap

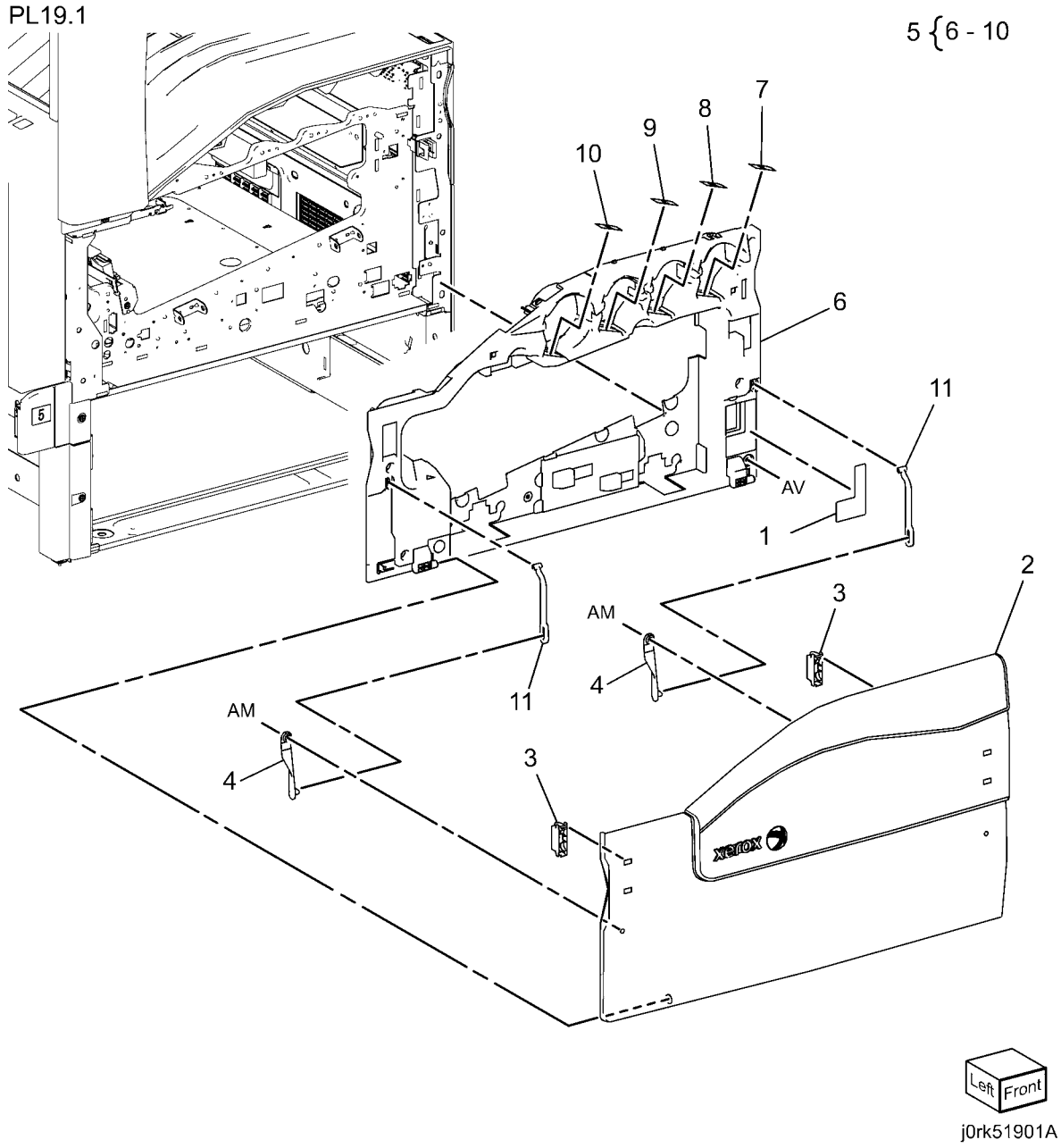

PL 19.2 Top, Left Covers

Item	Part	Description
1	848K38411	Top Cover Assembly (REP 14.3)
2	848E48260	Upper Front Cover
3	–	Internal Upright Cover (Not Spared)
4	–	Internal Cover (Not Spared)
5	–	Internal Back Cover (Not Spared)
6	–	Left Hand Top Cover (Not Spared)
7	–	Upper Left Hand Cover (Not Spared)
8	–	Left Hand Filter Cover (Not Spared)
9	–	Left Hand Lower Cover (Not Spared)
10	–	Left Hand Lower Cover (Not Spared)
11	–	Left Hand Handle Cover (Not Spared)
12	–	MSI Cover (Not Spared)
13	–	Number Label (Not Spared)
14	–	Screw (Not Spared)

PL19.2

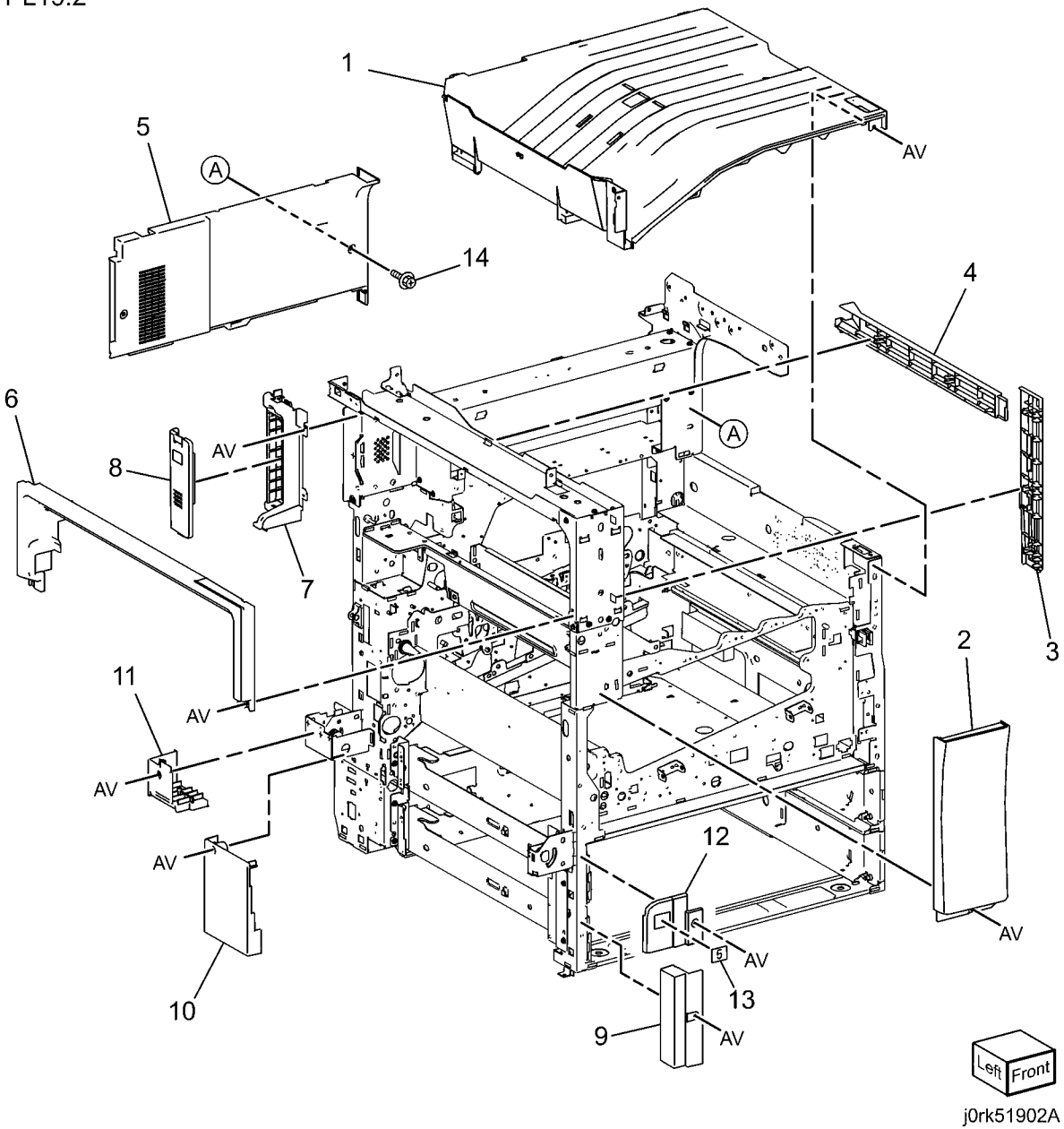

PL 19.3 Right, Rear Covers

Item	Part	Description
1	–	Right Hand Cover Assembly (Not Spared)
2	–	Right Small Cover (Not Spared)
3	–	Upper Rear Cover (Not Spared)
4	848E86790	Fax Cover
6	–	SBC Rear Cover (Not Spared)
7	–	Rear Cover (Not Spared)
8	–	Lower Rear Cover (Not Spared) (REP 14.4)
9	–	MCU Spec Cover (Not Spared)
10	–	EPSV Cover (Not Spared)
11	–	Rear Cover Bracket (Not Spared)
12	–	Data Plate (Not Spared)
13	–	Outlet Label (Not Spared)
14	–	GFI Label (Not Spared)
15	–	Earth Label (Not Spared)
16	–	Label (Not Spared)
17	–	Label (Not Spared)

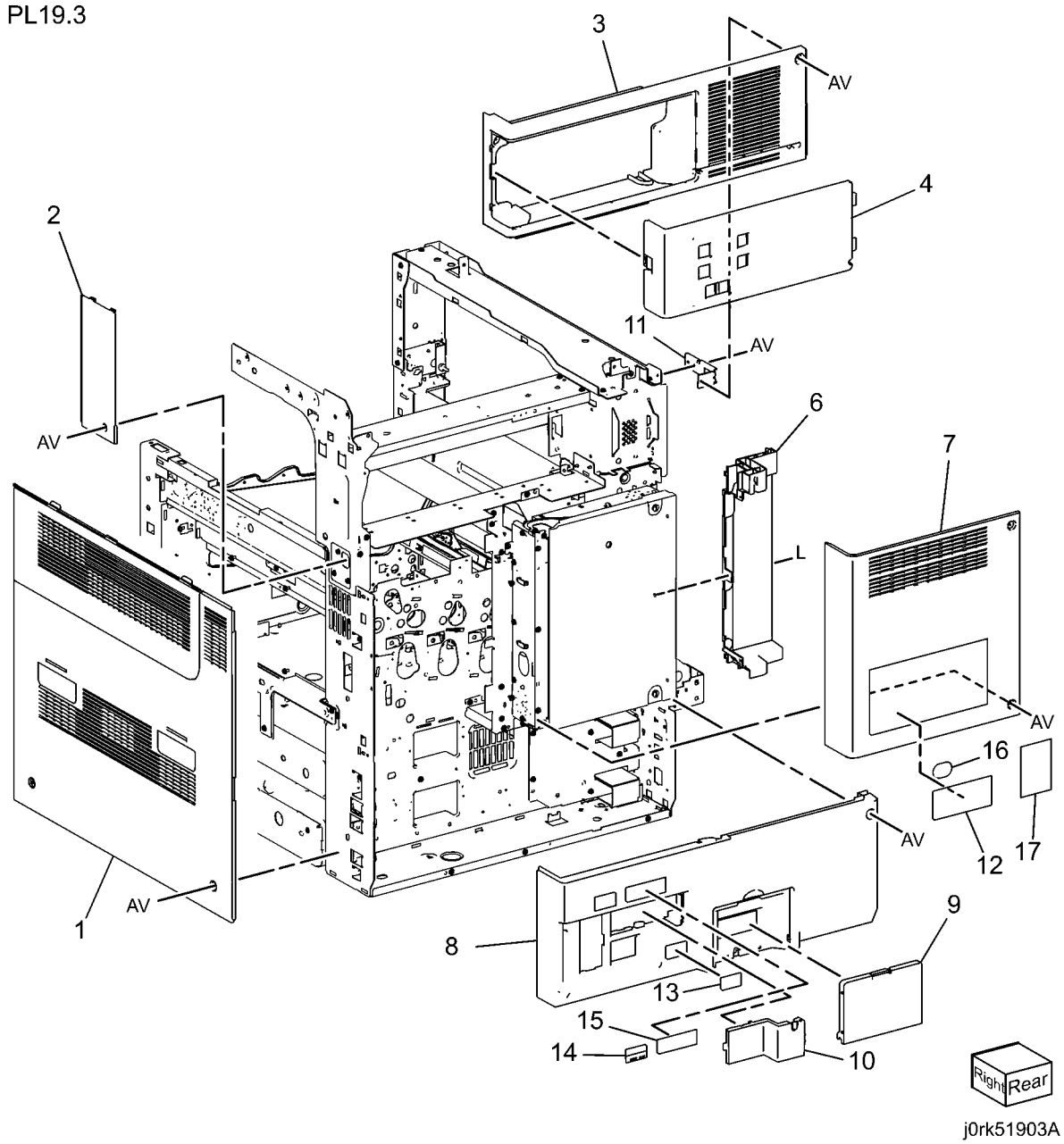

PL 22.1 Finisher Assembly (Part 1 of 2) (Integrated Office Finisher)

Item	Part	Description
2	–	Front Cover (P/O PL 22.1 Item 1)
3	–	Bracket (P/O PL 22.1 Item 1)
4	–	Magnet (P/O PL 22.1 Item 1)
5	–	Label (P/O PL 22.1 Item 1)
10	–	Top Cover (P/O PL 22.1 Item 9)
11	–	Bracket (P/O PL 22.1 Item 9)
12	–	Stopper (P/O PL 22.1 Item 9)
13	–	Magnet (P/O PL 22.1 Item 9)
15	–	Hinge (Not Spared)

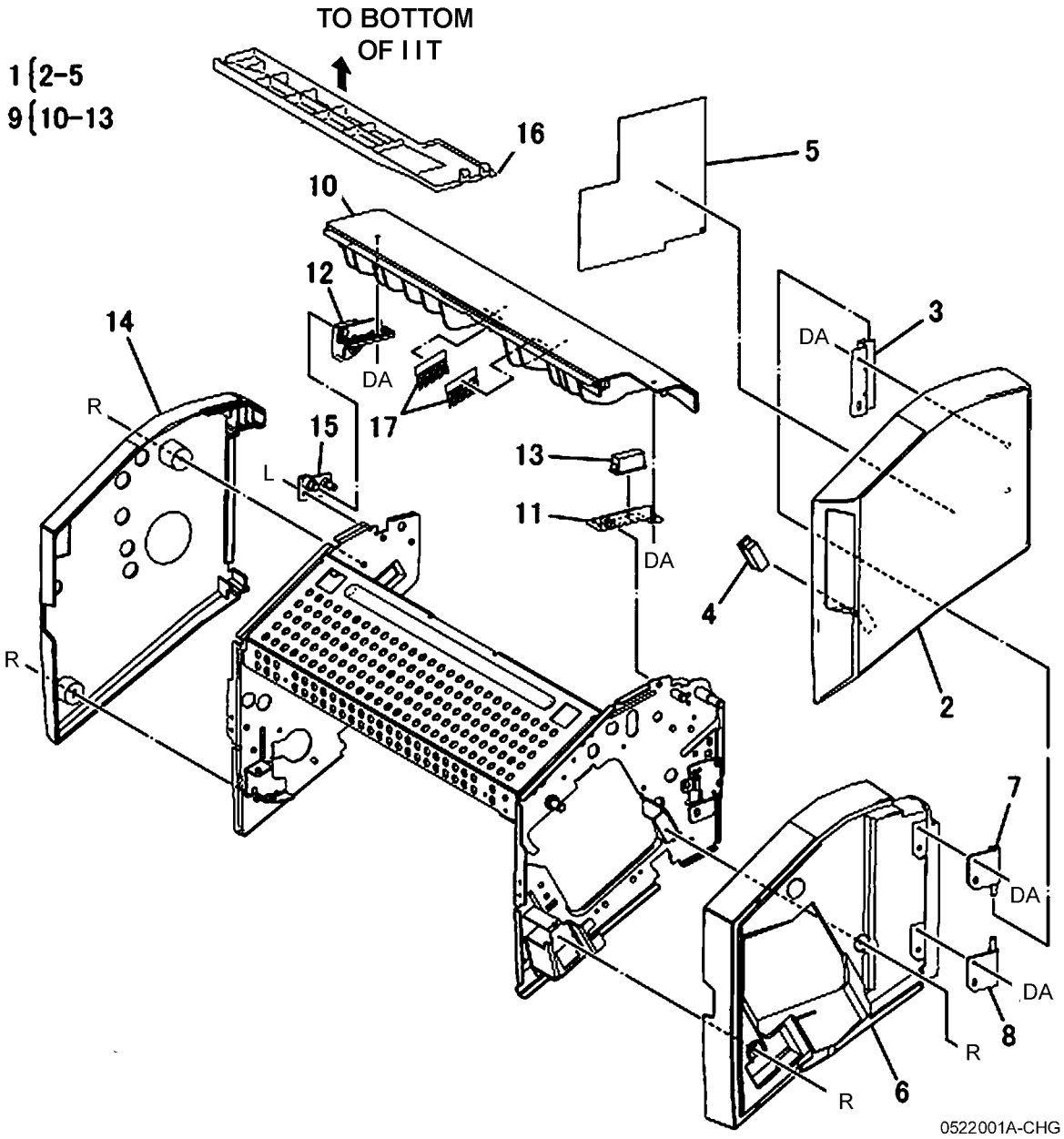

PL 22.2 Finisher Assembly (Part 2 of 2) (Integrated Office Finisher)

Item	Part	Description
1	–	Bottom Cover (Not Spared)
2	–	Spacer (Not Spared)
3	–	Tray Cover (Not Spared)
6	–	Rear Bracket (Not Spared)
9	–	Stacker Base Assembly (Not Spared)
10	–	Extended Tray Assembly

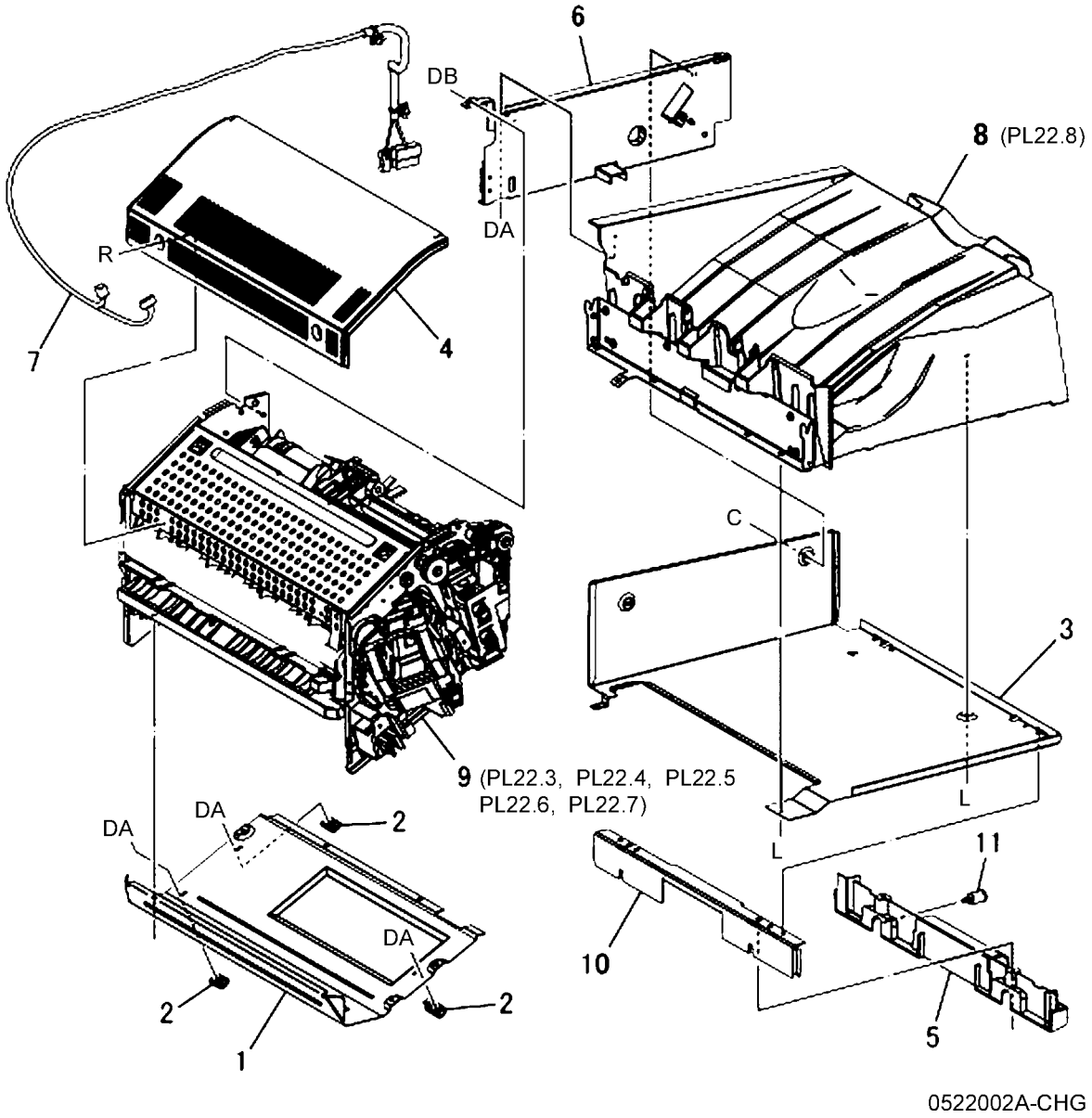

PL 22.3 Stacker Base Assembly (Part 1 of 5) (Integrated Office Finisher)

Item	Part	Description
5	–	Link Shaft (P/O PL 22.3 Item 4)
7	–	Sub Paddle Shaft Assembly (P/O PL 22.3 Item 4)
8	–	Bearing (P/O PL 22.3 Item 4)
16	–	Knob Cover (P/O PL 22.3 Item 15)
17	–	Spring (P/O PL 22.3 Item 15)
19	–	Bracket (Not Spared)
22	–	Support (P/O PL 22.3 Item 18)
23	–	Cushion (P/O PL 22.3 Item 18)
24	–	Link (P/O PL 22.3 Item 18)
25	–	Arm (P/O PL 22.3 Item 18)
26	–	Bracket (P/O PL 22.3 Item 18)
28	–	Spring (P/O PL 22.3 Item 18)

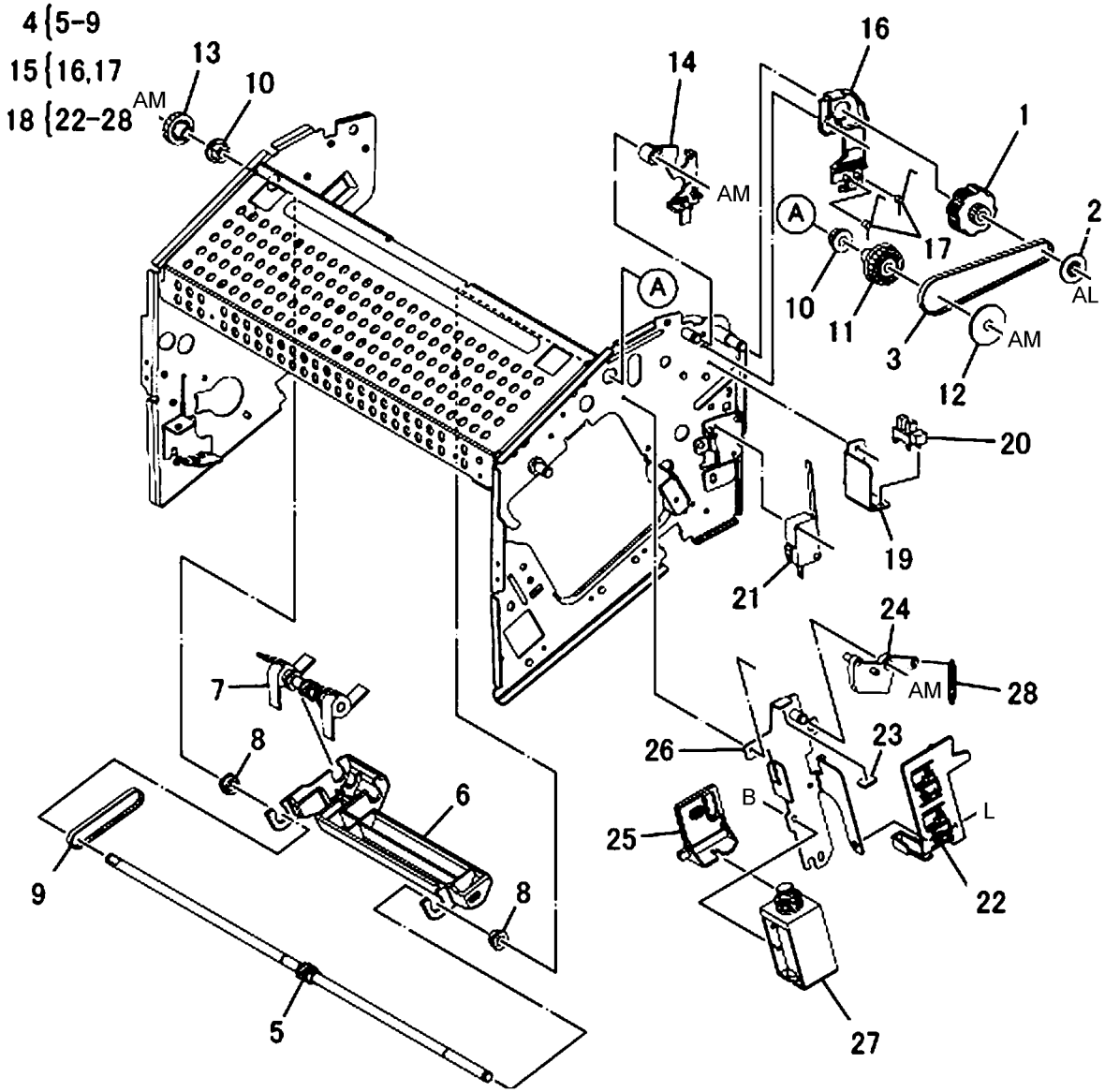

0522003A-CHG

PL 22.4 Stacker Base Assembly (Part 2 of 5) (Integrated Office Finisher)

Item	Part	Description
3	–	Cartridge (P/O PL 22.4 Item 2)
4	–	Stapler (P/O PL 22.4 Item 2)
5	–	Bracket (Not Spared)
6	–	Support (Not Spared)
10	–	Exit Roll (P/O PL 22.4 Item 9)
13	–	Bearing (Not Spared)

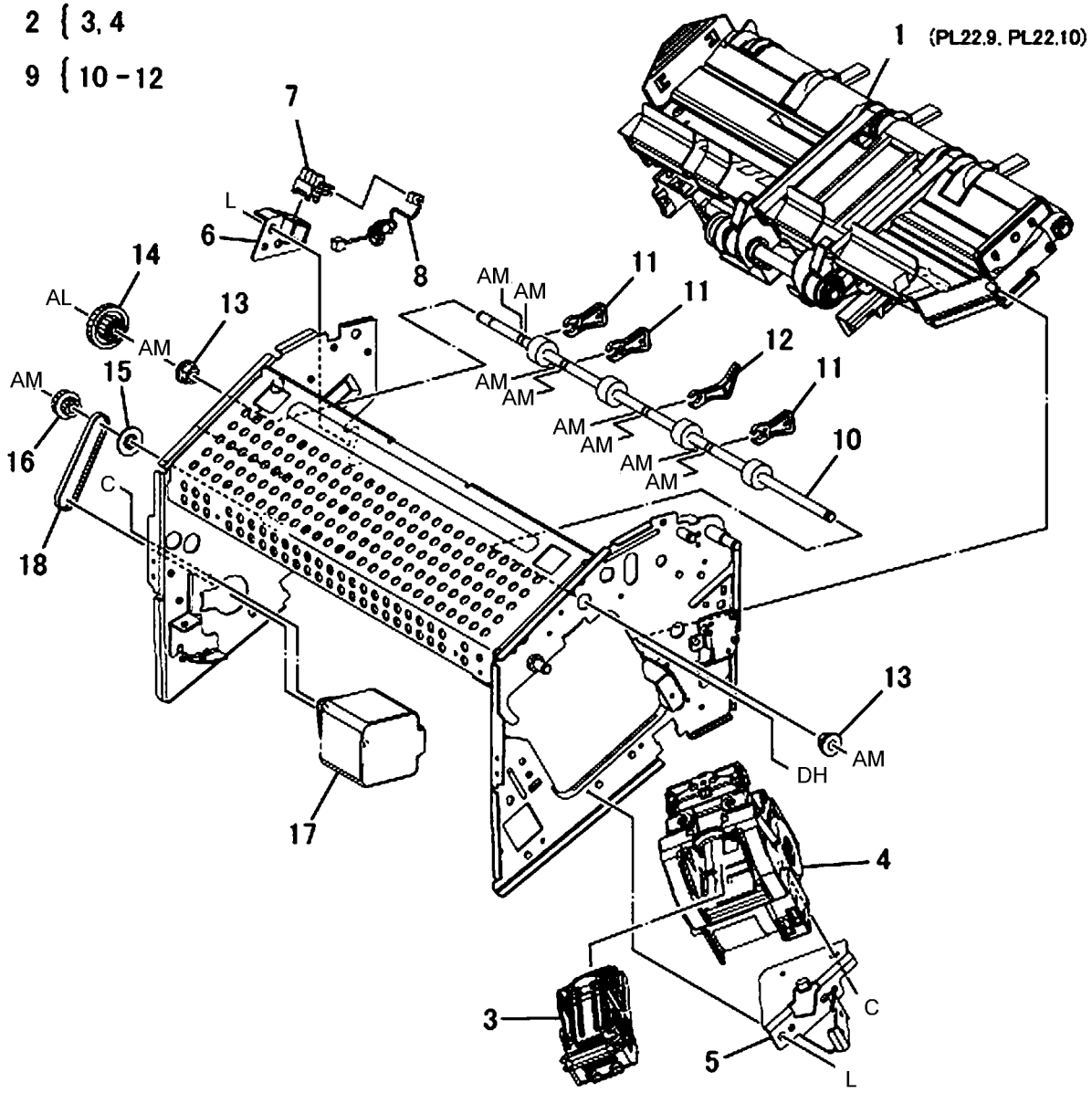

j0fa52204-CHG

PL 22.5 Stacker Base Assembly (Part 3 of 5) (Integrated Office Finisher)

Item	Part	Description
6	–	Shaft (Not Spared)
10	–	Lower Chute (P/O PL 22.5 Item 9)
13	–	Support (Not Spared)
14	–	Bracket (Not Spared)
15	–	Bracket (Not Spared)
18	–	Bracket (Not Spared)

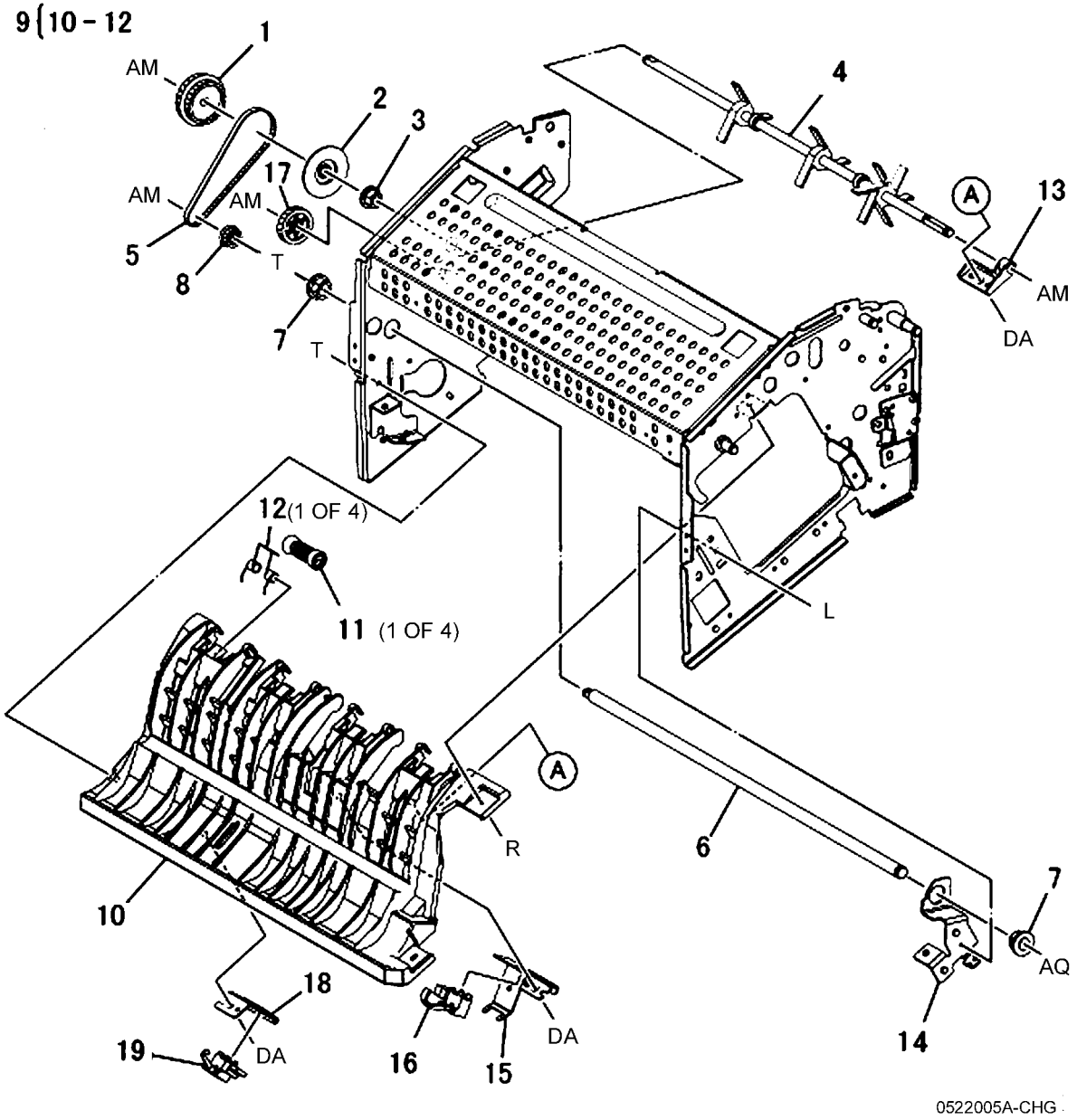

PL 22.6 Stacker Base Assembly (Part 4 of 5) (Integrated Office Finisher)

Item	Part	Description
4	–	Upper Chute (P/O PL 22.6 Item 3)
10	–	Spring (Not Spared)
12	–	Guide Paper (P/O PL 22.6 Item 3)

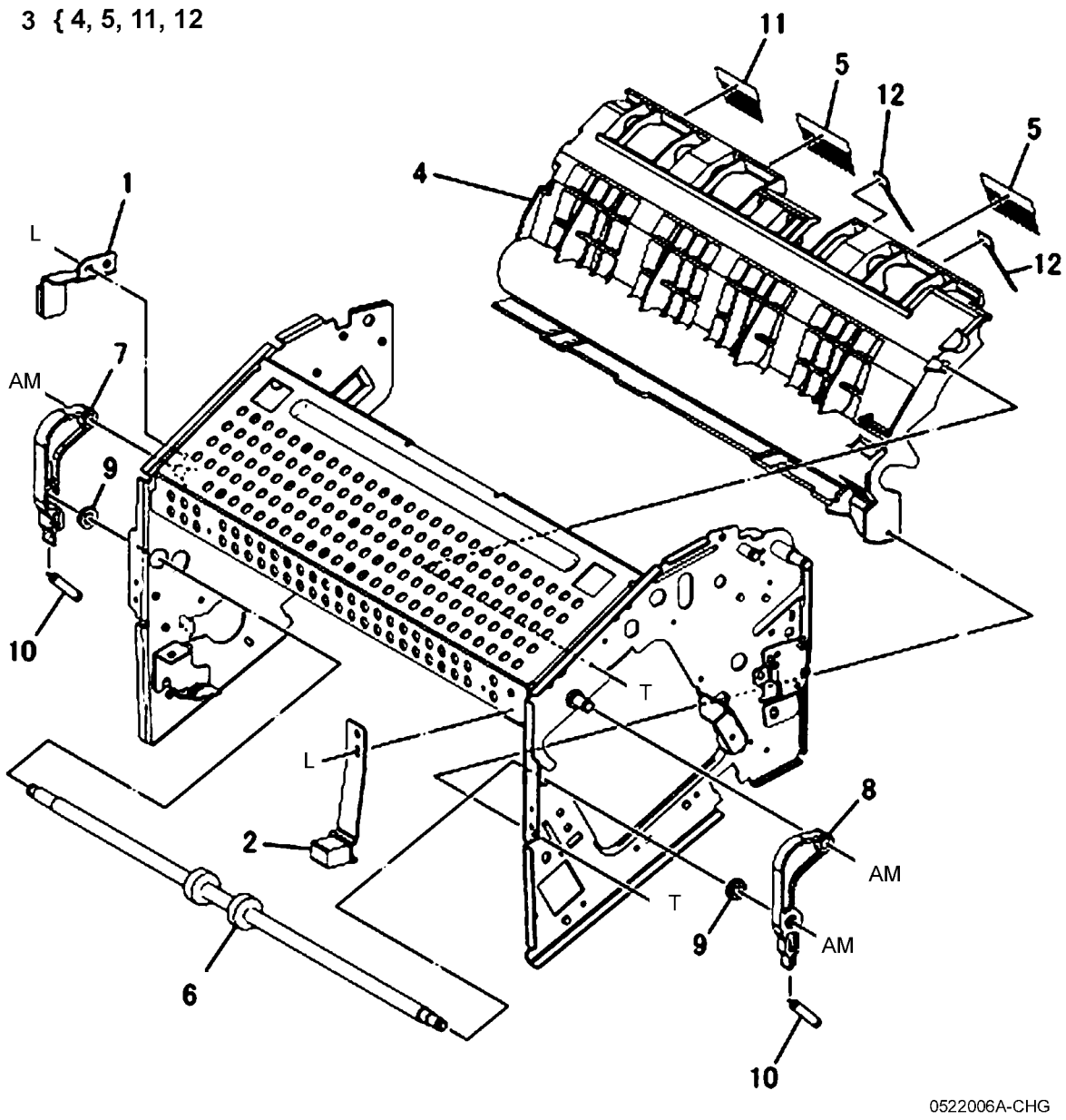

PL 22.7 Stacker Base Assembly (Part 5 of 5) (Integrated Office Finisher)

Item	Part	Description
3	–	Harness Guide (Not Spared)
4	–	PWB Bracket (Not Spared)
5	–	Wire Harness (Drive) (Not Spared)
6	–	Wire Harness (Stapler) (Not Spared)
7	–	Wire Harness (Interlock) (Not Spared)
8	–	Wire Harness (Front Sensor) (Not Spared)
9	–	Wire Harness (Compile) (Not Spared)
10	–	Wire Harness (Stacker) (Not Spared)
11	–	Bracket (Not Spared)

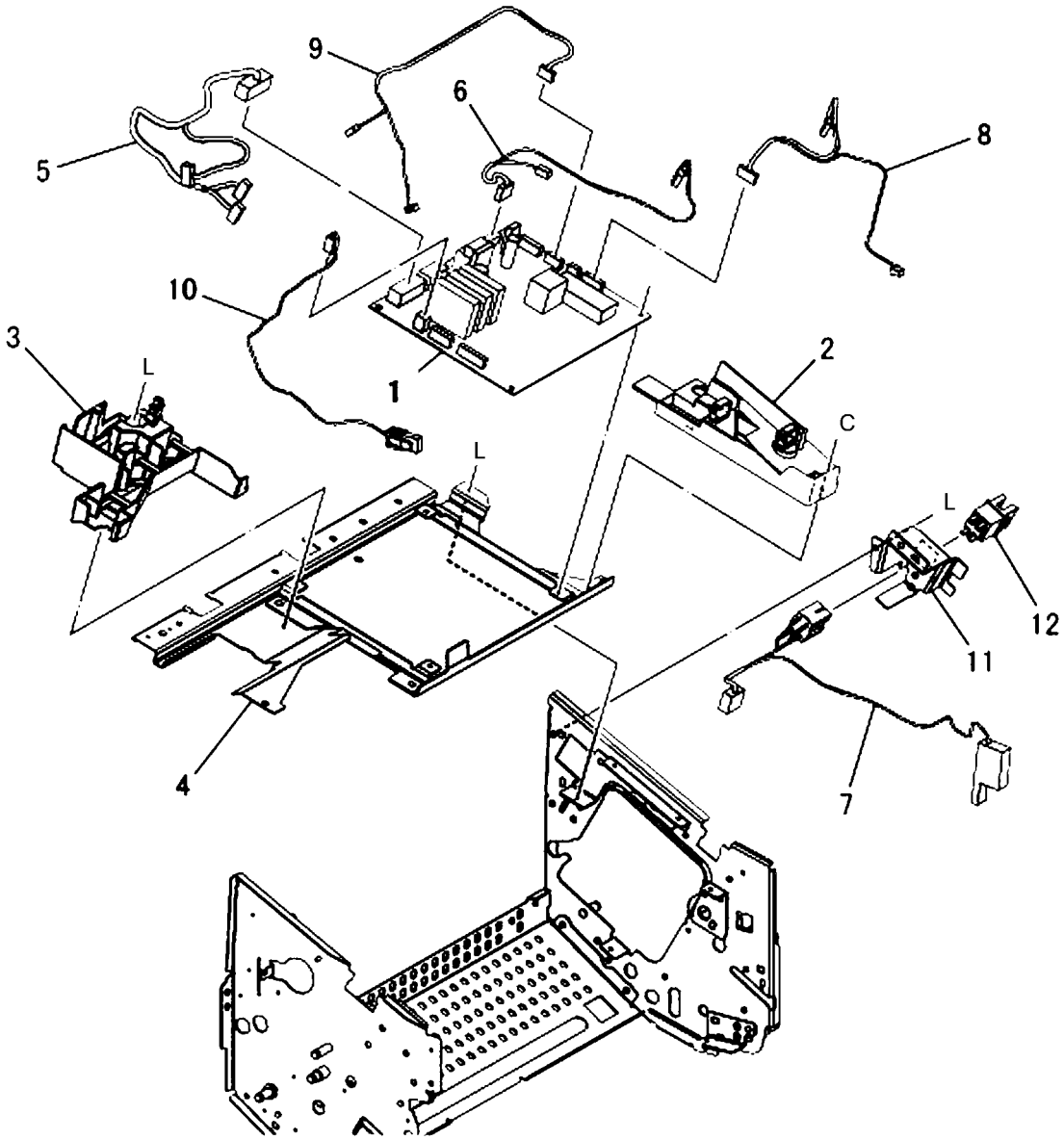

0522007A-CHG

PL 22.8 Stacker Tray Assembly (Integrated Office Finisher)

Item	Part	Description
1	–	Bearing (Not Spared)
3	–	Bracket (Not Spared)
4	–	Plate (Not Spared)
5	–	Bracket (Not Spared)
6	–	Base Tray (Not Spared)
7	–	Base Bracket (Not Spared)
10	–	Pulley (60T) (Not Spared)
11	–	Worm Gear (Not Spared)
12	–	Gear (16T/32T) (Not Spared)
13	–	Stud (Not Spared)
14	–	Bracket (Not Spared)
15	–	Bearing (Not Spared)
17	–	Bracket (Not Spared)
19	–	Actuator (Not Spared)
20	–	Wire Harness (Not Spared)

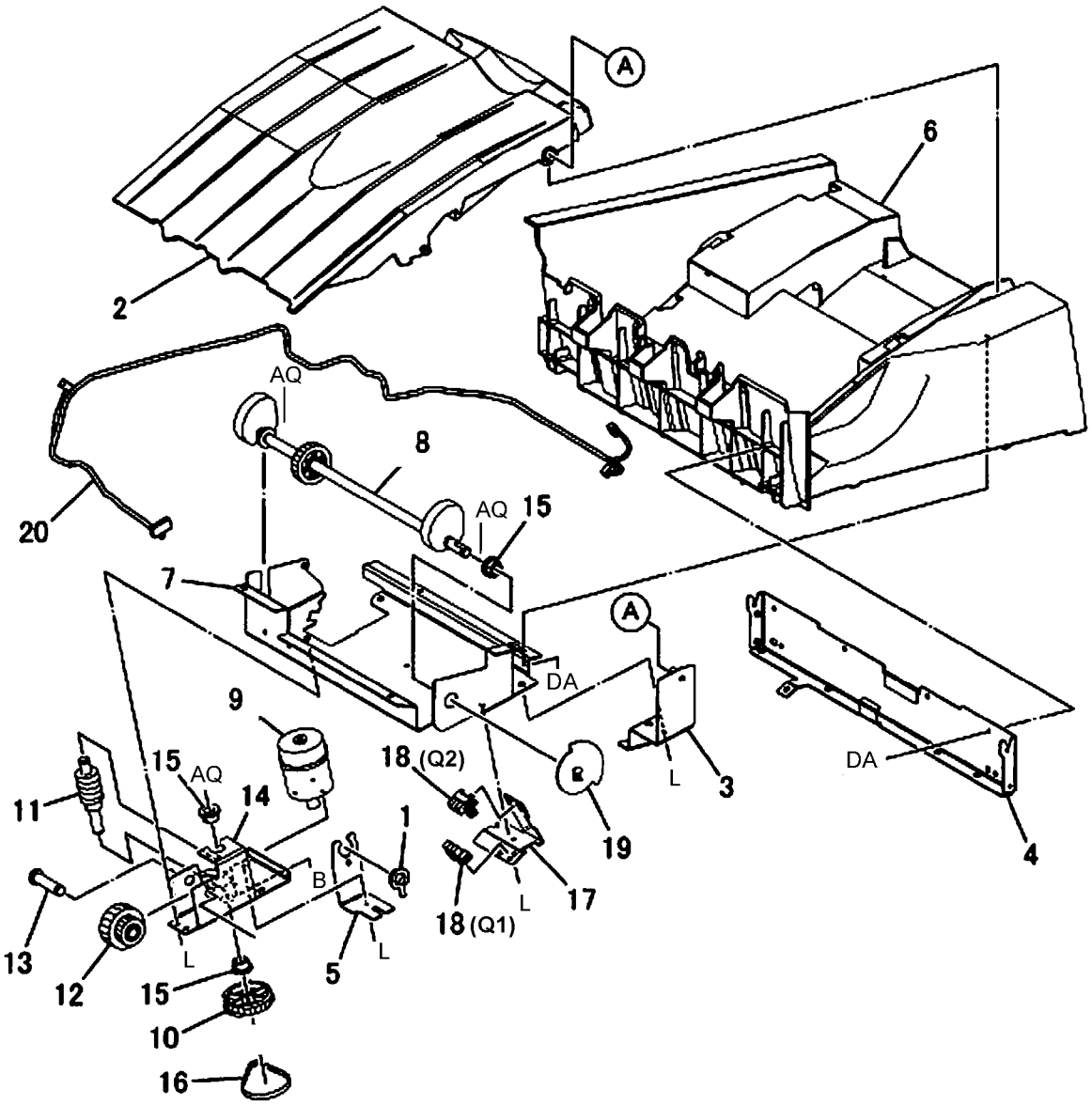

0522008A-CHG

PL 22.9 Compile Assembly (Part 1 of 2) (Integrated Office Finisher)

Item	Part	Description
5	–	Eject Shaft (P/O PL 22.9 Item 4)
6	–	Spacer (P/O PL 22.9 Item 4)
7	–	Pulley (P/O PL 22.9 Item 4)
10	–	Support (Not Spared)
14	–	Spring (P/O PL 22.9 Item 8)
15	–	Eject Motor, Set Clamp Motor (P/O PL 22.9 Item 8)
16	–	Bracket (P/O PL 22.9 Item 8)

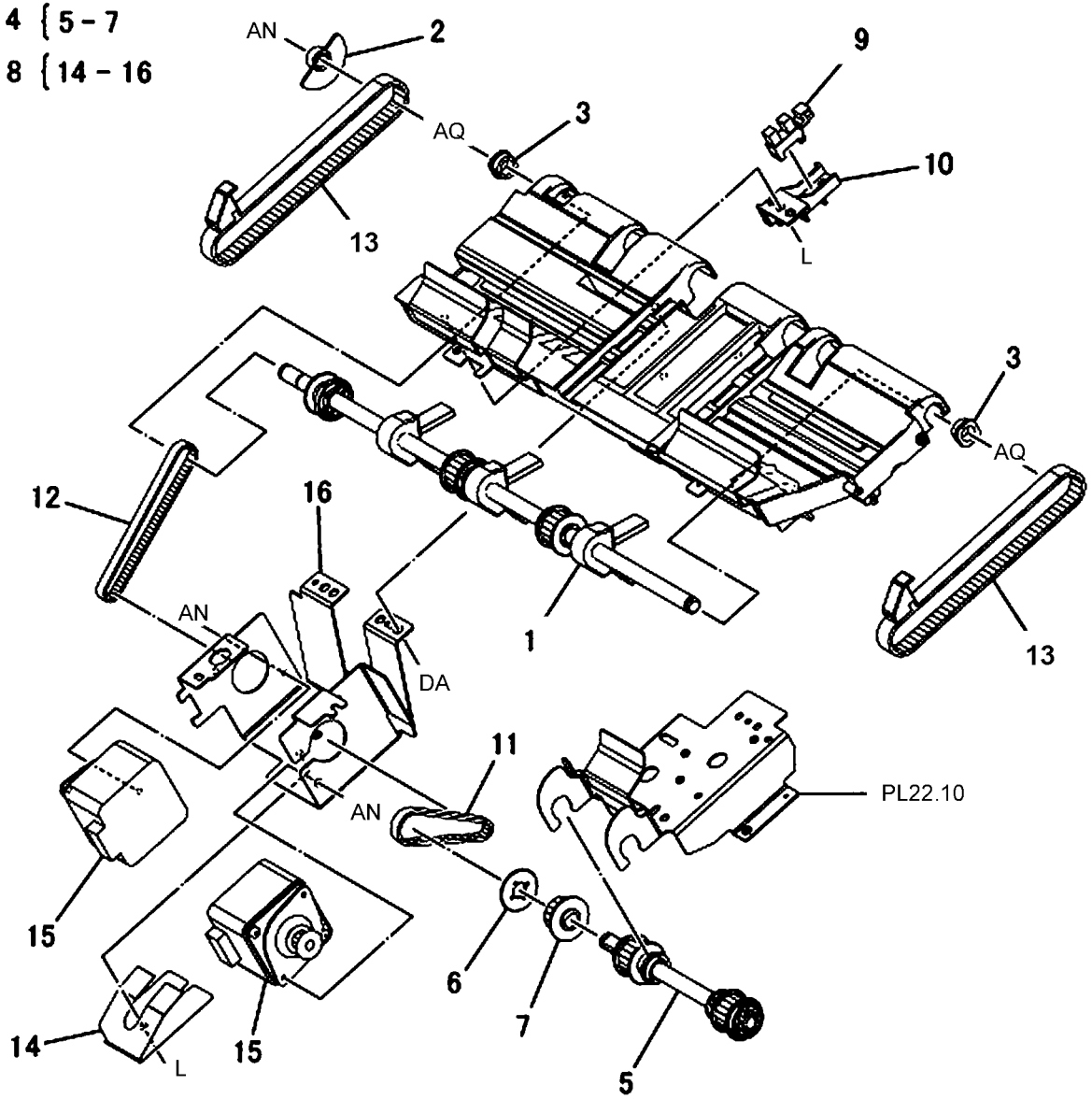

0522009A-CHG

PL 22.10 Compile Assembly (Part 2 of 2) (Integrated Office Finisher)

Item	Part	Description
2	–	Bracket (P/O PL 22.10 Item 1)
3	–	Wire Harness (P/O PL 22.10 Item 1)
5	–	Support (Not Spared)
8	–	Bracket (Not Spared)
11	–	Bracket (Not Spared)
12	–	Wire Harness (Not Spared)
15	–	Front/Rear Tamper Motor (P/O PL 22.10 Item 14)
16	–	Bracket (P/O PL 22.10 Item 14)

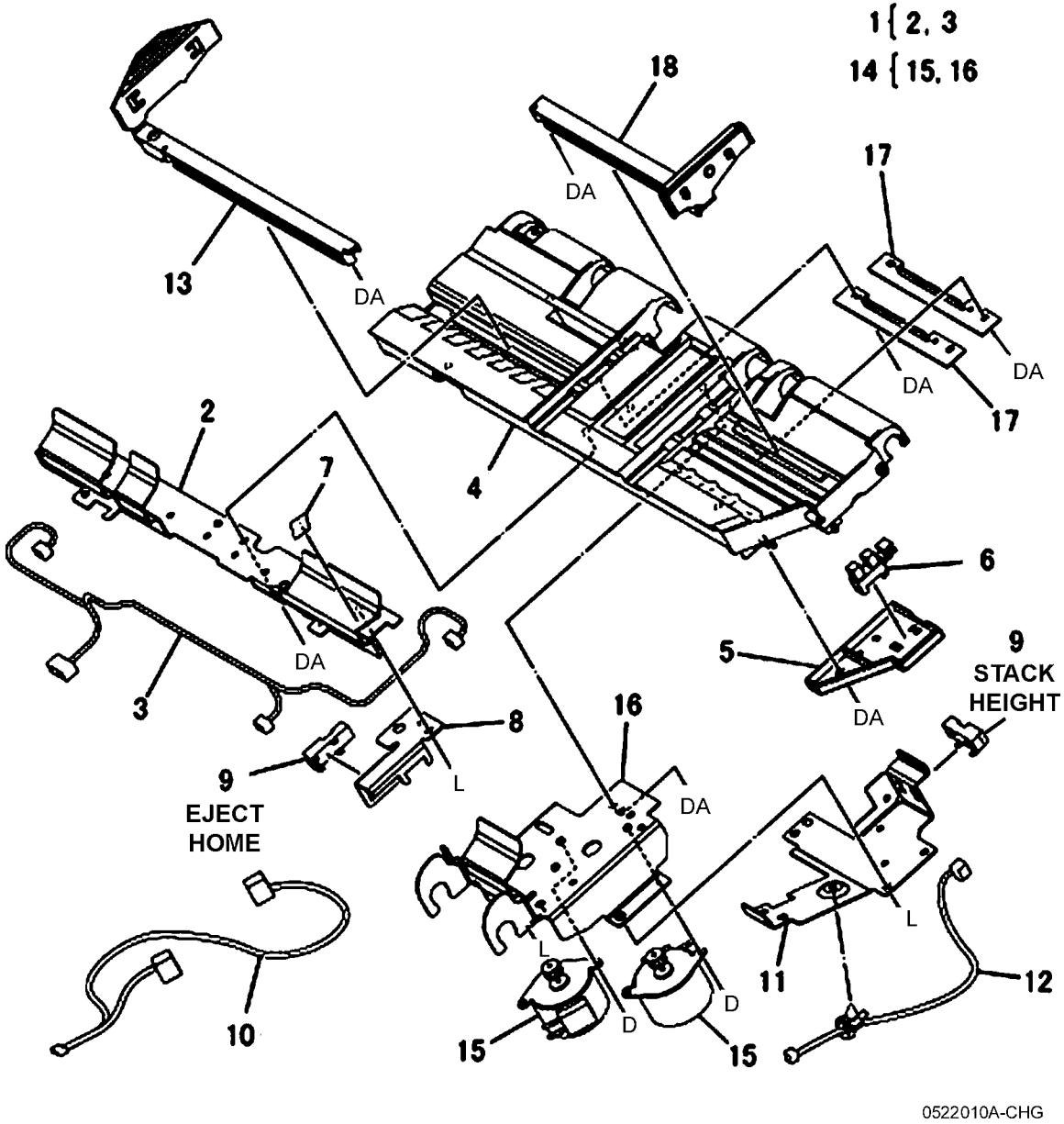

PL 23.1 H-Transport Assembly (1 of 5) (Office Finisher LX)

Item	Part	Description
3	–	Docking Plate (P/O PL 23.1 Item 2)
4	–	Side Guide (P/O PL 23.1 Item 2)
5	–	Center Guide (P/O PL 23.1 Item 2)
9	–	Finisher LX Assembly (Not Spared) (REP 13.5)

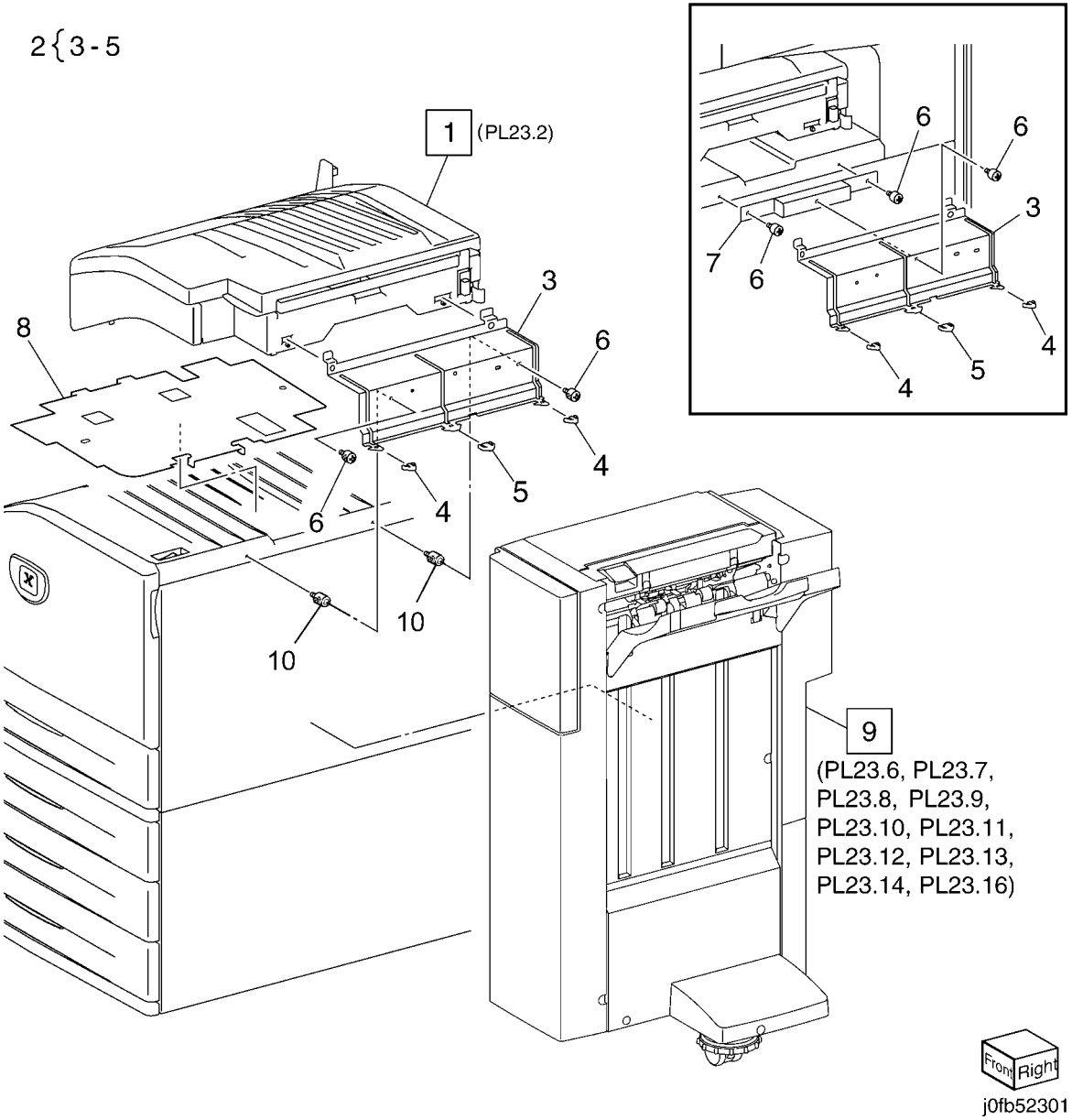

PL 23.2 H - Transport Assembly (2 of 5) (Office Finisher LX)

Item	Part	Description
2	–	Left Cover (P/O PL 23.2 Item 1)
3	–	Paper Guide (P/O PL 23.2 Item 1)
5	–	Lower Chute Assembly (P/O PL 23.1 Item 1)
6	–	Lower Chute Assembly (P/O PL 23.2 Item 5)
12	–	Wire Harness (Not Spared)

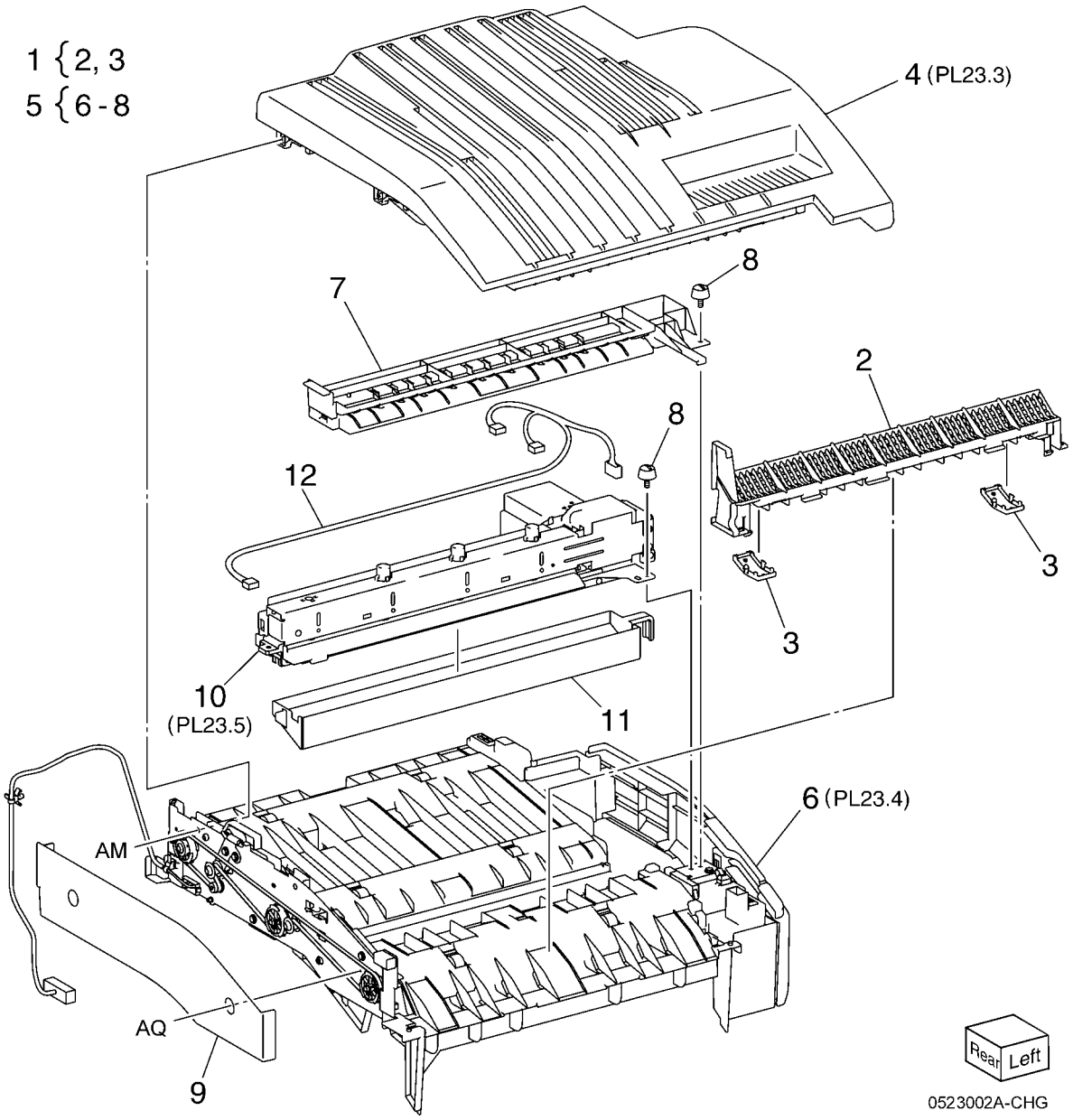

PL 23.3 H - Transport Assembly (3 of 5) (Office Finisher LX)

Item	Part	Description
1	–	Bracket (P/O PL 23.2 Item 4)
3	–	Left Chute (P/O PL 23.3 Item 2)
4	–	Pinch Spring (P/O PL 23.3 Item 2)
5	–	Pinch Roller (P/O PL 23.3 Item 2)
7	–	Right Chute (P/O PL 23.3 Item 6)
12	–	H - Transport Counter Balance (Right) (P/O PL 23.2 Item 4)

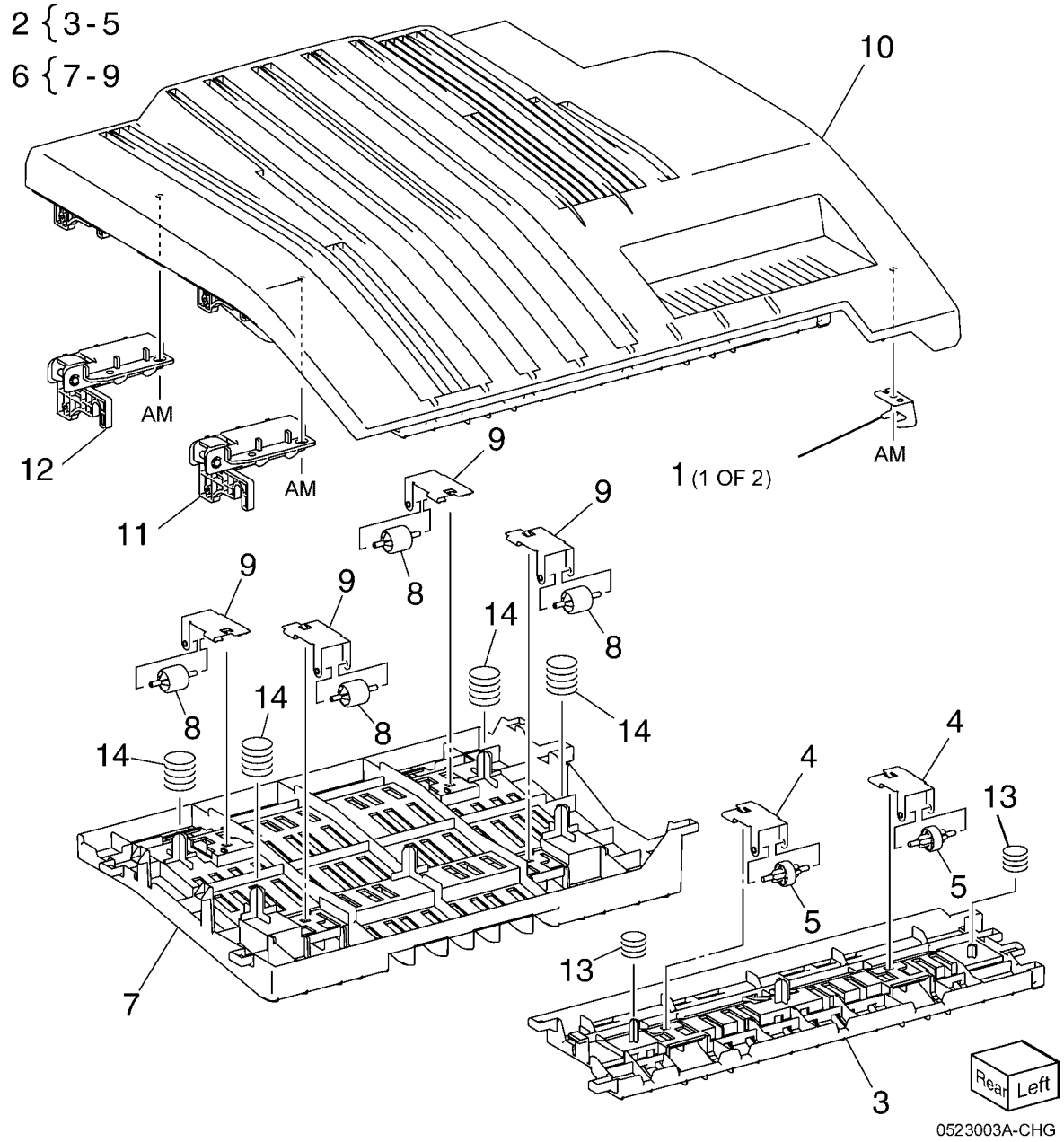

PL 23.4 H - Transport Assembly (4 of 5) (Office Finisher LX)

Item	Part	Description
1	–	Lower Chute (P/O PL 23.2 Item 6)
2	–	Magnet (P/O PL 23.1 Item 1)
4	–	Sensor Bracket (P/O PL 23.1 Item 1)
10	–	Hinge (P/O PL 23.4 Item 7)
11	–	Bracket (P/O PL 23.2 Item 6)
12	–	Rear Frame Assembly (P/O PL 23.2 Item 6)
13	–	H - Transport Motor (P/O PL 23.1 Item 1) (REP 13.4)
17	–	Tension Bracket (P/O PL 23.2 Item 6)
30	–	Cover (Not Spared)
31	–	Bracket (Not Spared)

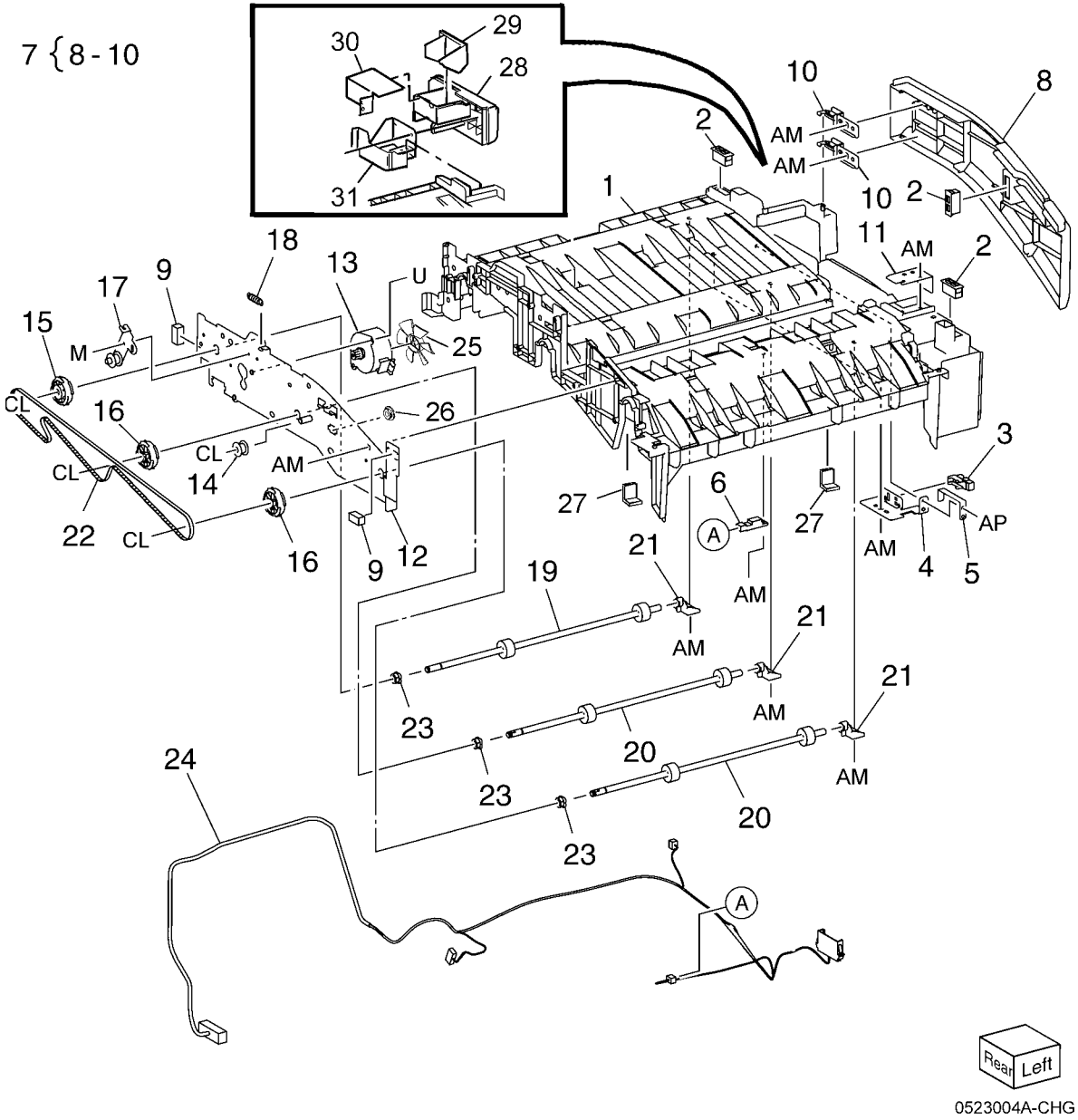

PL 23.5 H - Transport Assembly (5 of 5) (Office Finisher LX)

Item	Part	Description
1	–	Punch Motor (P/O PL 23.2 Item 10)
2	–	Punch Lower Cover (P/O PL 23.2 Item 10)
3	–	Punch Motor Cover (P/O PL 23.2 Item 10)
4	–	Sensor Bracket (P/O PL 23.2 Item 10)
5	–	Punch Encoder Sensor, Punch Home Sensor, Punch Box Set Sensor (P/O PL 23.2 Item 10)
6	–	Punch Frame Assembly (P/O PL 23.2 Item 10)
7	–	Encoder/Gear Assembly (P/O PL 23.2 Item 10)
8	–	Gear (P/O PL 23.2 Item 10)
9	–	Motor Bracket (P/O PL 23.2 Item 10)
10	–	Punch Top Cover (P/O PL 23.2 Item 10)
11	–	Bracket (P/O PL 23.2 Item 10)

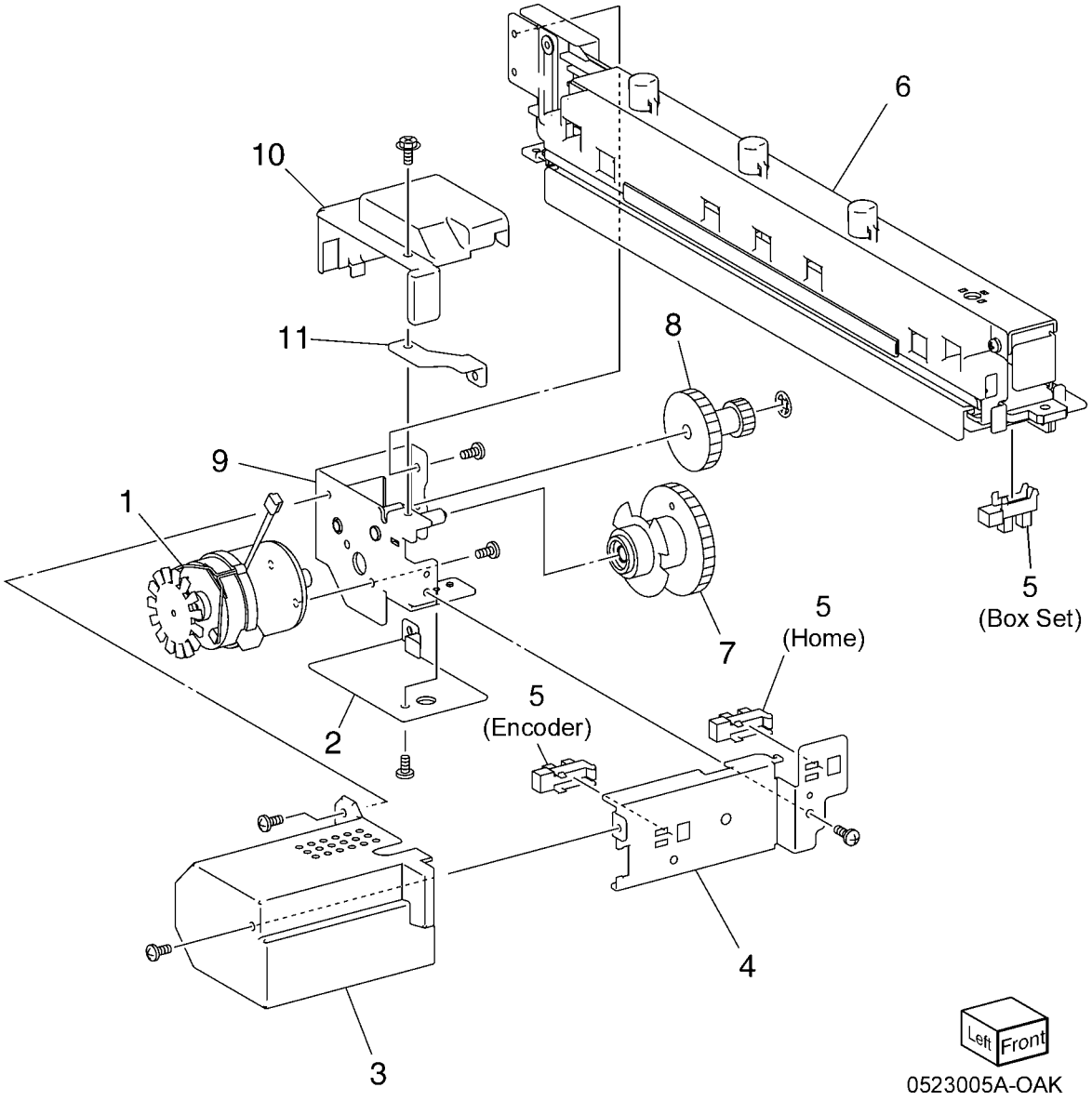

PL 23.6 Finisher Covers (Office Finisher LX)

Item	Part	Description
1	–	Plate (Not Spared)
2	–	Lower Plate (Not Spared)
5	–	Front Door (Not Spared)
6	–	Bracket (Not Spared)
7	–	Hinge (Not Spared)
13	–	Cover (Not Spared)
14	–	Spring (Not Spared)
20	–	Base Frame Assembly (Not Spared)

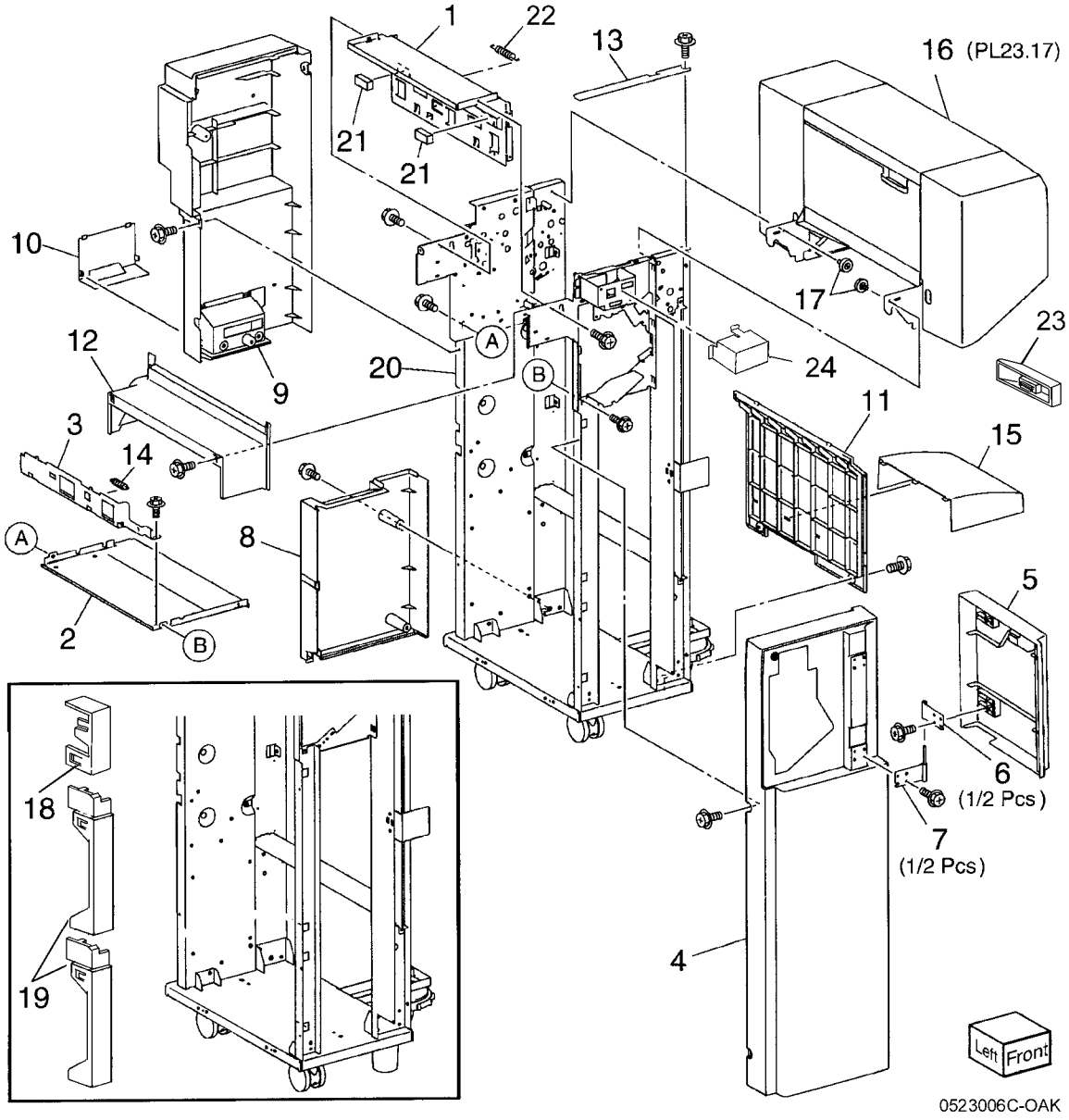

PL 23.7 Finisher Stacker (Office Finisher LX)

Item	Part	Description
2	–	Bearing (P/O PL 23.7 Item 1)
4	–	Front Stacker Belt (P/O PL 23.7 Item 1)
5	–	Clamp (P/O PL 23.7 Item 1)
6	–	Front Carriage Assembly (P/O PL 23.7 Item 1)
8	–	Bearing (P/O PL 23.7 Item 7)
9	–	Clamp (P/O PL 23.7 Item 7)
11	–	Rear Stacker Belt (P/O PL 23.7 Item 7)
12	–	Rear Carriage (P/O PL 23.7 Item 7)
13	–	Actuator (P/O PL 23.7 Item 7)
14	–	Carriage Tray (Not Spared)
16	–	Shaft (Not Spared)
23	–	Bearing (P/O PL 23.7 Item 22)
25	–	Gear (15T/37T) (P/O PL 23.7 Item 22)
26	–	Motor Bracket (P/O PL 23.7 Item 22)
27	–	Worm Shaft (P/O PL 23.7 Item 22)
29	–	Stacker Elevator Motor (P/O PL 23.7 Item 22)
30	–	Stacker Encoder Sensor Assembly (Not Spared)
31	–	Bracket (P/O PL 23.7 Item 30)
33	–	Stacker Upper Cover (REP 13.12)

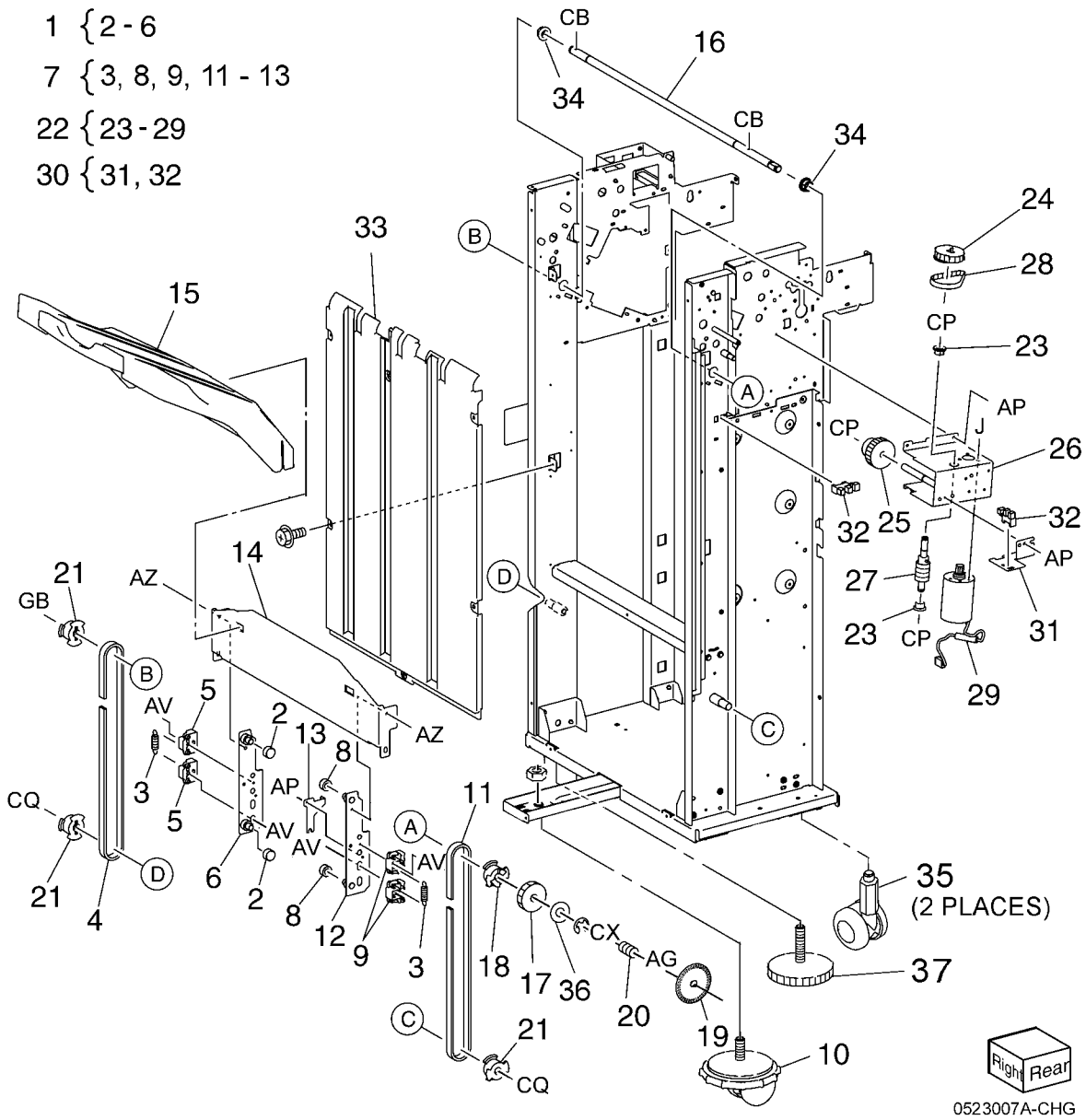

PL 23.8 Finisher Stapler (Office Finisher LX)

Item	Part	Description
1	–	Base Frame (P/O PL 23.8 Item 16)
2	–	Rail (P/O PL 23.8 Item 16)
3	–	Harness Guide
5	–	Holder (Not Spared)
6	–	Stapler Move Position Sensor Assembly (Not Spared)
7	–	Bracket (P/O PL 23.8 Item 6)
9	–	Stapler Move Motor Assembly (Not Spared)
10	–	Harness Guide (P/O PL 23.8 Item 16)
11	–	Harness Support Guide (P/O PL 23.8 Item 16)
12	–	Harness Guide (P/O PL 23.8 Item 16)
13	–	Stapler Cover (Not Spared)
14	–	Clamp (Not Spared)
15	–	Stapler Cartridge (Not Spared)
16	–	Stapler Unit (Not Spared)
17	–	Cable Band (Not Spared)
18	–	Harness Guide (Not Spared)
19	–	Stapler Motor Assembly (P/O PL 23.8 Item 9) (REP 13.15)

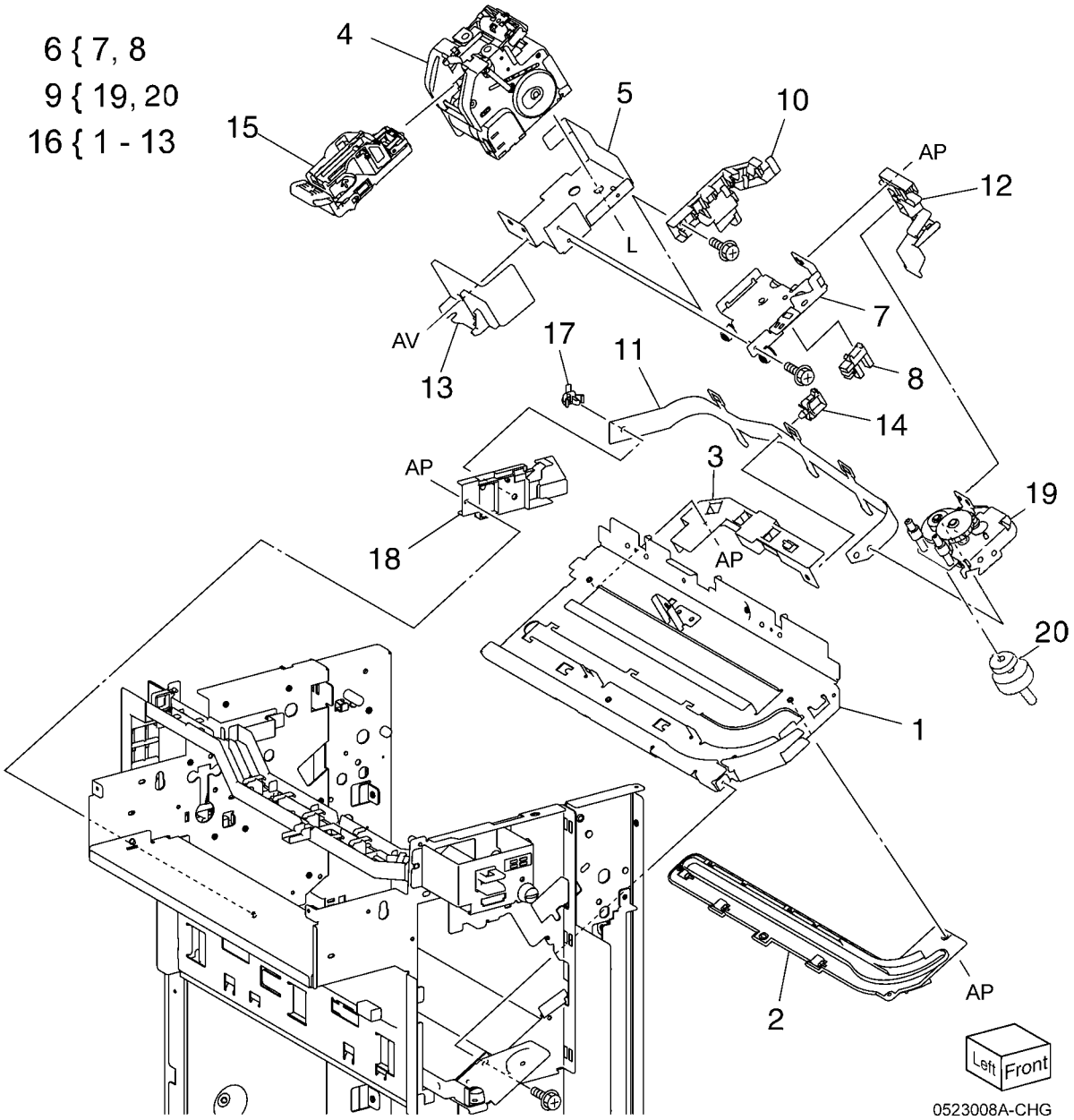

PL 23.9 Finisher Eject (1 of 5) (Office Finisher LX)

Item	Part	Description
1	–	Eject Cover Assembly (PL 23.10)
2	–	Eject Assembly (PL 23.11)
10	–	Spring (P/O PL 23.9 Item 9)
12	–	Shaft (Not Spared)
16	–	Guide Paper Shaft (P/O PL 23.9 Item 15)
17	–	Gear (20T) (P/O PL 23.9 Item 15)
18	–	Shaft (Not Spared)
24	–	Stopper (Not Spared)
25	–	Bracket (Front) (Not Spared)
26	–	Bracket (Rear) (Not Spared)
27	–	Option Switch Assembly (Not Spared)
28	–	Bracket (Not Spared)
29	–	Option Switch (Not Spared)
31	–	Bearing (Not Spared)
32	–	Clamp Arm (P/O PL 23.9 Item 3)
33	–	Roll (Not Spared)
34	–	Shaft (P/O PL 23.9 Item 3)

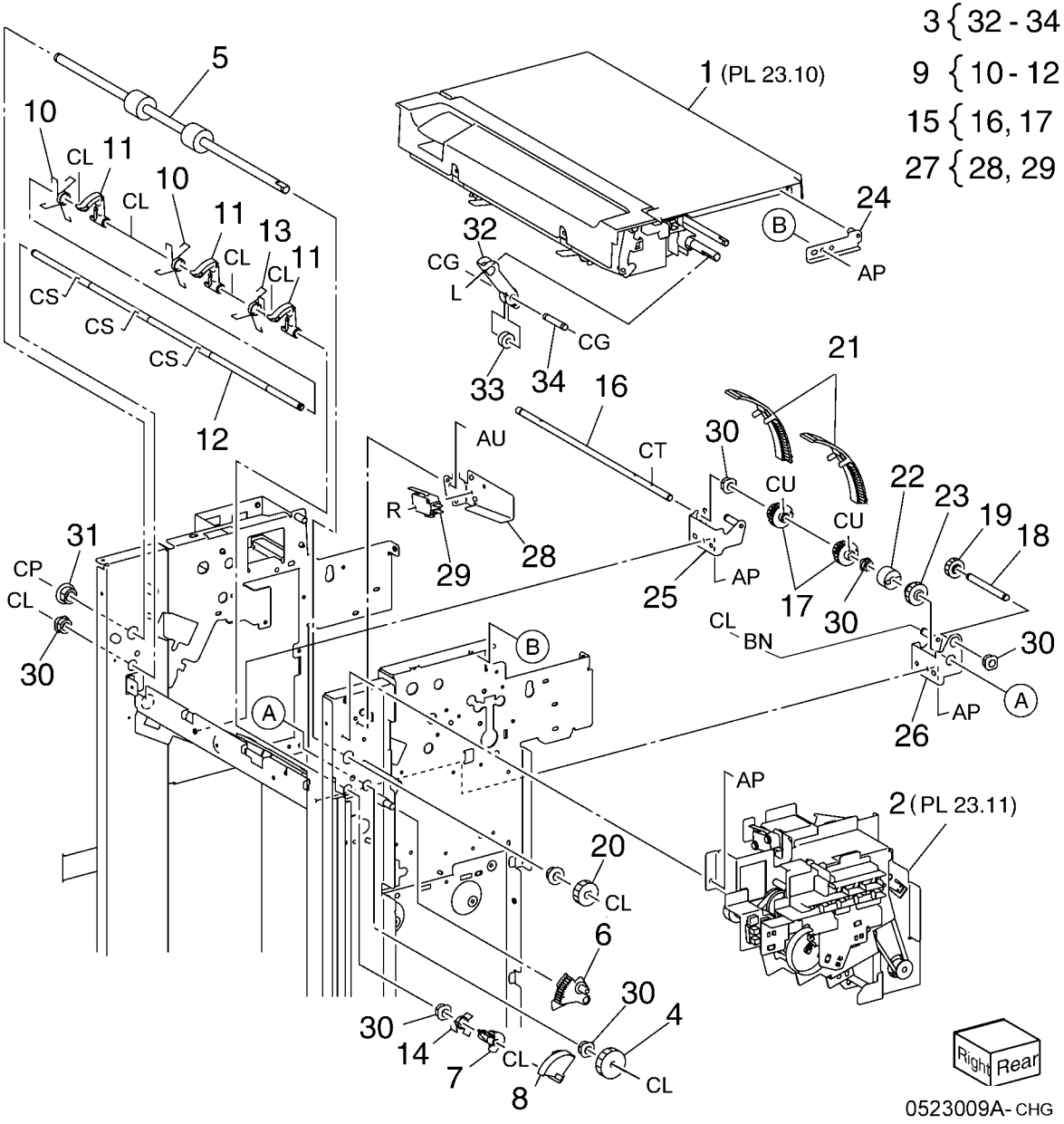

PL 23.10 Finisher Eject (2 of 5) (Office Finisher LX)

Item	Part	Description
4	–	Shaft (Not Spared)
9	–	Bracket (P/O PL 23.10 Item 8)
10	–	Damper (P/O PL 23.10 Item 8)
11	–	Sub Paddle Solenoid (P/O PL 23.10 Item 8)
12	–	Eject Roller Assembly (Not Spared)
14	–	Sub Paddle Arm (Not Spared)
16	–	Sub Paddle (P/O PL 23.10 Item 13)
17	–	Pulley (P/O PL 23.10 Item 13)
18	–	Pulley (P/O PL 23.10 Item 13)
19	–	Gear/Pulley (31T/20T) (Not Spared)
20	–	Eject Pinch Roller Assembly (Not Spared)
21	–	Bearing (P/O PL 23.10 Item 20)
23	–	Bracket (P/O PL 23.10 Item 20)
24	–	Shaft (P/O PL 23.10 Item 12)
25	–	Spring (Not Spared)
26	–	Bracket (P/O PL 23.10 Item 12)
29	–	Bearing (Not Spared)
30	–	Bearing (Not Spared)
31	–	Eject Chute Assembly (Not Spared)
32	–	Eject Eliminator (P/O PL 23.10 Item 20)

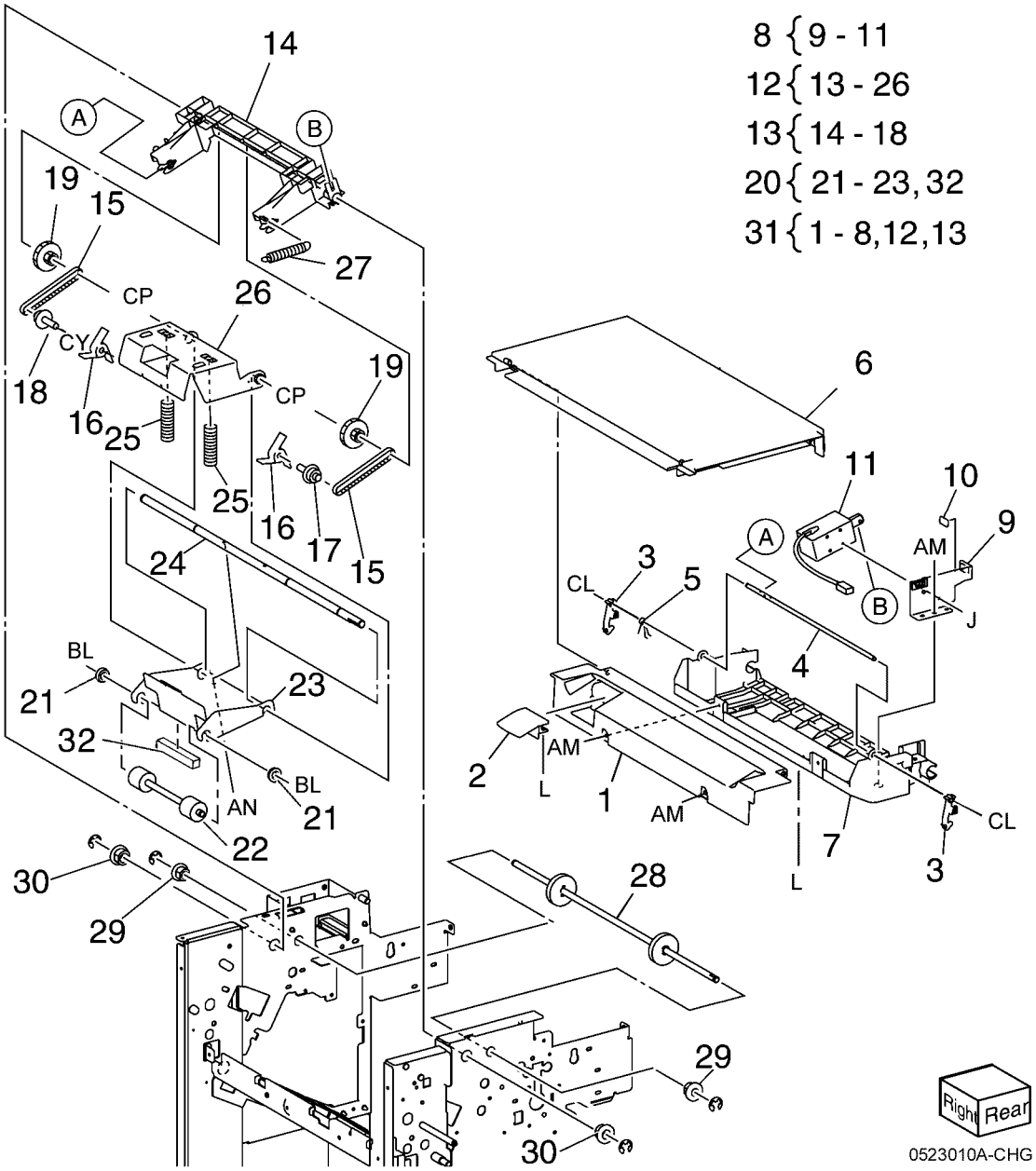

PL 23.11 Finisher Eject (3 of 5) (Office Finisher LX)

Item	Part	Description
3	–	Eject Motor Assembly (Not Spared) (REP 13.22)
5	–	Bracket (P/O PL 23.11 Item 3)
15	–	Bracket (P/O PL 23.11 Item 14)
18	–	Bracket (P/O PL 23.11 Item 17)
19	–	Eject Cover Switch (P/O PL 23.11 Item 37)
20	–	Harness Guide (Not Spared)
22	–	Eject Drive Bracket Assembly (Not Spared)
23	–	Bracket (P/O PL 23.11 Item 22)
24	–	Bracket (P/O PL 23.11 Item 22)
25	–	Shaft (P/O PL 23.11 Item 22)
28	–	Bracket (P/O PL 23.11 Item 22)
29	–	Shaft (P/O PL 23.11 Item 22)
32	–	Sleeve Bearing (P/O PL 23.11 Item 22)
35	–	Bracket (P/O PL 23.11 Item 34)
36	–	Bracket (P/O PL 23.11 Item 37)
37	–	Eject Cover Switch Assembly (Not Spared)

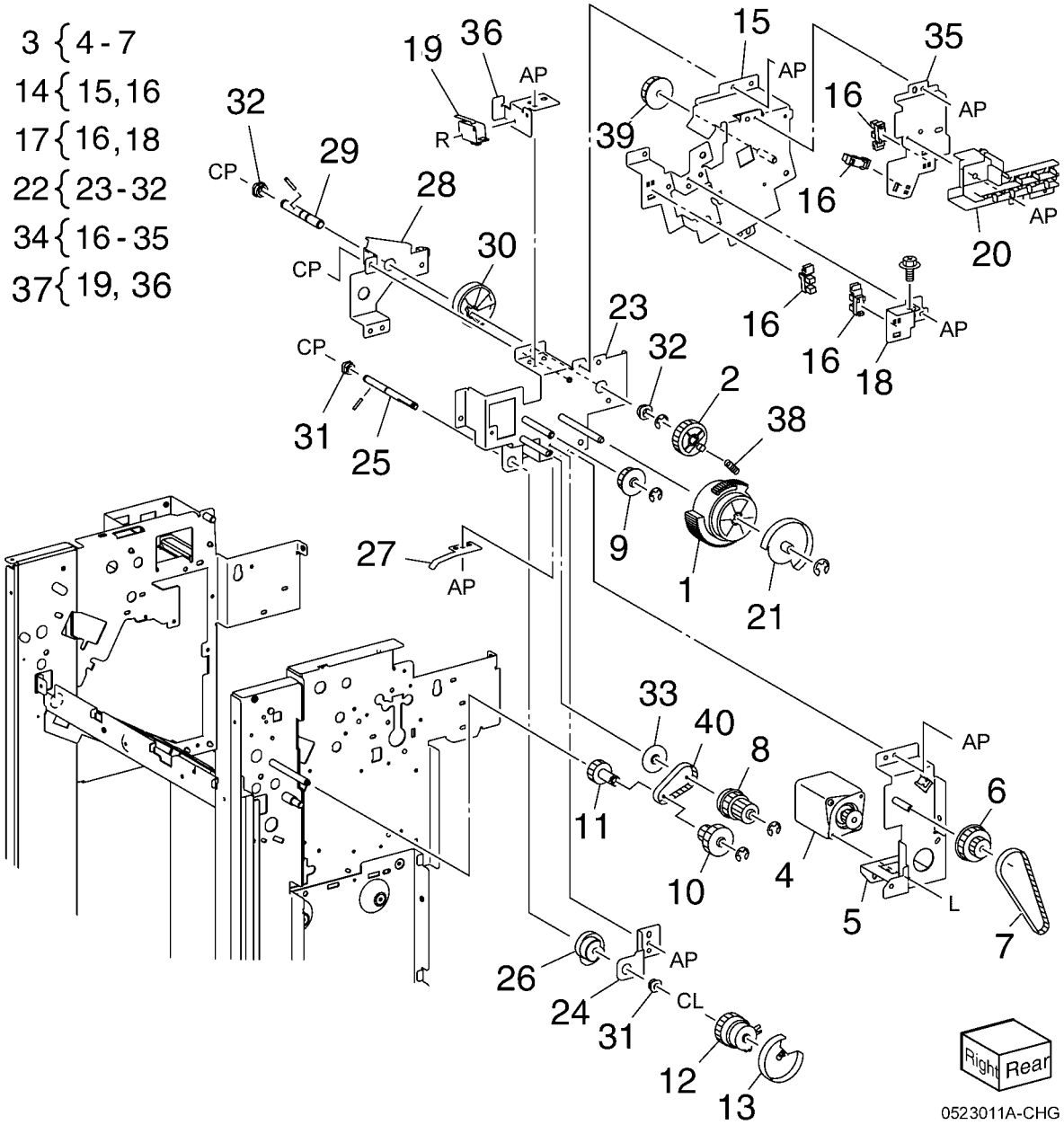

PL 23.12 Finisher Eject (4 of 5) (Office Finisher LX)

Item	Part	Description
3	–	Compiler Center Paper Guide (P/O PL 23.12 Item 1)
4	–	Compiler Rear Paper Guide (P/O PL 23.12 Item 1)
5	–	Bracket (P/O PL 23.12 Item 1)
7	–	Rack (Front) (P/O PL 23.12 Item 1)
10	–	Spring (P/O PL 23.12 Item 1)
11	–	Tamper Front Guide (P/O PL 23.12 Item 1)
12	–	Tamper Rear Guide (P/O PL 23.12 Item 1)
13	–	Compiler Tray (P/O PL 23.12 Item 1)
14	–	Paper Paddle Guide (P/O PL 23.12 Item 1)
16	–	Paper End Guide (P/O PL 23.12 Item 1)
17	–	Paper Tray Guide (P/O PL 23.12 Item 1)
18	–	Spring (P/O PL 23.12 Item 1)
19	–	Spring (P/O PL 23.12 Item 1)
20	–	Harness Guide (P/O PL 23.12 Item 1)

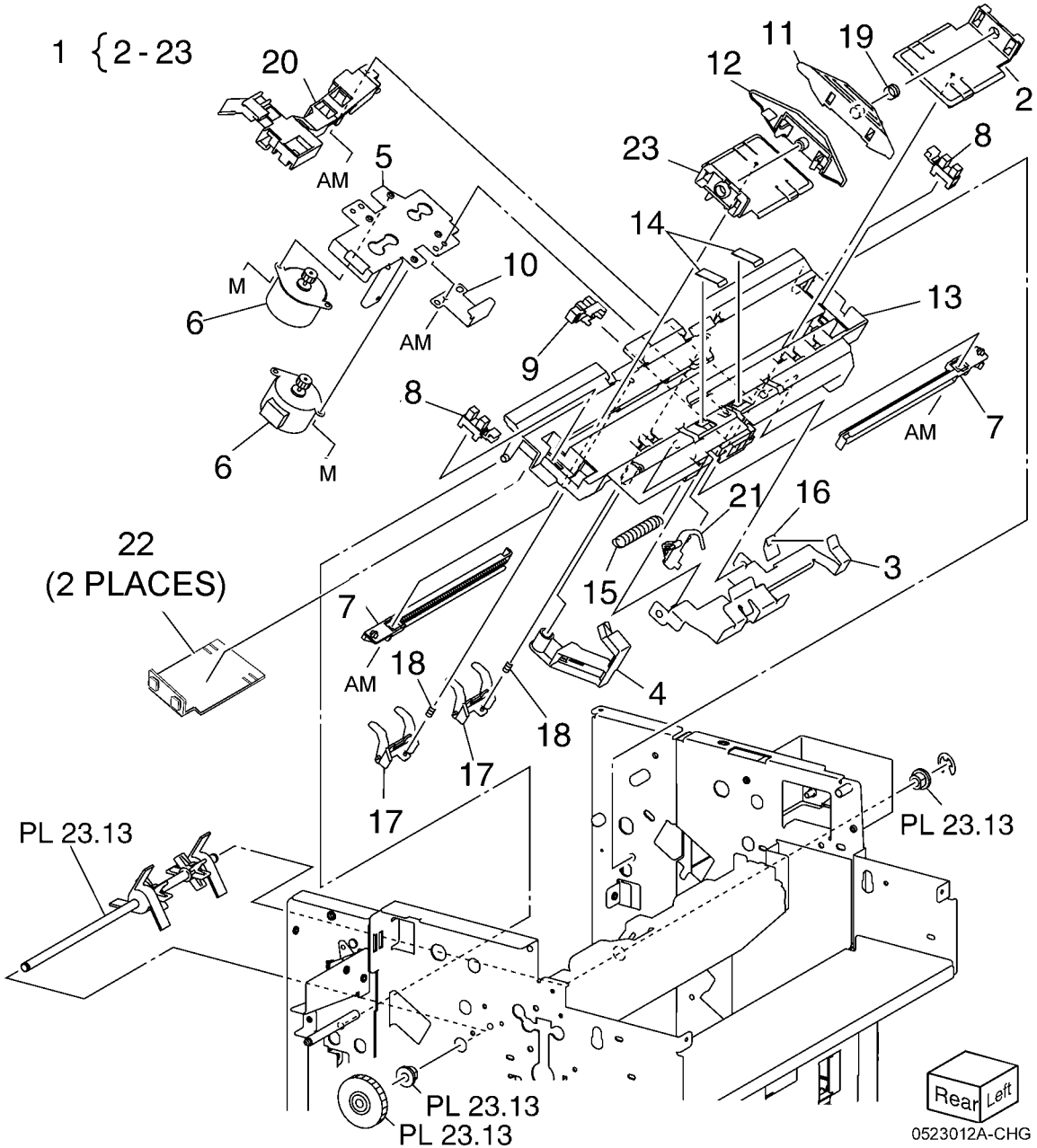

PL 23.13 Finisher Eject (5 of 5) (Office Finisher LX)

Item	Part	Description
6	–	Gear/Pulley (27T/30T)
13	–	Paddle Shaft (P/O PL 23.13 Item 11)

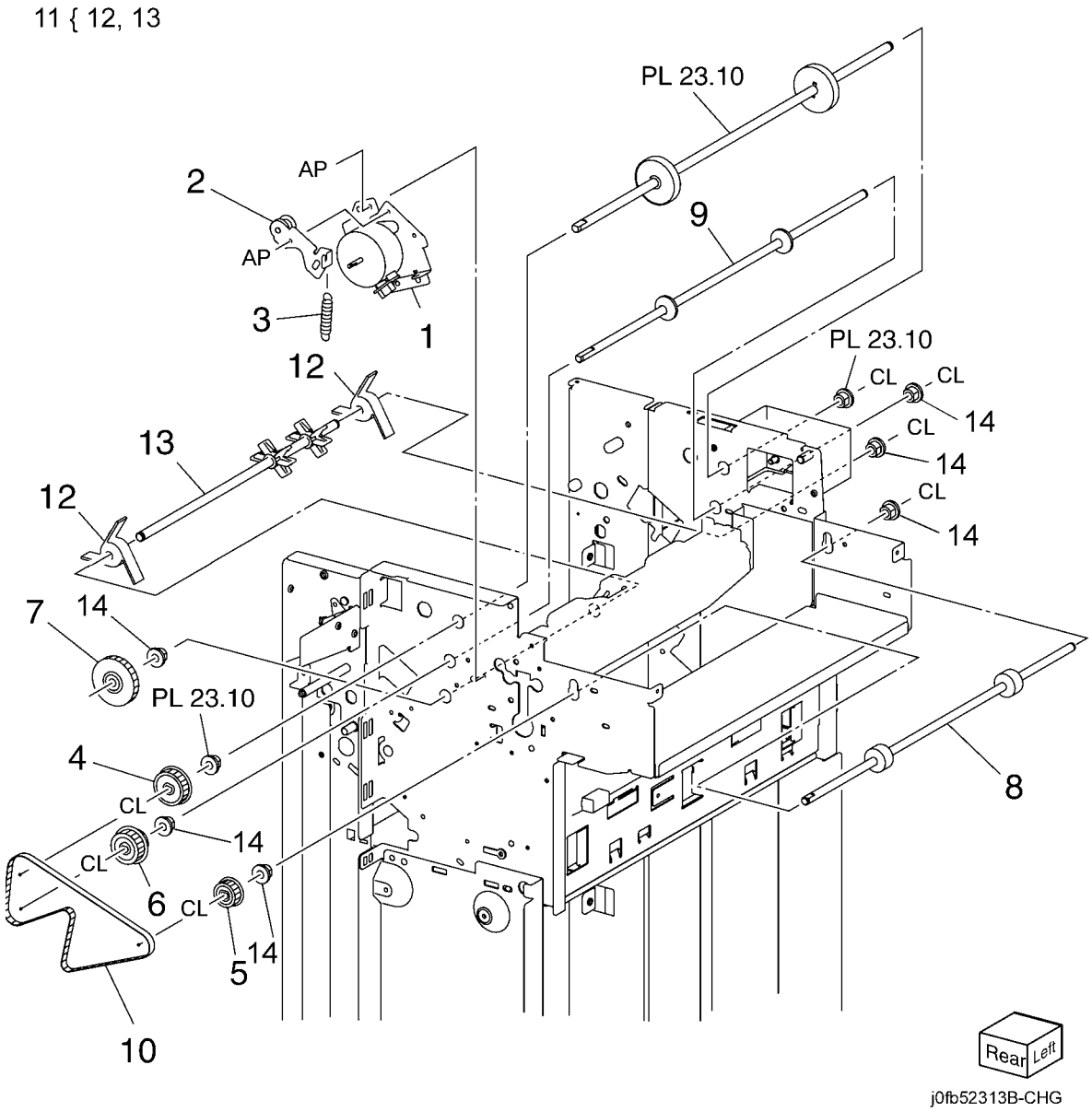

PL 23.14 Finisher Exit/Folder Assembly (Office Finisher LX)

Item	Part	Description
1	–	Lower Chute Assembly (Not Spared)
2	–	Lower Chute (P/O PL 23.14 Item 1)
7	–	Exit Upper Chute (P/O PL 23.14 Item 6)
12	–	Exit Lower Chute (P/O PL 23.14 Item 11)
14	–	Spring (P/O PL 23.14 Item 13)
15	–	Pinch Roll (P/O PL 23.14 Item 13)
17	–	Lower Chute (P/O PL 23.14 Item 16)
18	–	Upper Chute (P/O PL 23.14 Item 16)
20	–	Chute Assembly (Not Spared)

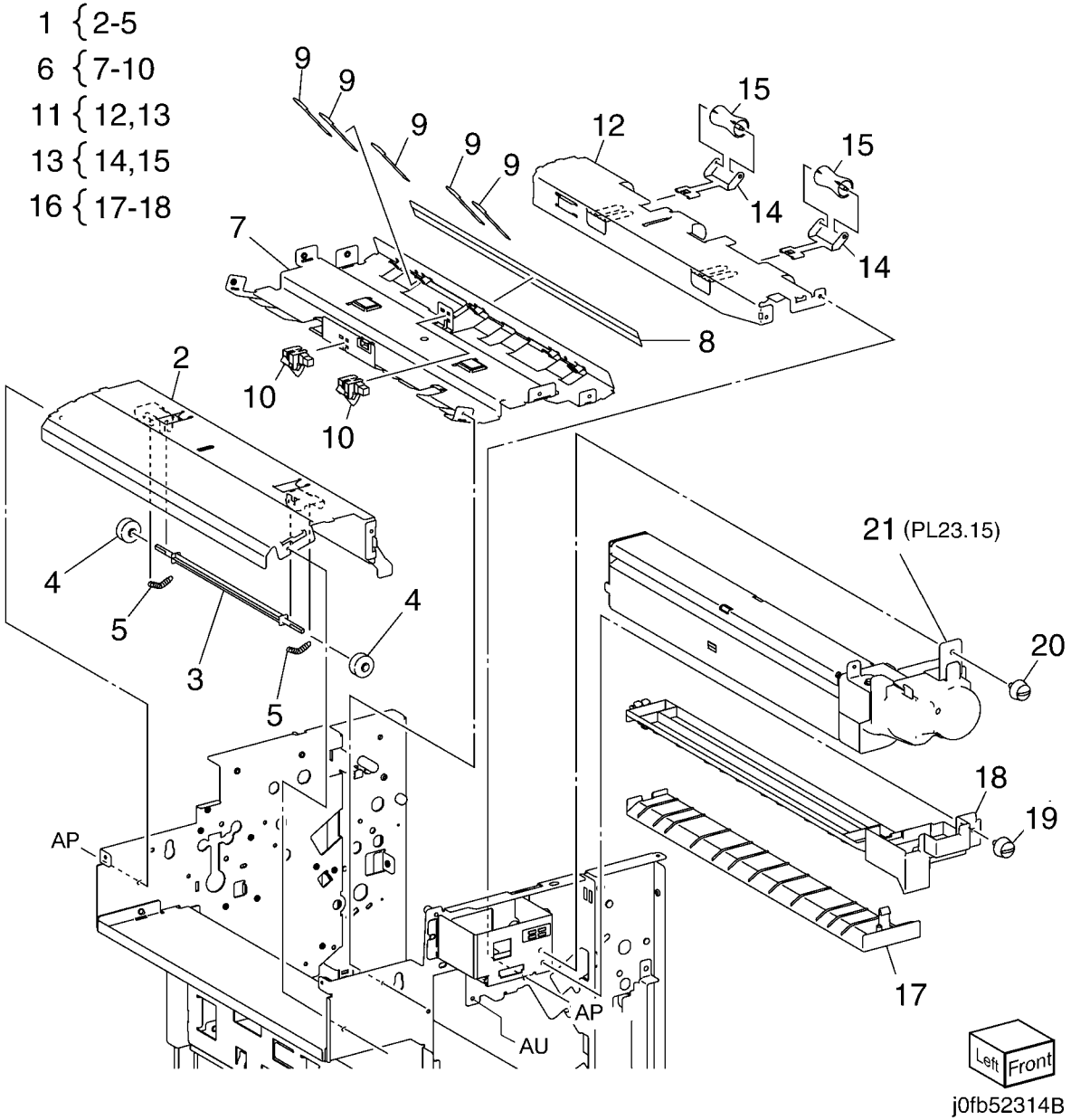

PL 23.15 Folder Assembly (Office Finisher LX)

Item	Part	Description
1	–	Upper Chute (P/O PL 23.14 Item 21)
2	–	Upper Plate (P/O PL 23.14 Item 21)
3	–	Knife Assembly (P/O PL 23.14 Item 21)
4	–	Blade Holder (P/O PL 23.15 Item 3)
5	–	Lower Holder 1 (P/O PL 23.15 Item 3)
6	–	Lower Holder 2 (P/O PL 23.15 Item 3)
7	–	Bracket (P/O PL 23.15 Item 3)
8	–	Blade (P/O PL 23.15 Item 3)
9	–	Spring (P/O PL 23.14 Item 2)
10	–	Frame (P/O PL 23.14 Item 21)
11	–	Front Cover (P/O PL 23.14 Item 21)
12	–	Bracket (P/O PL 23.14 Item 21)
13	–	Folder Knife Motor Assembly (P/O PL 23.14 Item 21)
14	–	Motor Bracket (P/O PL 23.15 Item 13)
15	–	Folder Knife Motor (P/O PL 23.15 Item 13)
16	–	Folder Home Sensor (P/O PL 23.15 Item 13)
17	–	Cam Shaft Assembly (P/O PL 23.14 Item 21)
18	–	Guide (P/O PL 23.14 Item 21)
19	–	Gear (28T/8T) (P/O PL 23.14 Item 21)
20	–	Encoder (P/O PL 23.14 Item 21)
21	–	Bearing (P/O PL 23.14 Item 21)
22	–	Gear (12T/27T) (P/O PL 23.14 Item 21)
23	–	Gear (12T/30T) (P/O PL 23.14 Item 21)
24	–	Gear (12T/51T) (P/O PL 23.14 Item 21)
25	–	Wire Harness (P/O PL 23.14 Item 21)

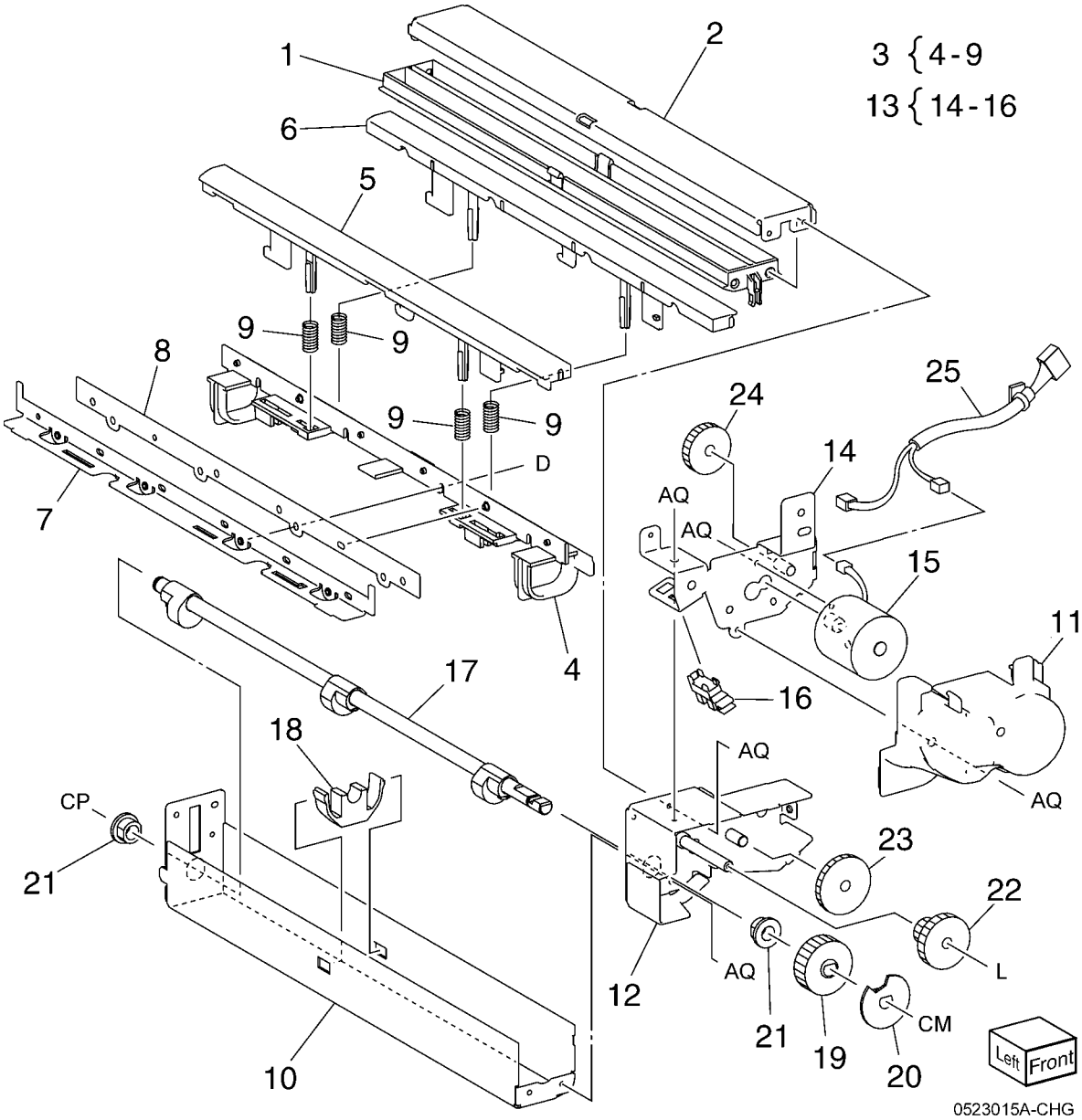

PL 23.16 Finisher Electrical (Office Finisher LX)

Item	Part	Description
1	–	LVPS Cover (Not Spared)
3	–	Harness Guide (Not Spared)
4	–	Harness Guide (Not Spared)
5	–	Harness Guide (Not Spared)
6	–	Magnet (Not Spared)
8	–	Wire Harness (Not Spared)
9	–	Wire Harness (Not Spared)
10	–	Wire Harness (Not Spared)
11	–	Wire Harness (Not Spared)
12	–	Wire Harness (Not Spared)
14	–	Wire Harness (Not Spared)
15	–	Wire Harness (Not Spared)
18	–	Bracket (Not Spared)

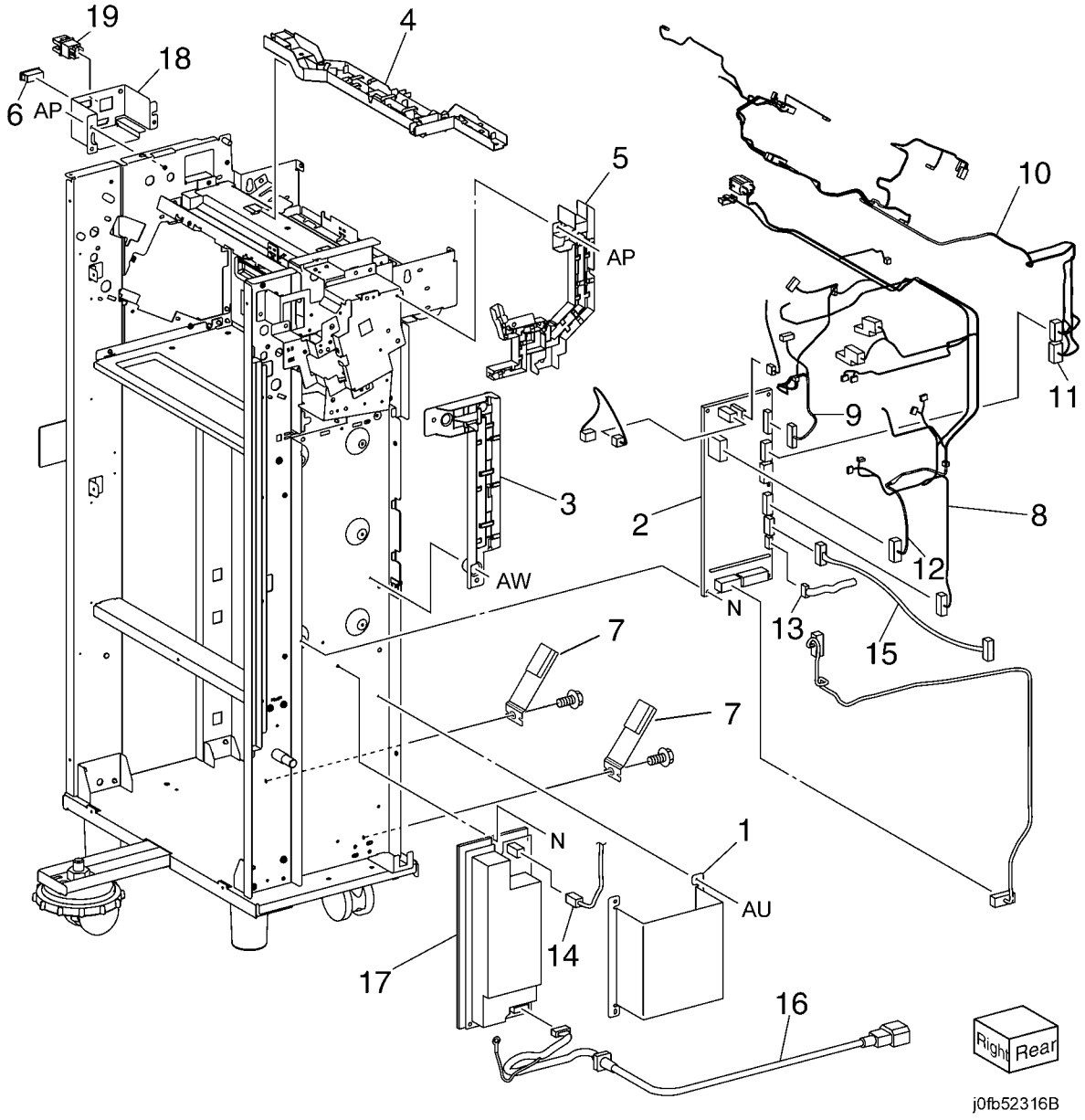

PL 23.17 Booklet Cover (Office Finisher LX)

Item	Part	Description
1	–	Frame Assembly (REF: PL 23.21)
2	–	Booklet Stapler Assembly (ADJ 12.2)
4	–	Front Cover (Not Spared) (REP 13.32)
5	–	Top Cover (Not Spared) (REP 13.34)
8	–	Left Cover (Not Spared) (REP 13.36)
9	–	Harness Guide (Not Spared)

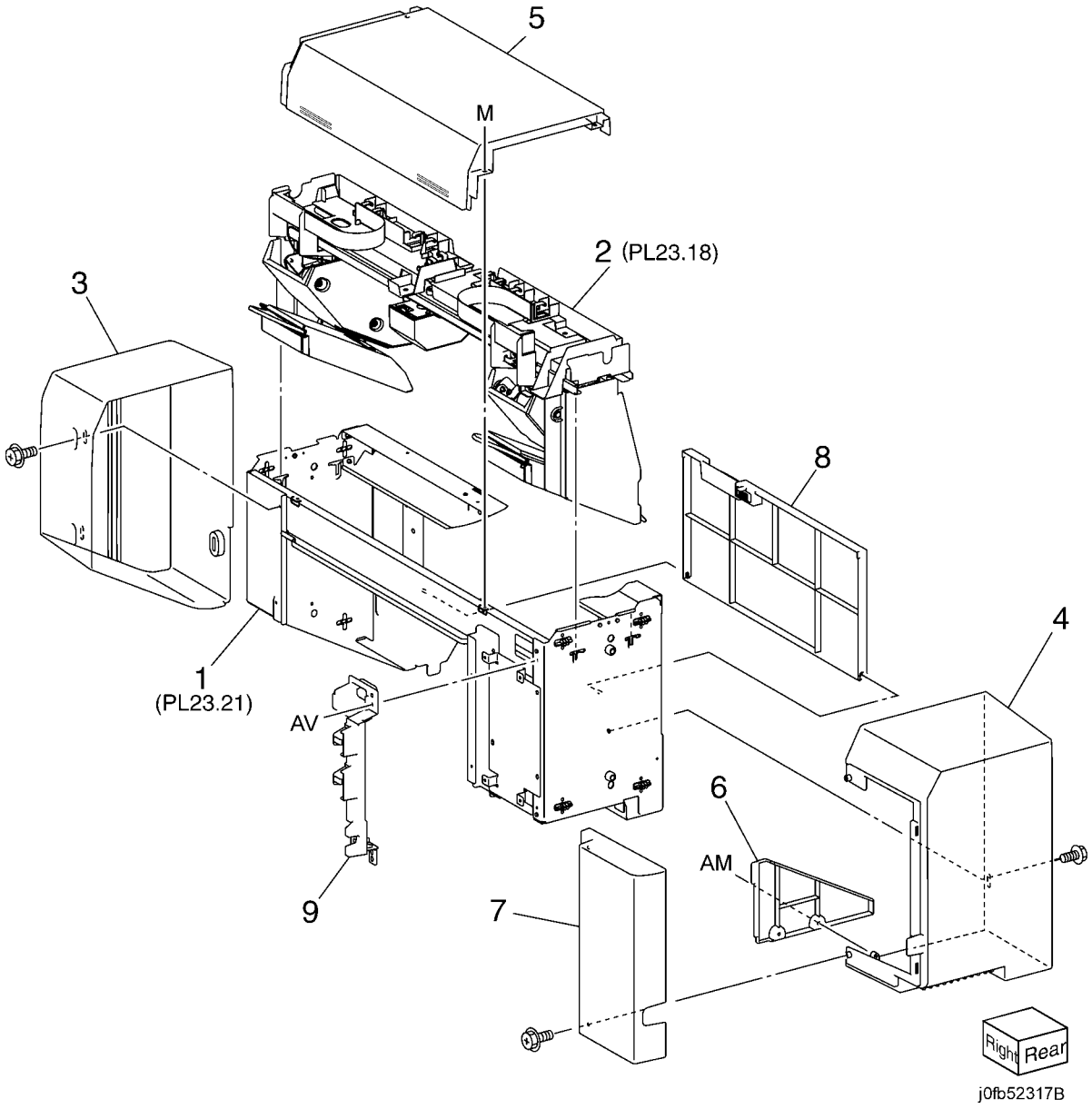

PL 23.18 Booklet Stapler Assembly (Office Finisher LX)

Item	Part	Description
1	–	Front Carriage Rail (Not Spared)
2	–	Frame (P/O PL 23.18 Item 1)
3	–	Core (P/O PL 23.18 Item 1)
5	–	Belt (P/O PL 23.18 Item 4)
6	–	Bracket (P/O PL 23.18 Item 4)
7	–	Gear (12T) (P/O PL 23.18 Item 4)
8	–	Pulley (50T) (P/O PL 23.18 Item 4)
10	–	Wire Harness (P/O PL 23.18 Item 4)
11	–	Sensor Bracket Assembly (P/O PL 23.18 Item 1)
12	–	Sensor Bracket (P/O PL 23.18 Item 11)
14	–	Rear Rack Gear (Not Spared)
15	–	Carriage Assembly (Not Spared)
16	–	Carriage (P/O PL 23.18 Item 15)
17	–	Core (P/O PL 23.18 Item 15)
18	–	Core (Not Spared)
19	–	Front Rack Gear (Not Spared)
22	–	Harness Strap (P/O PL 23.18 Item 21)
24	–	Harness Guide (Front) (Not Spared)
25	–	Harness Guide (Rear) (Not Spared)
26	–	Rear Rack Guide (Not Spared)

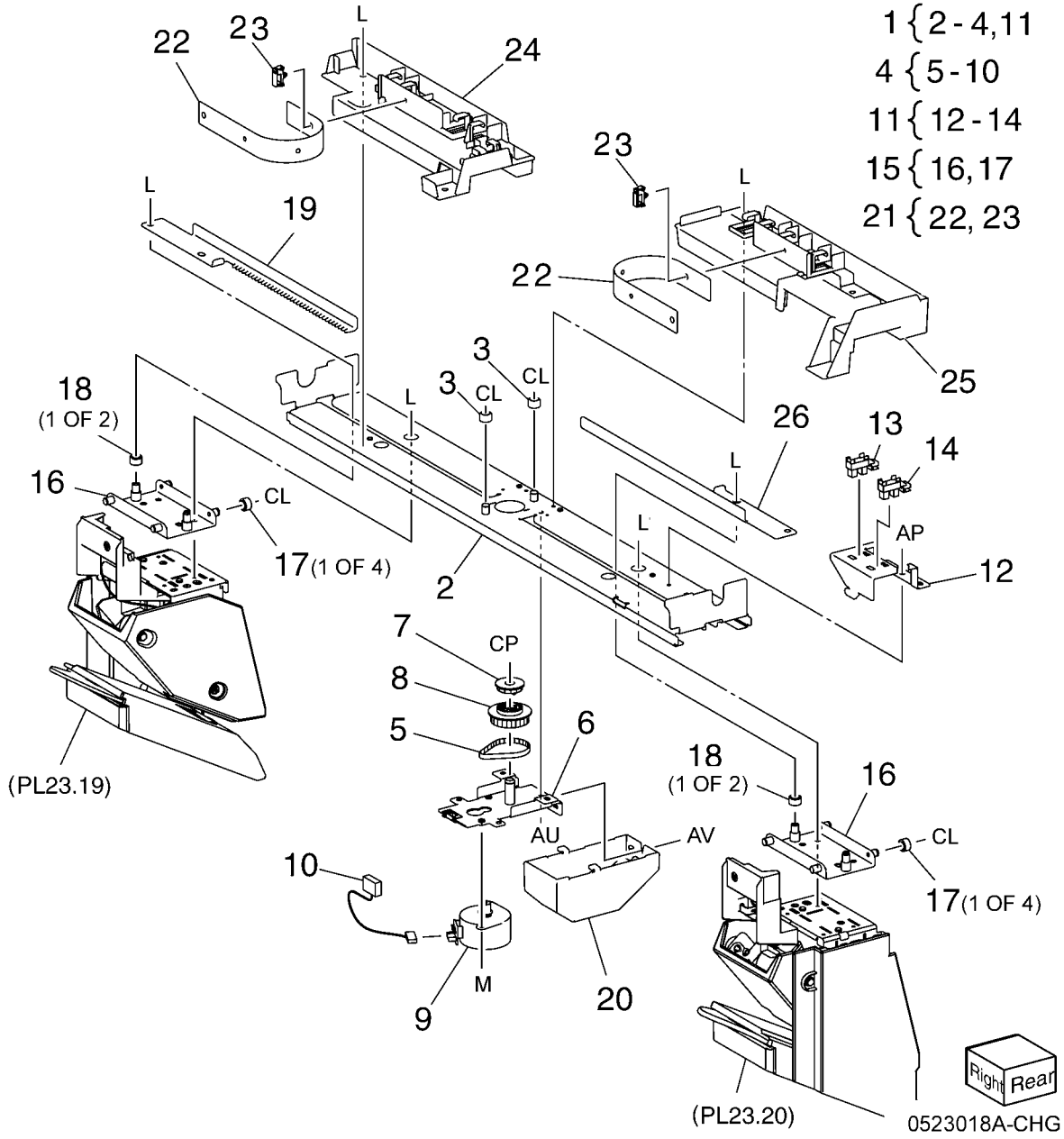

PL 23.19 Booklet Front Stapler Assembly (Office Finisher LX)

Item	Part	Description
2	–	Bracket (P/O PL 23.19 Item 1)
3	–	Rear Cover (P/O PL 23.19 Item 1)
4	–	Bracket (P/O PL 23.19 Item 1)
6	–	Sub Chute (P/O PL 23.19 Item 1)
7	–	Support (P/O PL 23.19 Item 1)
8	–	Spring (P/O PL 23.19 Item 1)
9	–	Exit Sub Chute (P/O PL 23.19 Item 1)
10	–	Spring (P/O PL 23.19 Item 1)
11	–	Front Cover (P/O PL 23.19 Item 1)
13	–	Booklet Stapler Assembly (P/O PL 23.19 Item 1) (REP 13.37, ADJ 12.2)
14	–	Wire Harness (P/O PL 23.19 Item 1)
15	–	Guide (P/O PL 23.19 Item 1)
16	–	Booklet Staple Cassette Assembly (Not Spared)

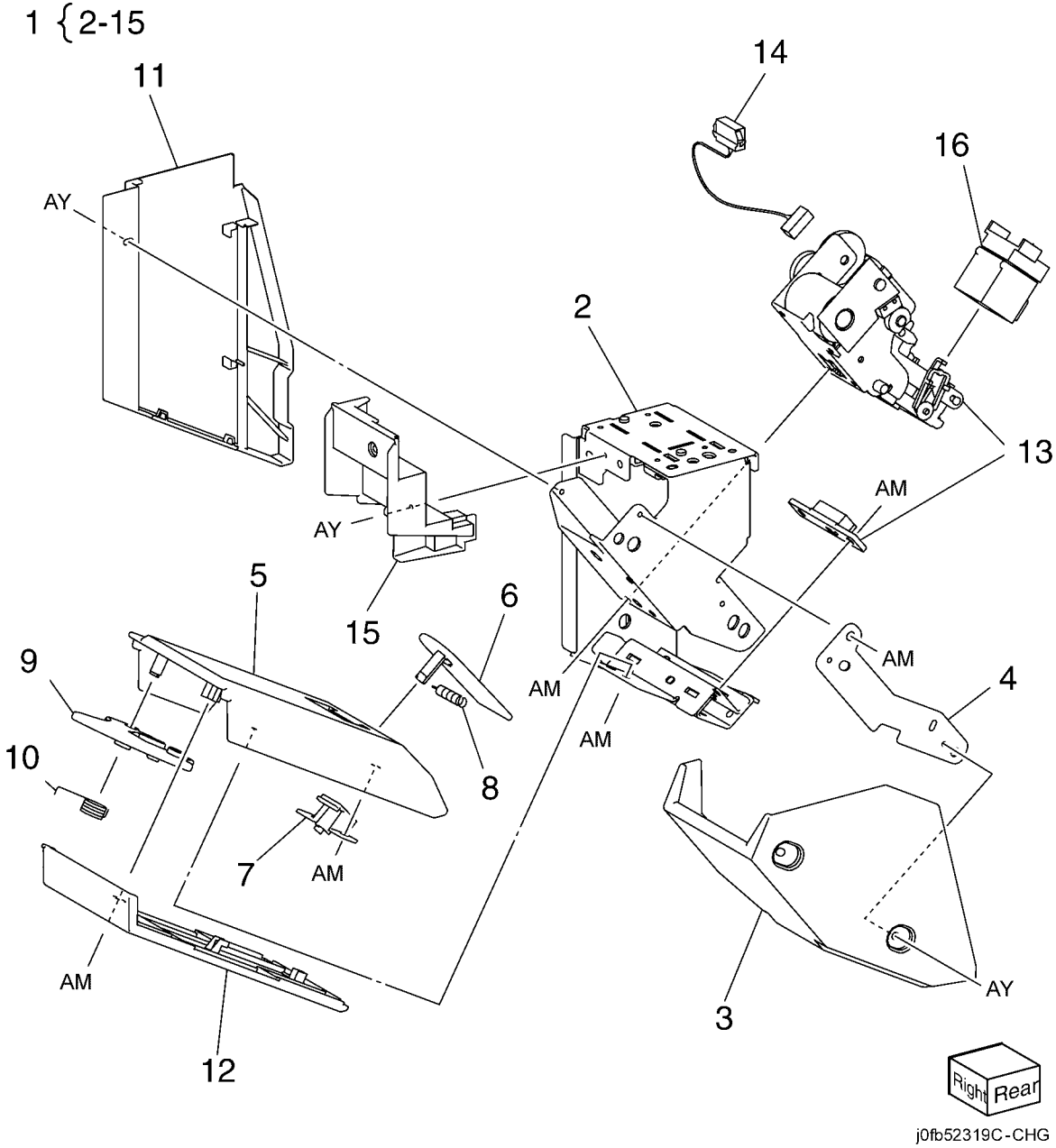

PL 23.20 Booklet Rear Stapler Assembly (Office Finisher LX)

Item	Part	Description
2	–	Bracket (P/O PL 23.20 Item 1)
3	–	Rear Cover (P/O PL 23.20 Item 1)
4	–	Bracket (P/O PL 23.20 Item 1)
6	–	Sub Chute (P/O PL 23.20 Item 1)
7	–	Support (P/O PL 23.20 Item 1)
8	–	Spring (P/O PL 23.20 Item 1)
9	–	Sub Chute (P/O PL 23.20 Item 1)
10	–	Spring (P/O PL 23.20 Item 1)
11	–	Front Cover (P/O PL 23.20 Item 1)
13	–	Booklet Stapler Assembly (P/O PL 23.20 Item 1) (REP 13.37, ADJ 12.2)
14	–	Wire Harness (P/O PL 23.20 Item 1)
15	–	Guide (P/O PL 23.20 Item 1)
16	–	Booklet Staple Cassette Assembly (P/O PL 23.20 Item 1)

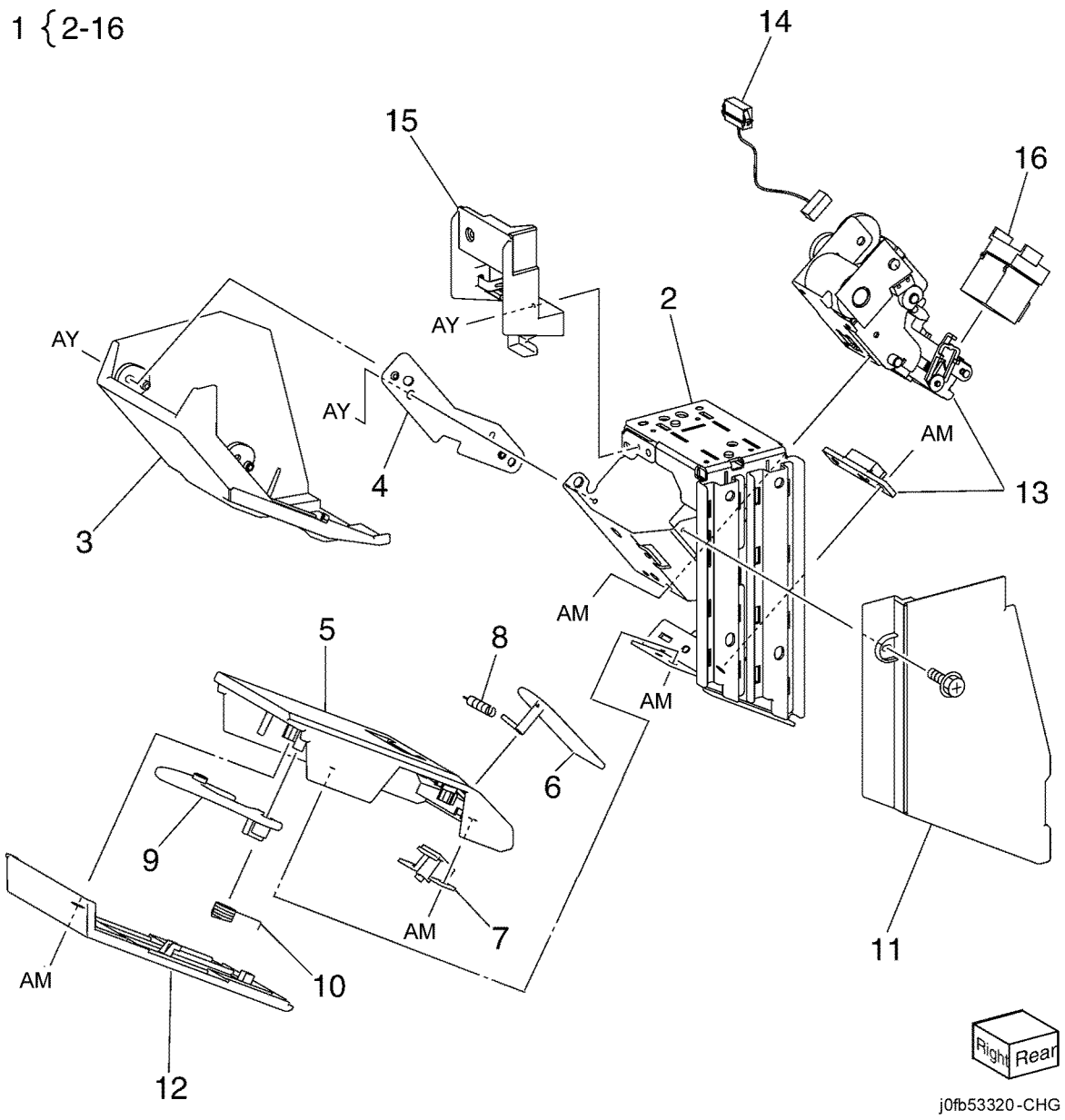

PL 23.21 Booklet Electrical (Office Finisher LX)

Item	Part	Description
3	–	Bracket (P/O PL 23.21 Item 1)
5	–	Wire Harness (Not Spared)
6	–	Wire Harness (Not Spared)
7	–	Wire Harness (Not Spared)
8	–	Booklet Stapler Cover Switch Assembly (Not Spared)
9	–	Bracket (P/O PL 23.21 Item 8)
10	–	Booklet Stapler Cover Switch (P/O PL 23.21 Item 8)
11	–	Plate (Not Spared)

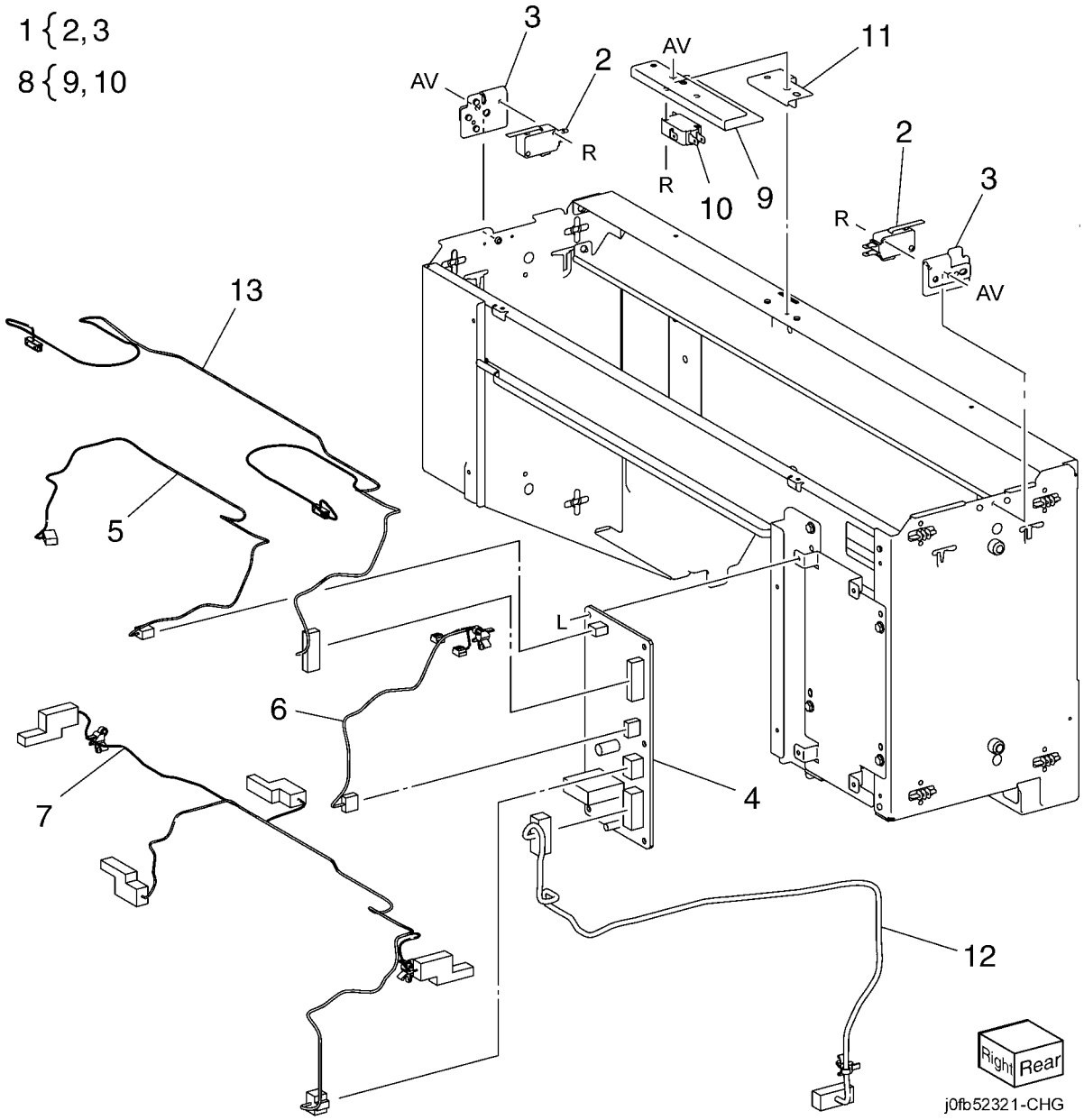

PL 35.1 ESS (1 of 3)

Item	Part	Description
1	–	SBC Cover (Not Spared)
2	–	SBC Hard Drive Chassis Assembly (Not Spared) (REP 3.1)

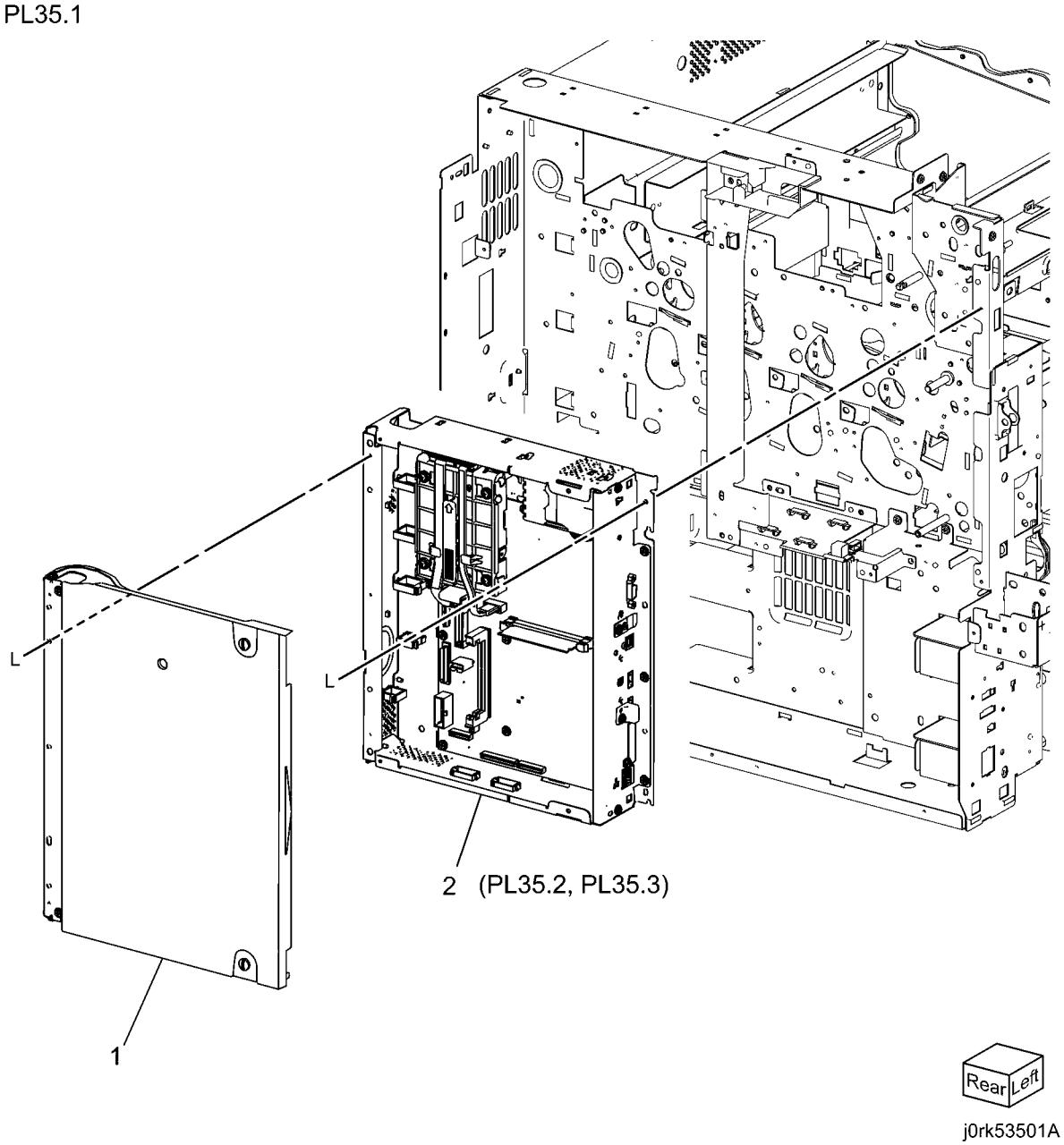

PL 35.2 ESS (2 of 3)

Item	Part	Description
1	960K65970	2 Line Fax
–	960K65960	1 Line Fax
2	–	SBC Housing (Not Spared)
3	962K40460	Data Cable
4	237E27090	SD Card
5	833W39041	Memory (2GB)
6	107K02810	Heat Sink Fan
7	207E22290	Battery
8	–	SBC Housing (Not Spared) (P/O PL 35.2 Item 6)
9	–	2.5 Inch SATA Hard Drive
10	–	Harness Assembly
11	962K41361	FDI Interface Cable
12	–	SD Card (Not Sparred)

NOTE: *javController.tif j0rk53502b.tif*

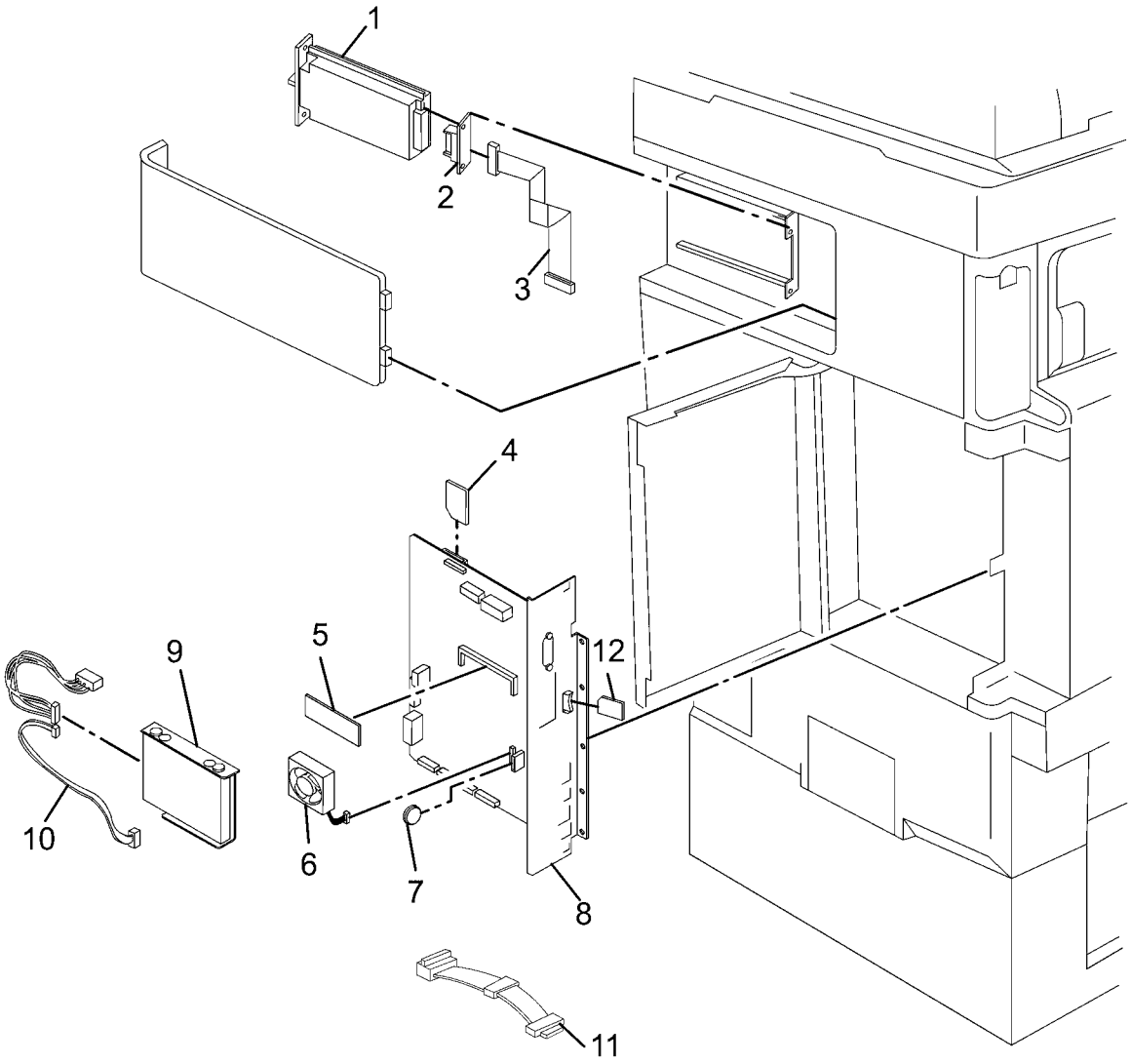

PL 35.3 SBC (3 of 3)

Item	Part	Description
1	–	SBC Plate (P/O PL 35.2 Item 1)
2	–	PWB Assembly (P/O PL 35.2 Item 1)
3	–	SBC PWB (P/O PL 35.3 Item 2)
4	–	EEPROM (P/O PL 35.3 Item 2)
5	–	USB Panel (P/O PL 35.2 Item 1)
6	–	Cable Guard (P/O PL 35.2 Item 1)
7	–	Plate (P/O PL 35.2 Item 1)

PL35.3

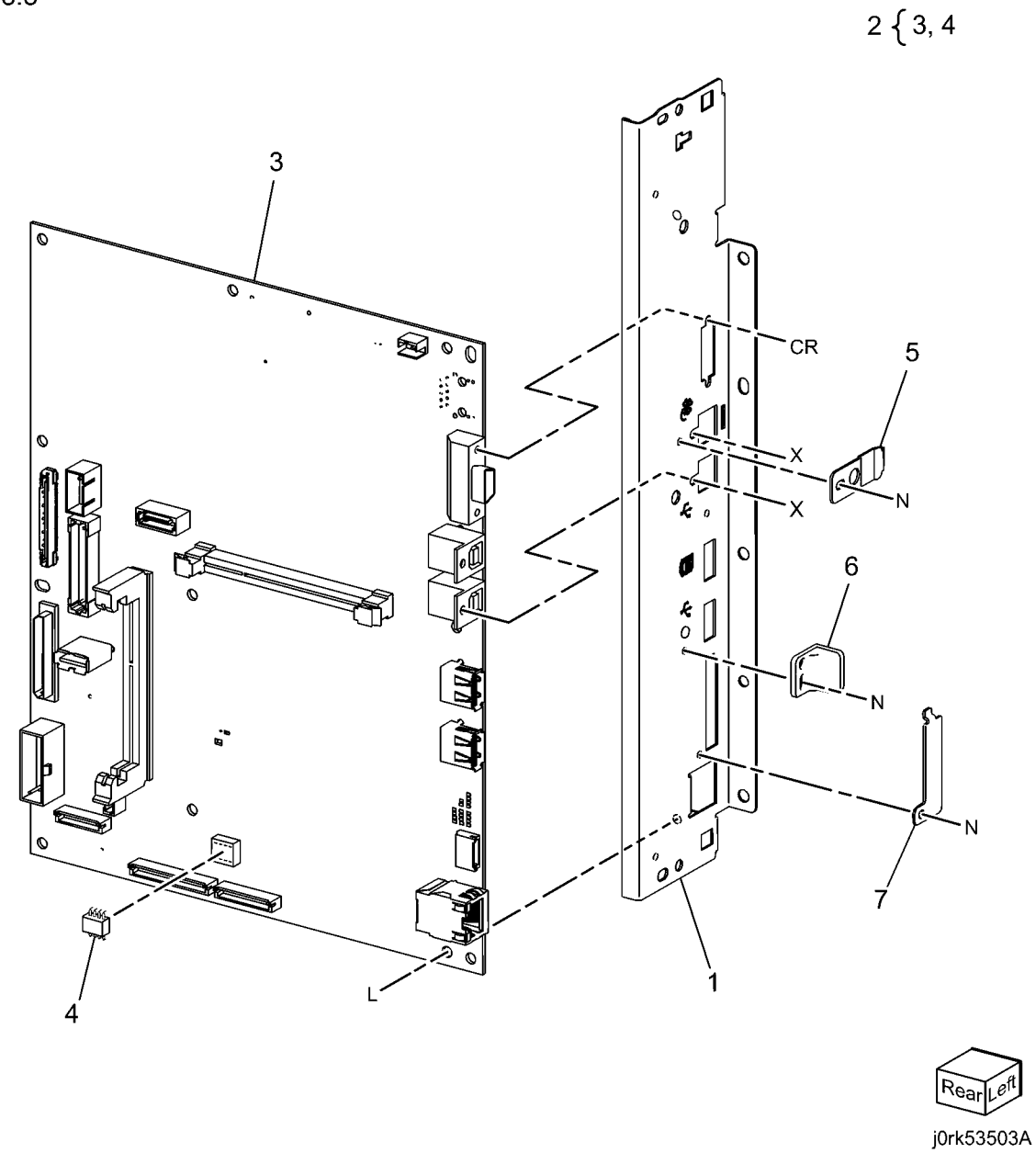

PL 51.1 DADF Accessory

Item	Part	Description
2	004K02962	DADF Platen Cushion (REP 5.2)
–	059K75072	DADF Assembly (REP 5.1)
3	–	Label

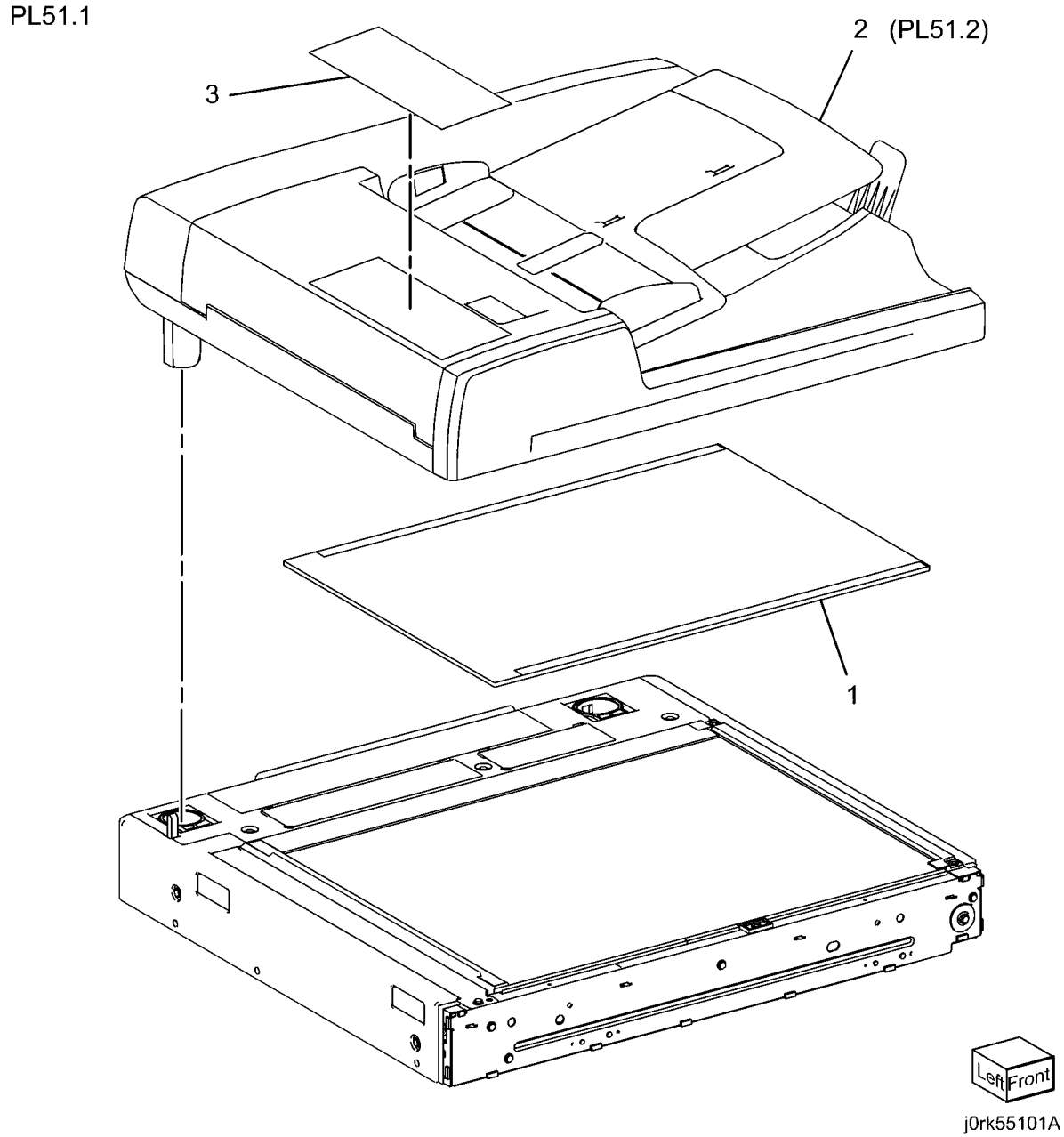

PL 51.2 Covers, PWB

Item	Part	Description
1	–	Base Frame (P/O PL 51.1 Item 2)
2	–	Feeder Assembly (P/O PL 51.1 Item 2) (REP 5.5)
3	–	Rear Cover (P/O PL 51.1 Item 2) (REP 5.4)
4	–	Front Cover (P/O PL 51.1 Item 2) (REP 5.3)
5	962K99570	DADF-IIT Transport Harness
6	960K61170	DADF PWB (REP 5.6)
7	–	Wire Harness (P/O PL 51.1 Item 2)
8	–	Data Plate (P/O PL 51.1 Item 2)
9	003K87990	Stopper
10	–	P Clamp (P/O PL 51.1 Item 2)
11	–	Bracket (P/O PL 51.1 Item 2)
12	–	Knob Label (Not Spared)

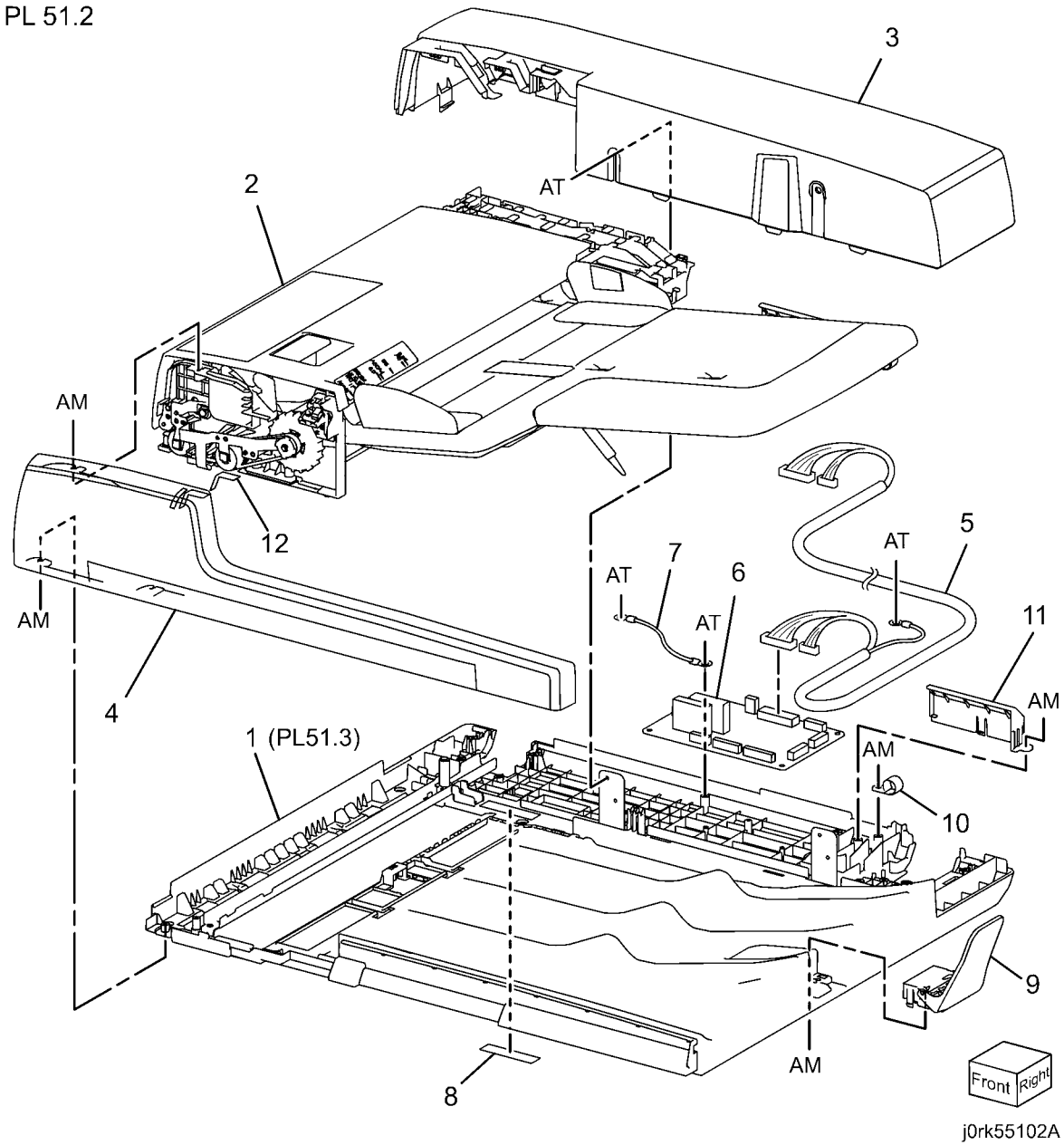

PL 51.3 Base Frame

Item	Part	Description
1	–	Frame (P/O PL 51.1 Item 2)
2	036K91873	Left Counter Balance (REP 5.7)
3	036K91921	Right Counter Balance (REP 5.8)
4	–	Tie Plate (P/O PL 51.1 Item 2)
5	054K41230	CVT Chute
6	–	Stud Screw (Not Spared)
7	–	Ground Plate (P/O PL 51.1 Item 2)
8	–	CVT Spring (Not Spared)
9	–	Floating Holder (Not Spared)
10	–	Floating Spring
11	–	Bracket (P/O PL 51.1 Item 2)

PL51.3

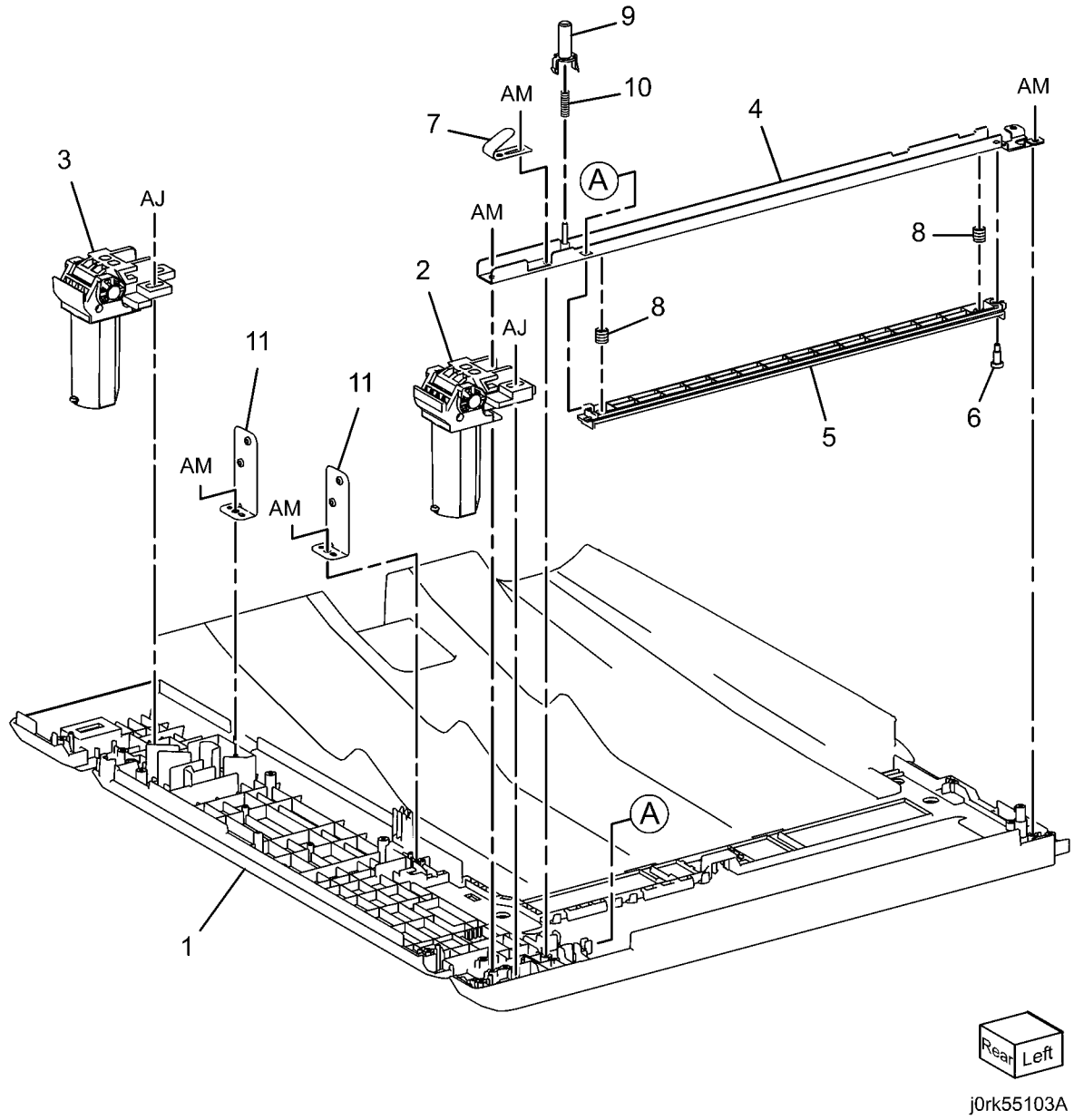

PL 51.4 Document Tray

Item	Part	Description
1	050K64252	Document Tray Assembly (REP 5.9)
2	059K65063	Top Cover (REP 5.10)
3	–	Stud Bracket (P/O PL 51.1 Item 2)

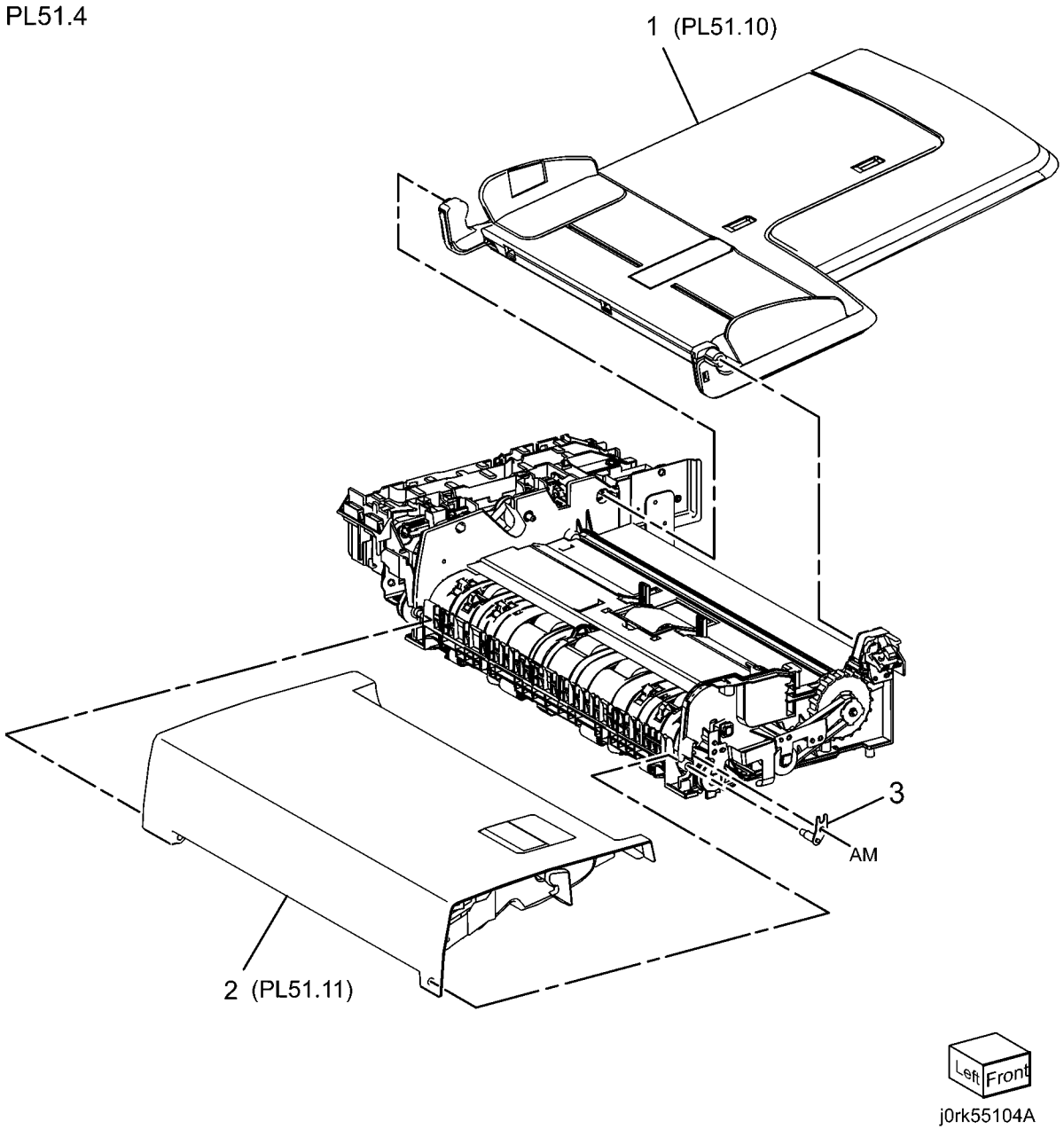

PL 51.5 DADF Drives (1 of 2)

Item	Part	Description
1	–	Harness Guide (Not Spared) (REP 5.11)
2	110K15933	Interlock Switch and Harness Assembly
3	–	Bracket (P/O PL 51.5 Item 2)
4	–	Interlock Switch (P/O PL 51.5 Item 2)
5	–	Spring (P/O PL 51.5 Item 2)
6	–	Switch Wire Harness (P/O PL 51.5 Item 2)
7	127K62910	Feed Motor (REP 5.13)
8	127K62890	Registration Motor (REP 5.12)
9	–	Spring (Not Spared)
10	–	Spring (Not Spared)
11	–	Bracket (P/O PL 51.1 Item 2)
12	–	Bracket (P/O PL 51.1 Item 2)
13	–	Feeder Wire Harness (P/O PL 51.1 Item 2)
14	–	Motor Wire Harness (P/O PL 51.1 Item 2)
15	–	APS Wire Harness
16	–	Connector (Not Spared)
17	–	Connector (Not Spared)

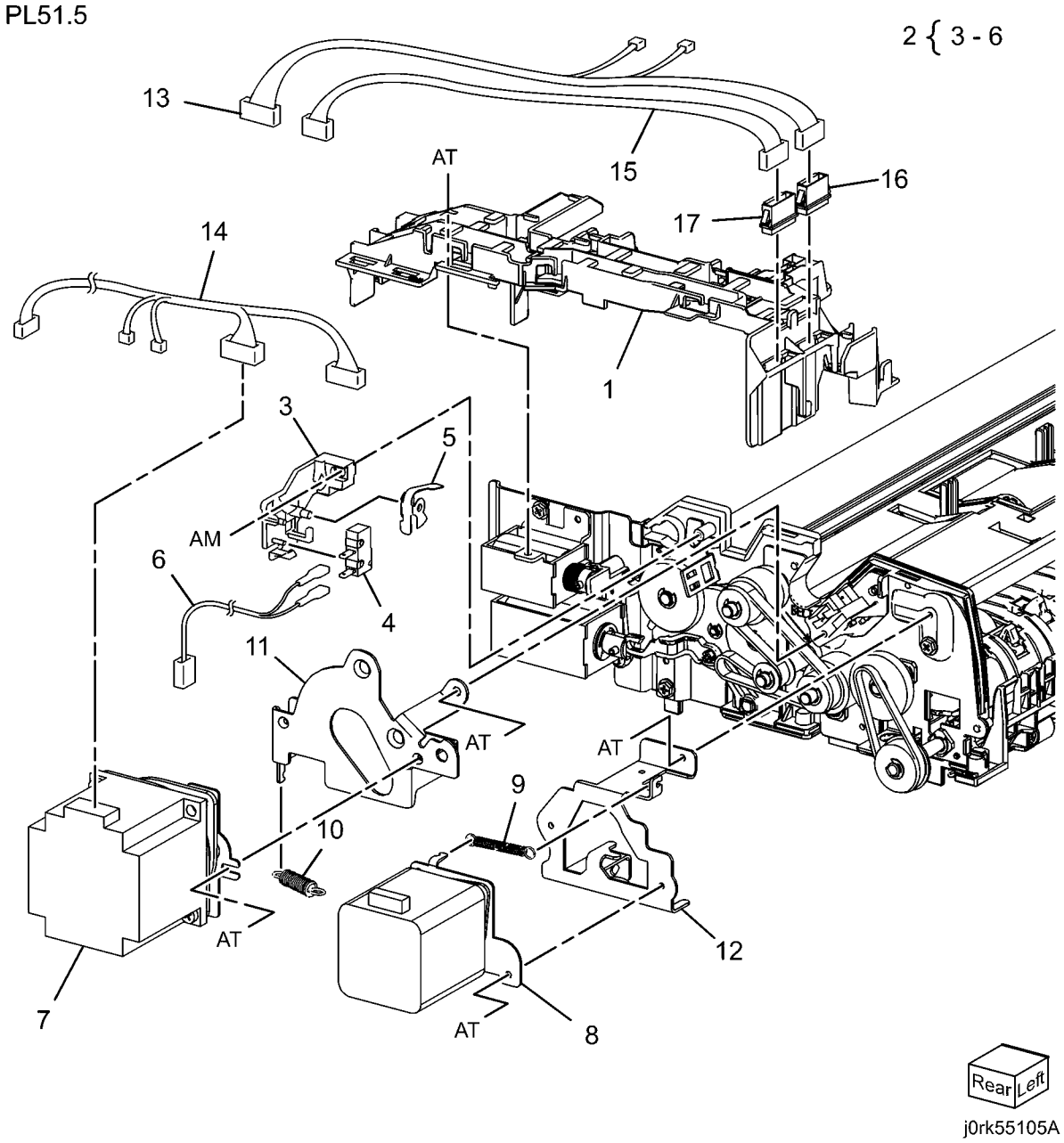

PL 51.6 DADF Drives (2 of 2)

Item	Part	Description
1	011E22861	Nip Lever
2	–	Stopper Link (Not Spared)
3	012E17161	Release Link
4	019K10320	Brake
5	020E46551	Registration Roll Pulley
6	020E46561	Pulley Gear
7	020E46571	Pulley Gear
8	059E98620	Roll
9	121K46620	Gate Solenoid
10	–	Gate Solenoid (P/O PL 51.6 Item 9)
11	–	Cushion (P/O PL 51.6 Item 9)
12	121K43660	Exit Nip Release Solenoid
13	130K73000	Feed Out Sensor Assembly
14	–	Sensor Bracket (P/O PL 51.6 Item 13)
15	930W00121	Feed Out Sensor, Document Set Sensor
16	423W06555	Belt
17	423W31354	Belt
18	807E26971	Gear
19	807E26981	Exit Roll Gear
20	807E26991	Gear
21	807E27011	Take Away Roll Gear
22	809E86320	Spring

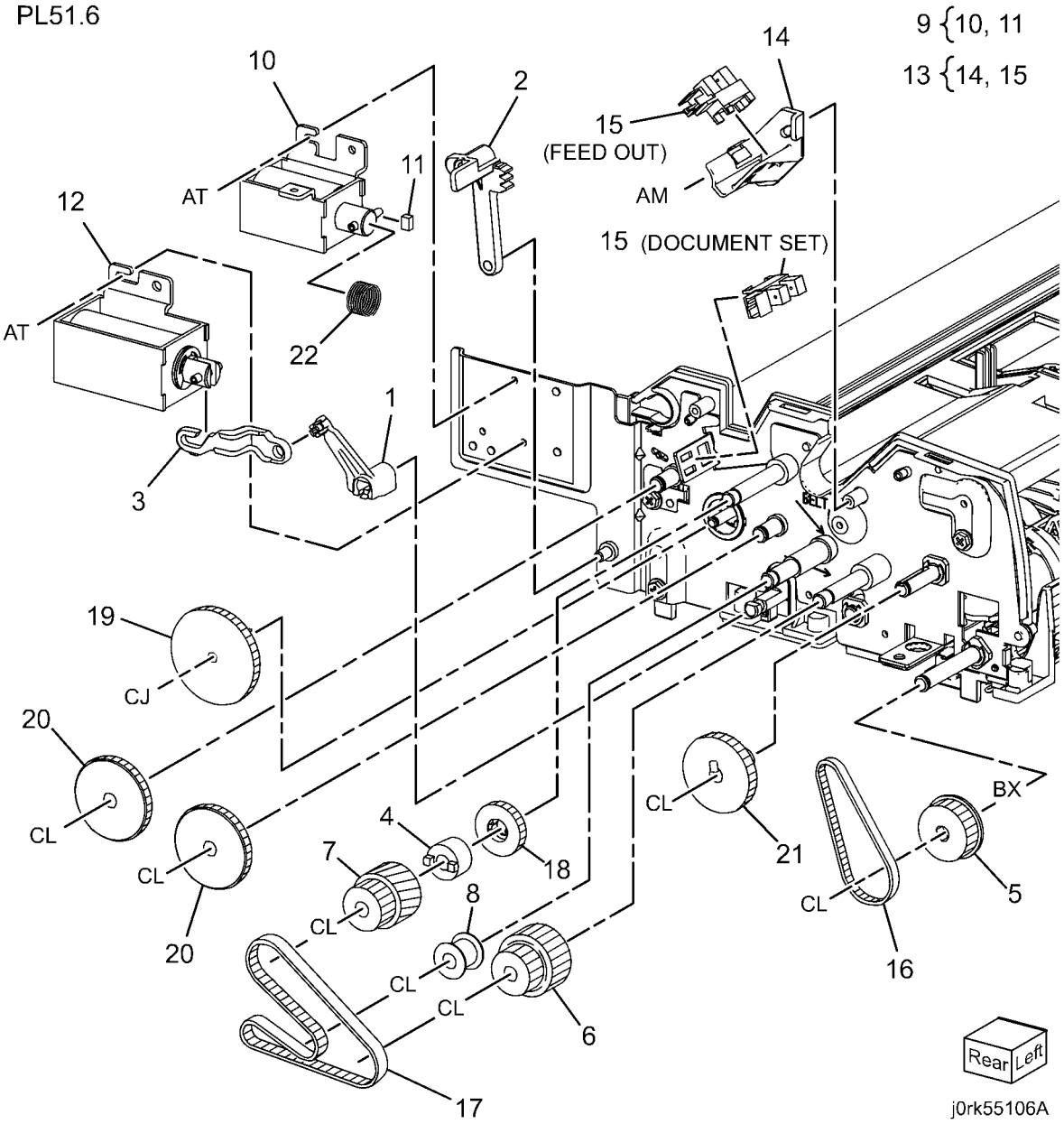

PL 51.7 Front Belt

Item	Part	Description
1	020E46540	Out Roll Pulley
2	020E46551	Registration Roll Pulley
3	423W08855	Belt
4	–	Belt (Not Spared)
5	803E02200	Knob Handle
6	–	Ground Plate (Not Spared)
7	960K48840	Document LED Set
8	–	LED Bracket (P/O PL 51.7 Item 7)
9	–	Document LED (P/O PL 51.7 Item 7)

PL51.7

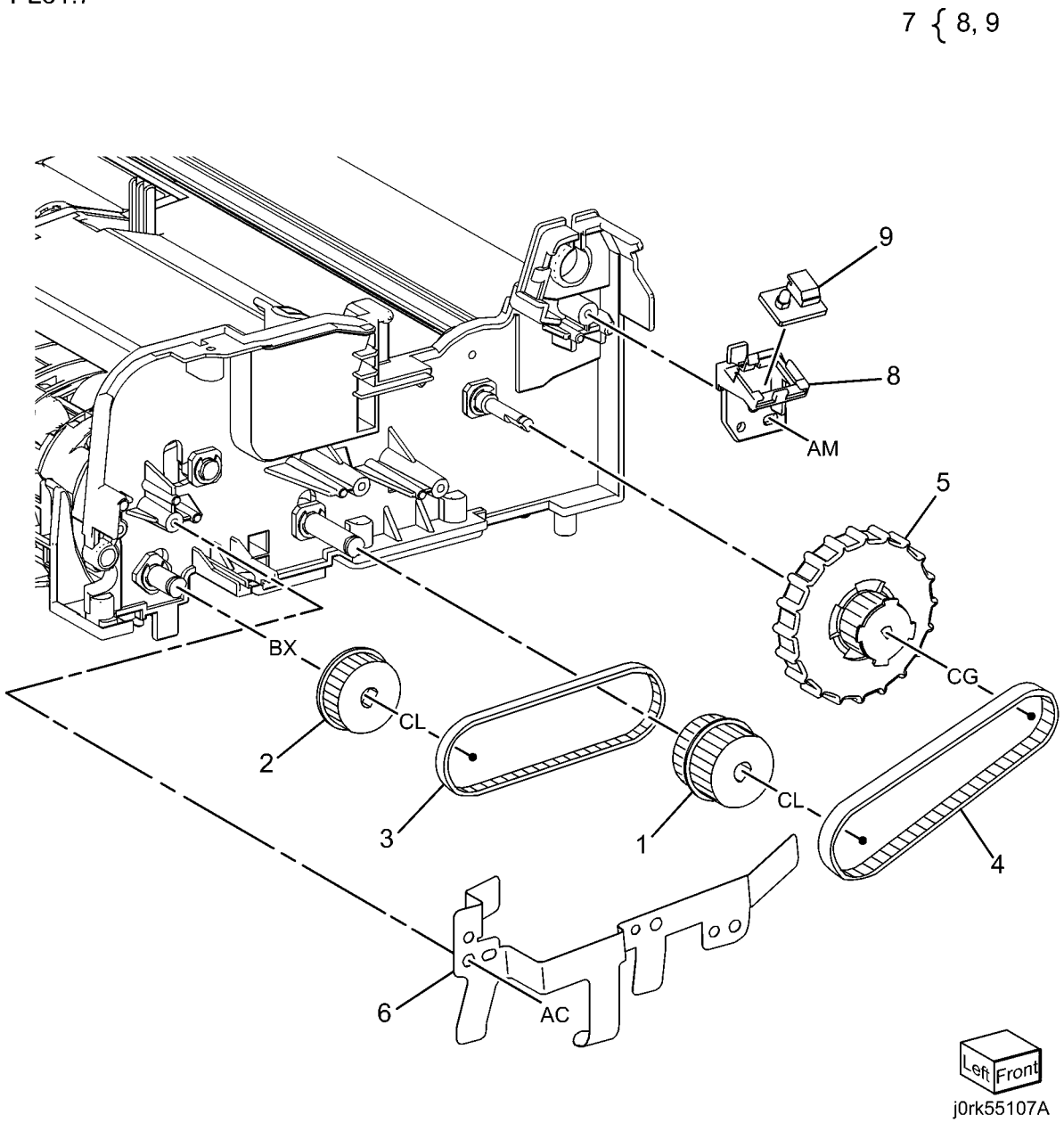

PL 51.8 Registration, Retard, Invert, Output Chutes

Item	Part	Description
1	054K39700	Registration Chute (REP 5.14)
2	054K44171	Retard Chute (REP 5.15)
3	054K41044	Invert Chute (REP 5.15)
4	054K43880	Output Chute
5	–	Stamp Solenoid (Not Spared)

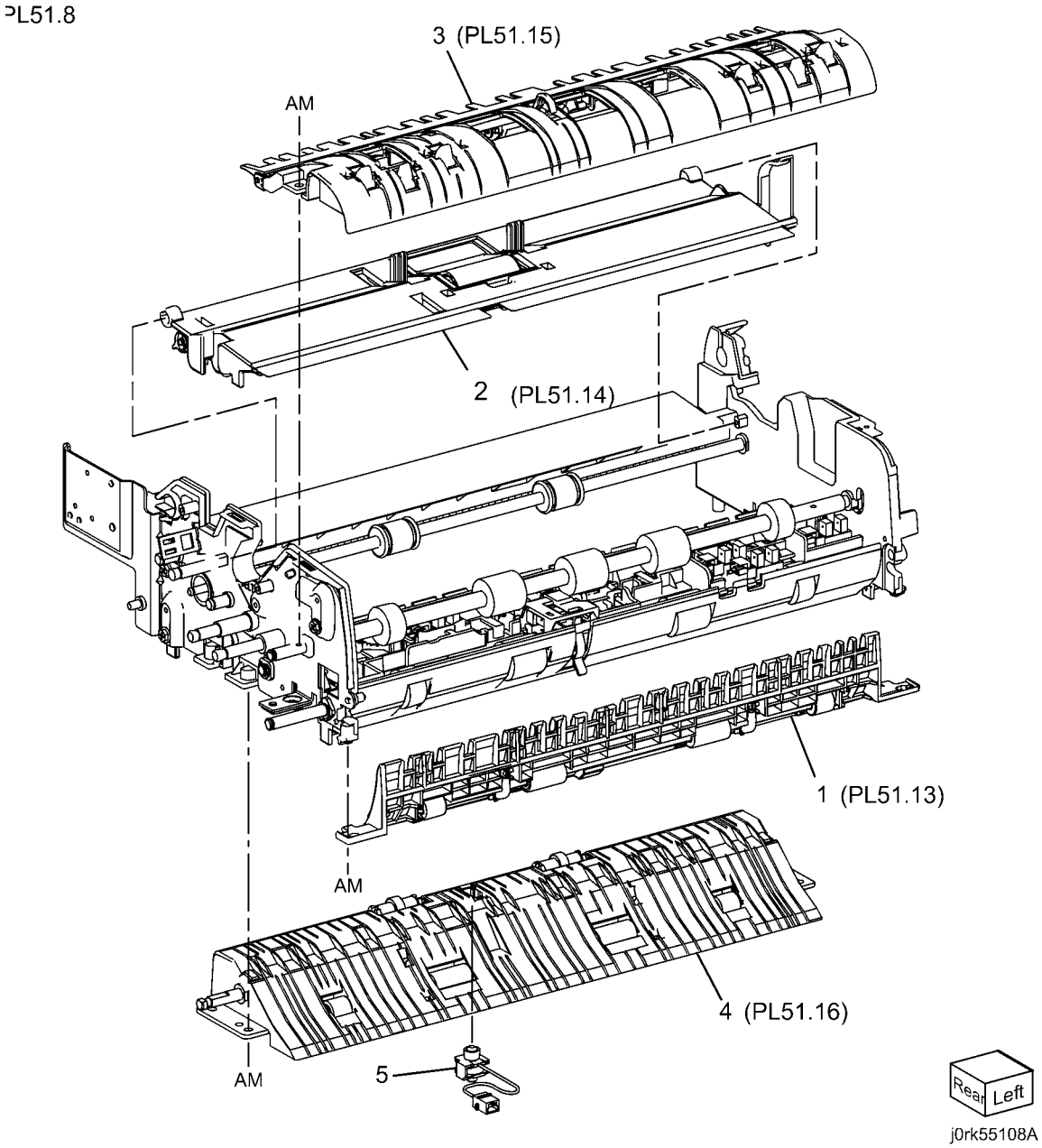

PL 51.9 Roll, Sensor Bracket

Item	Part	Description
1	–	Bearing (Not Spared)
2	059K65081	Registration Roll
3	–	Take Away Roll (Not Spared) (REP 5.16)
4	–	Output Roll (Not Spared)
5	–	Exit Roll (Not Spared)
6	068K69460	Sensor Bracket Assembly (REP 5.17)
7	–	Bearing (Not Spared)
8	930W00121	Invert Sensor

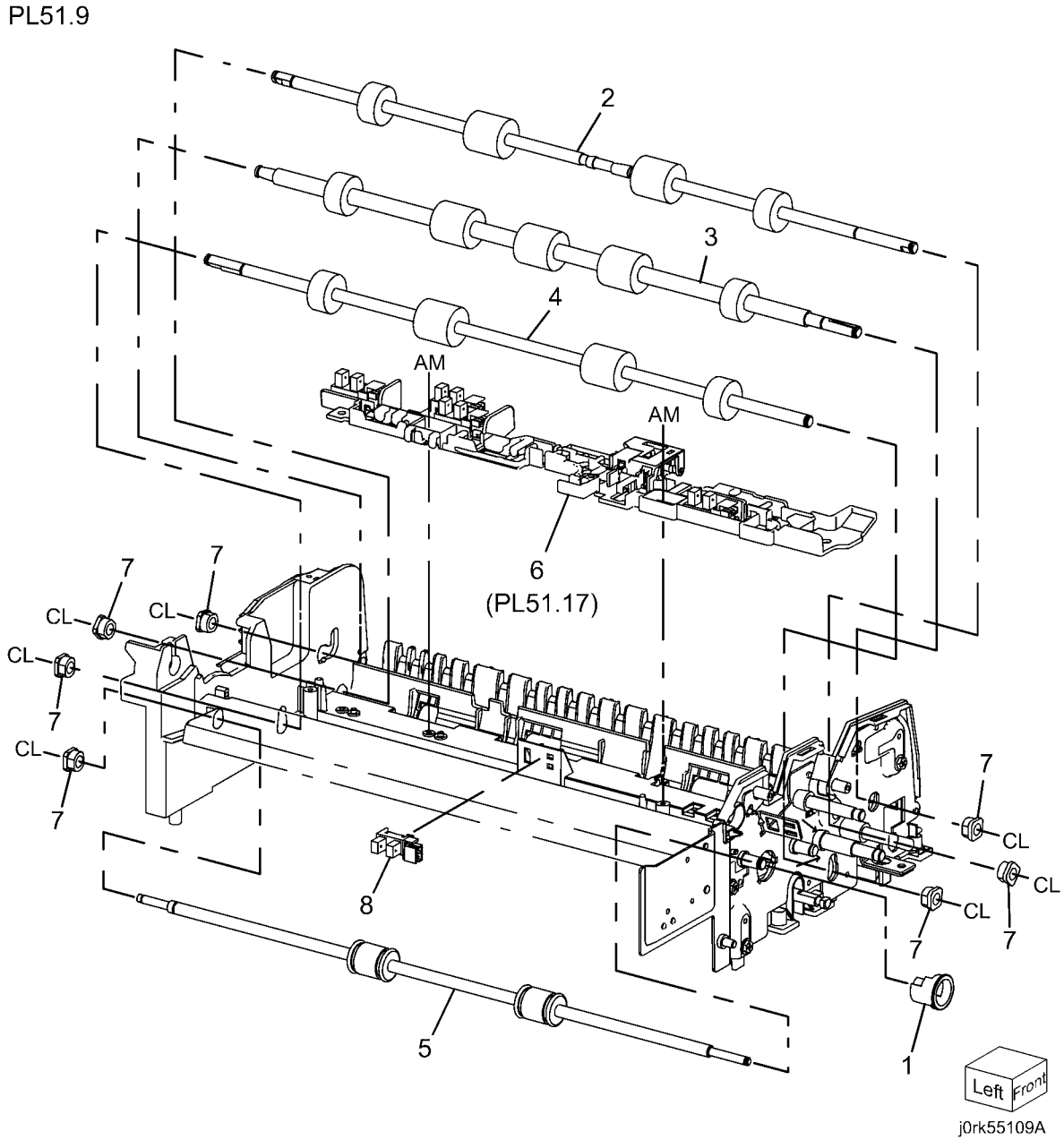

PL 51.10 Document Tray

Item	Part	Description
1	–	Sensor Bracket (P/O PL 51.4 Item 1)
2	930W00121	Tray Guide Set Sensor 1, Sensor 2, Sensor 3
3	–	Tray Cover (P/O PL 15.4 Item 1)
4	–	Tray Wire Harness (P/O PL 51.4 Item 1)
5	032K05861	Guide
6	–	Max Label (Not Spared)
7	–	Harness Cover (P/O PL 51.4 Item 1)
8	–	Harness Cover (P/O PL 51.4 Item 1)
9	–	Front Gear Rack (P/O PL 51.4 Item 1)
10	–	Rear Gear Rack (P/O PL 51.4 Item 1)
11	930W00241	Size Sensor 1, Size Sensor 2
12	–	Instruction Label (Not Spared)
13	–	Rack Spring (P/O PL 51.4 Item 1)
14	–	Pinion Gear (P/O PL 51.4 Item 1)
15	–	Side Guide (P/O PL 51.4 Item 1)
16	–	Side Guide (P/O PL 51.4 Item 1)
17	–	Upper Tray (P/O PL 15.4 Item 1)

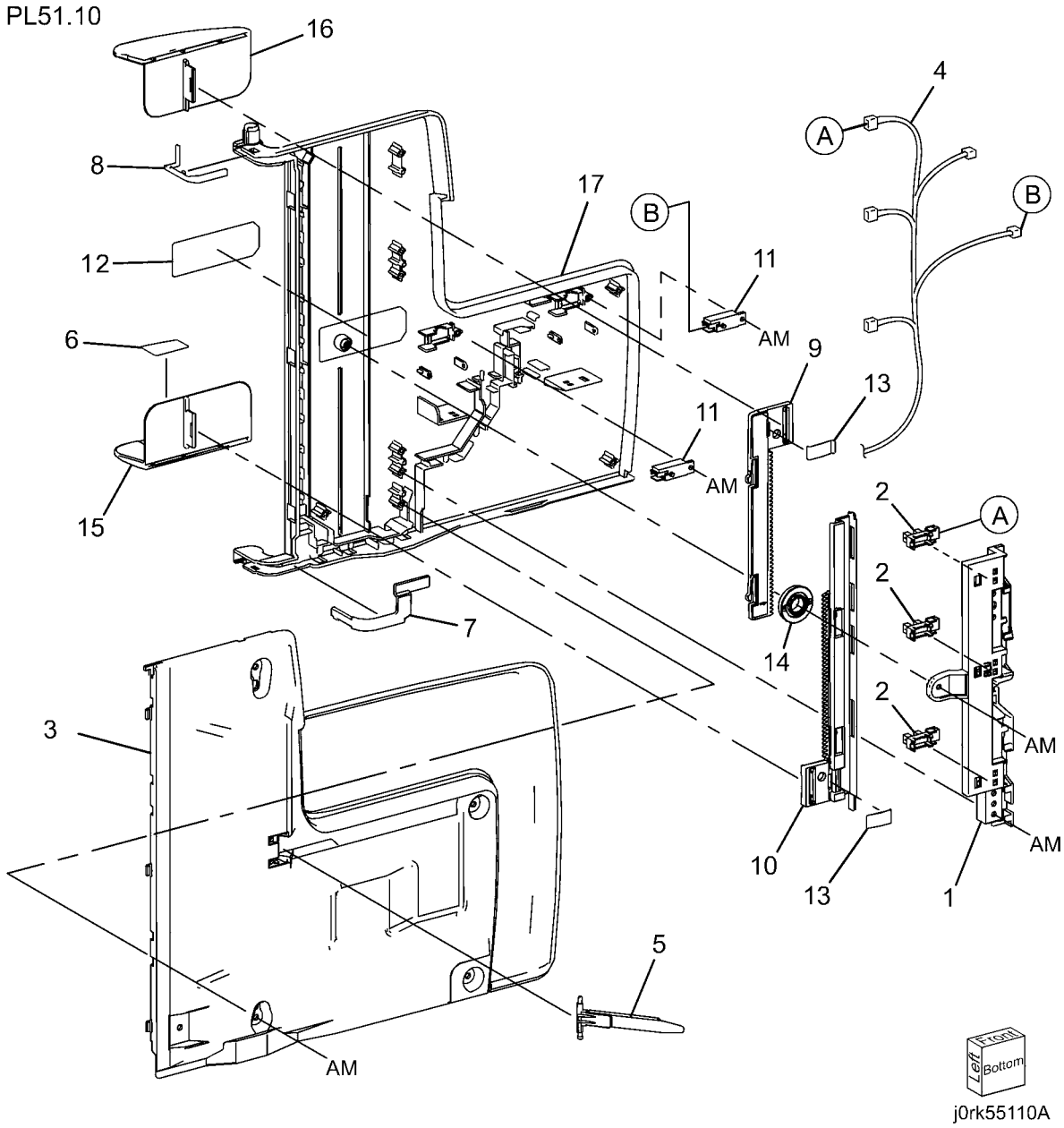

PL 51.11 Top Cover

Item	Part	Description
1	–	Top Cover (P/O PL 51.4 Item 2)
2	–	Upper Feed Chute (P/O PL 51.4 Item 2)
3	059K65070	Upper Feeder (REP 5.5)
4	011K03520	Lever Latch
5	059K61230	Take Away Pinch Roll
6	120K92500	Document Set Actuator
7	120E32200	Feed Out Actuator
8	–	Bracket (P/O PL 51.4 Item 2)
9	–	Ground Plate (P/O PL 51.4 Item 2)
10	–	Size Label
11	–	Jam Label
12	–	Spring (Not Spared)
13	–	Spring (Not Spared)
14	–	Spring (Not Spared)

PL51.11

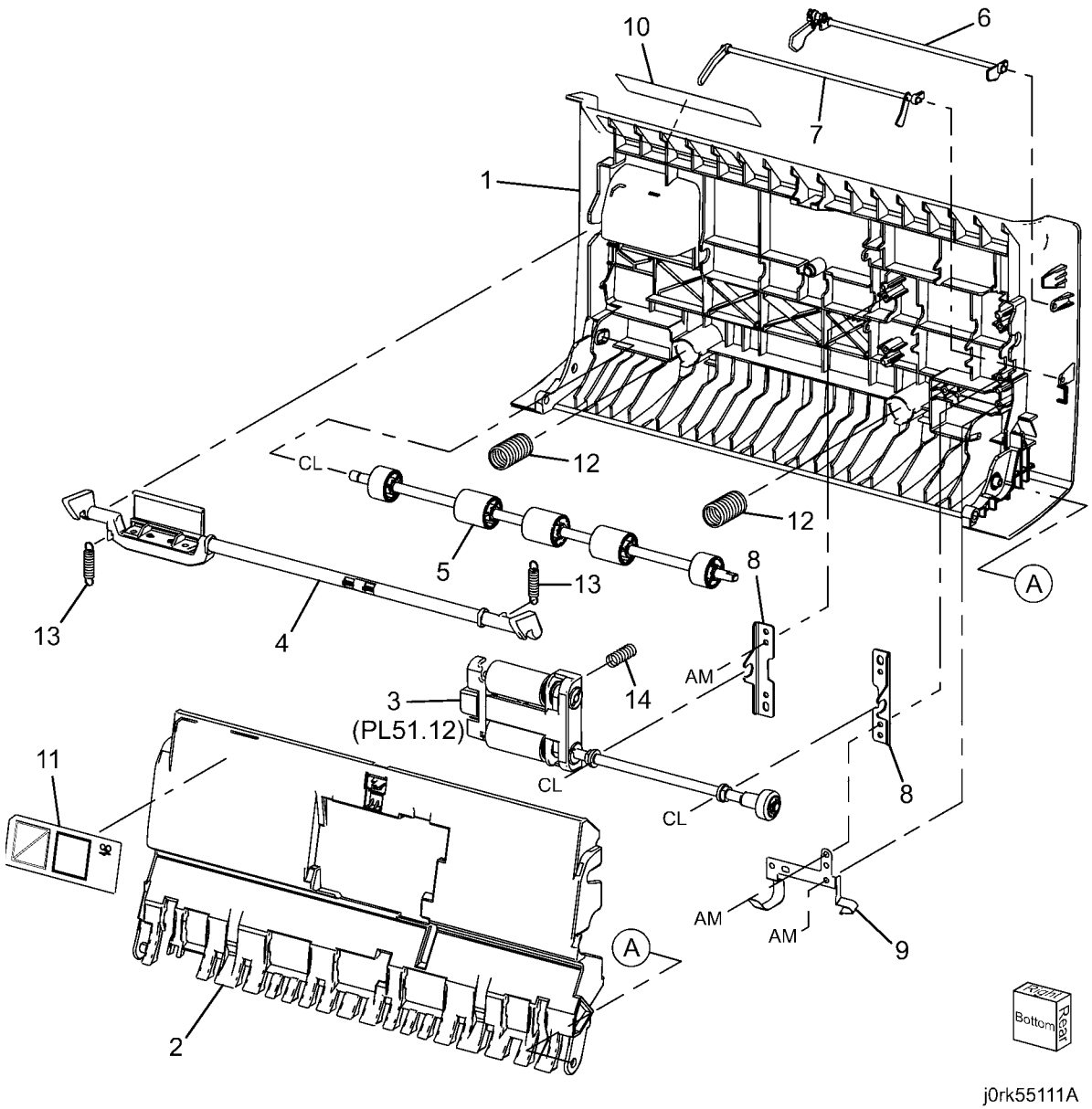

PL 51.12 Upper Feeder

Item	Part	Description
1	–	Housing (P/O PL 51.11 Item 3)
2	–	Feeder Pulley (P/O PL 51.12 Item 3)
3	–	Nudger Pulley (P/O PL 51.11 Item 3)
4	–	Belt (P/O PL 51.11 Item 3)
5	–	Feed Shaft (P/O PL 51.11 Item 3)
6	–	Nudger Shaft (P/O PL 51.11 Item 3)
7	–	Feed Roll, Nudger Roll (P/O PL 51.12 Item 11) (REP 5.18)
8	–	Bearing (P/O PL 51.11 Item 3)
9	–	Housing (P/O PL 51.12 Item 11)
10	–	Gear (P/O PL 51.11 Item 3)
11	604K58410	DADF Feed Roll Kit

PL51.12

11 { 7, 9, PL51.14 Items 5, 10

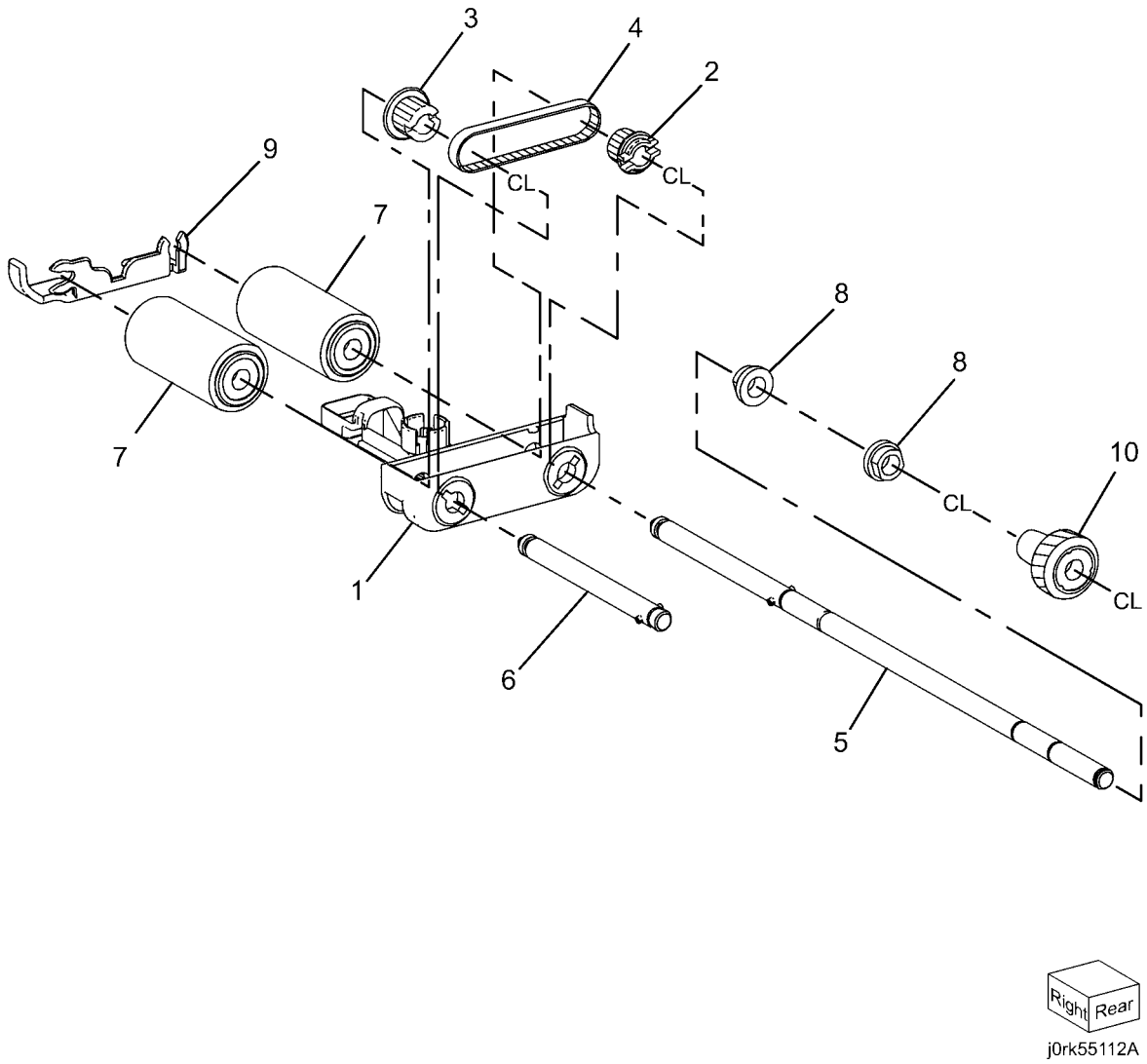

PL 51.13 Registration Chute

Item	Part	Description
1	–	Registration Chute (P/O PL 51.8 Item 1)
2	–	Pinch Shaft (P/O PL 51.8 Item 1)
3	–	Registration Wide Pinch Roll (P/O PL 51.8 Item 1)
4	–	Registration Short Pinch Roll (P/O PL 51.8 Item 1)
5	–	Seal (P/O PL 51.8 Item 1)
6	–	Seal (P/O PL 51.8 Item 1)
7	–	Spring (P/O PL 51.8 Item 1)

PL51.13

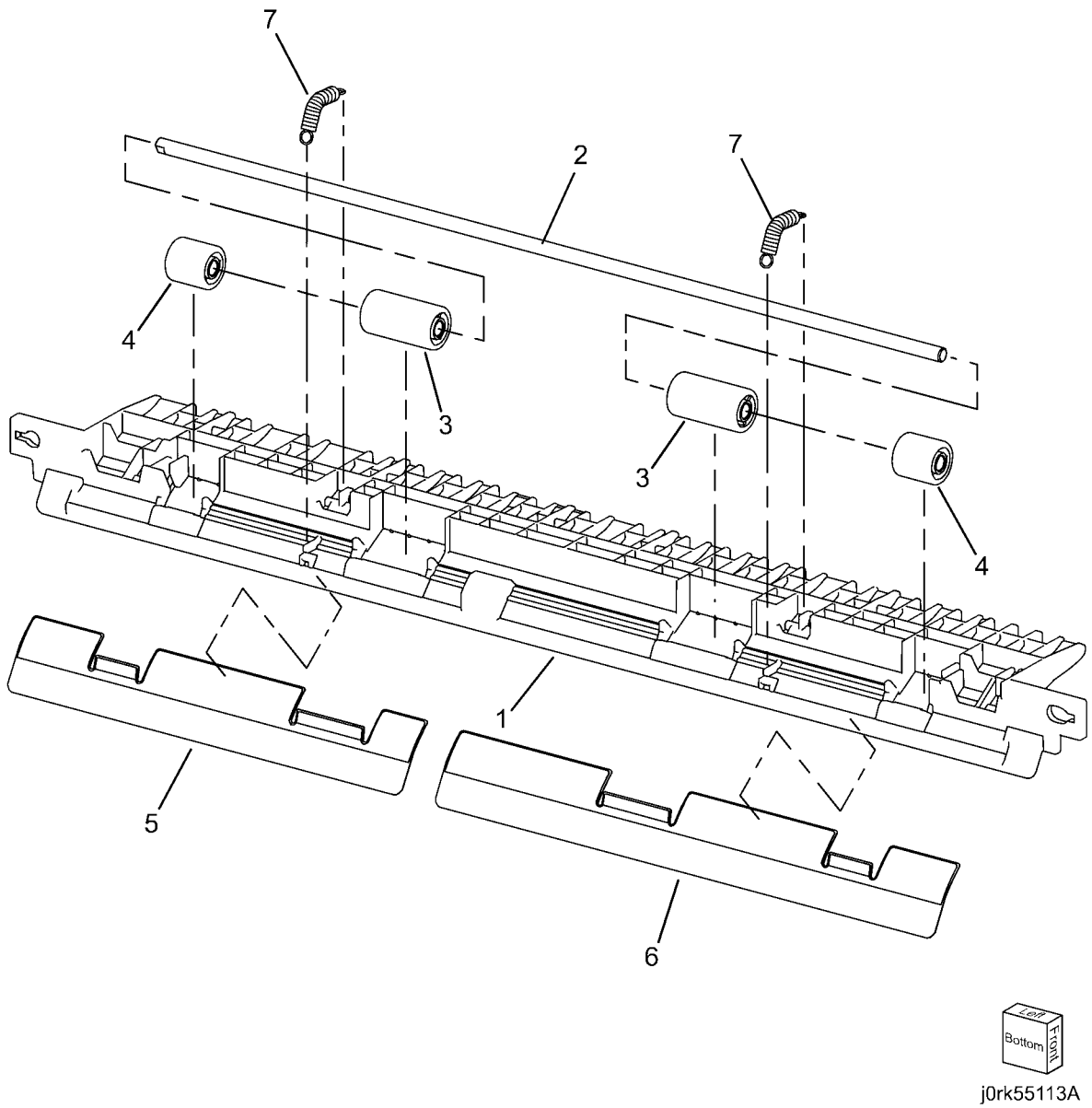

PL 51.14 Retard Chute

Item	Part	Description
1	–	Chute (P/O PL 51.8 Item 2)
2	–	Set Gate (P/O PL 51.8 Item 2)
3	–	Housing (P/O PL 51.8 Item 2)
4	–	Spring (P/O PL 51.8 Item 2)
5	059K61280	Retard Roll (P/O PL 51.8 Item 2) (REP 5.19)
6	848K43600	Retard Roll Cover (P/O PL 51.12 Item 11)
7	–	Seal (P/O PL 51.8 Item 2)
8	–	Seal (P/O PL 51.8 Item 2)
9	–	Label (P/O PL 51.8 Item 2)
10	–	Shaft (P/O PL 51.12 Item 11)
11	–	Pad (P/O PL 51.8 Item 2)

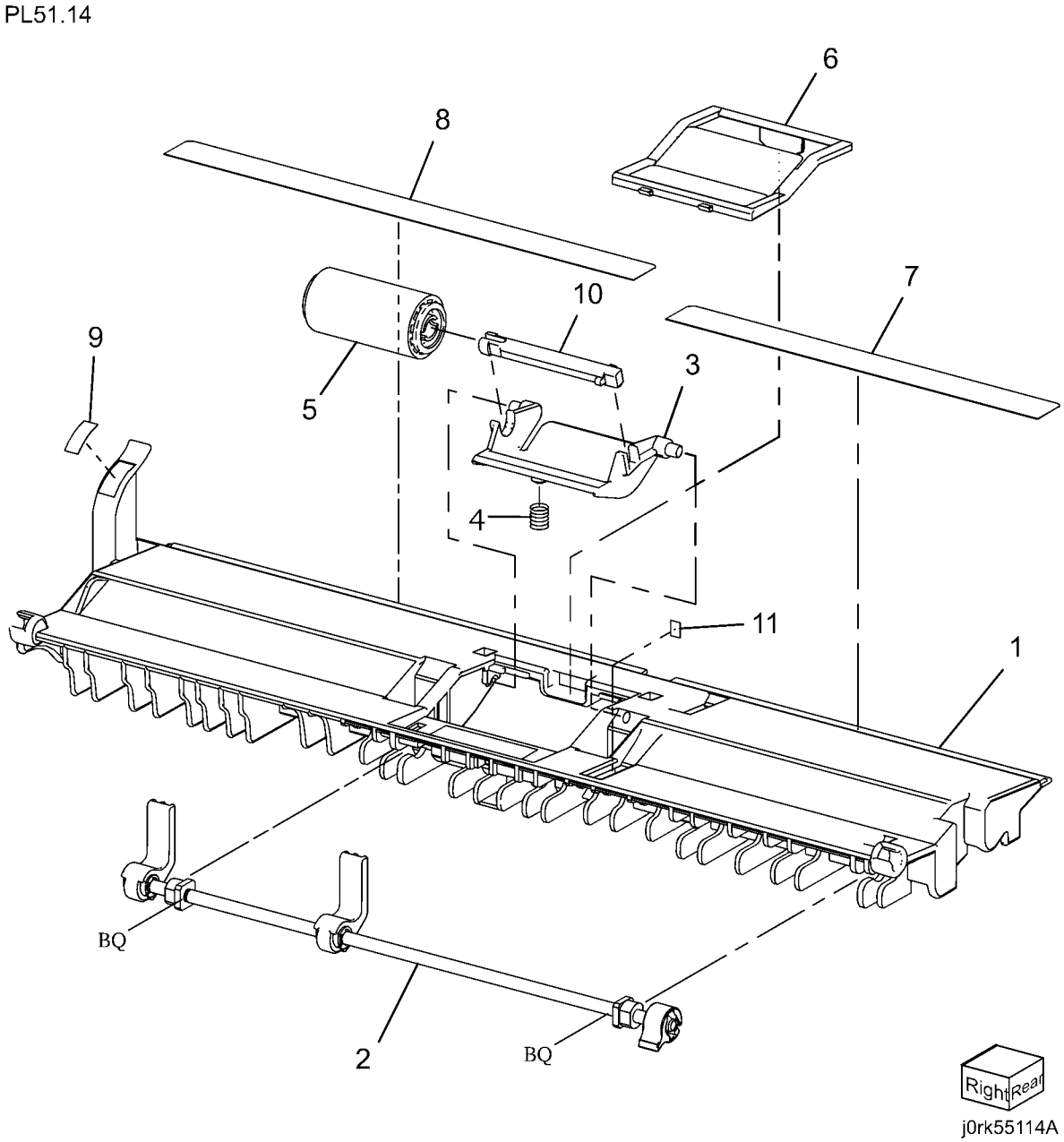

PL 51.15 Invert Chute

Item	Part	Description
1	–	Invert Chute (P/O PL 51.8 Item 3)
2	–	Pre Registration Actuator (P/O PL 51.8 Item 3)
3	–	Actuator (Aps 1) (P/O PL 51.8 Item 3)
4	–	Actuator (Aps 2) (P/O PL 51.8 Item 3)
5	–	Actuator (Aps 2) (P/O PL 51.8 Item 3)
6	–	Actuator (Aps 3) (P/O PL 51.8 Item 3)
7	–	Invert Actuator (P/O PL 51.8 Item 3)
8	–	Invert Gate (P/O PL 51.8 Item 3)
9	–	Spring (P/O PL 51.8 Item 3)
10	–	Spring (P/O PL 51.8 Item 3)
11	–	Seal (P/O PL 51.8 Item 3)
12	–	Seal (P/O PL 51.8 Item 3)
13	–	Pad (P/O PL 51.8 Item 3)

PL 51.15

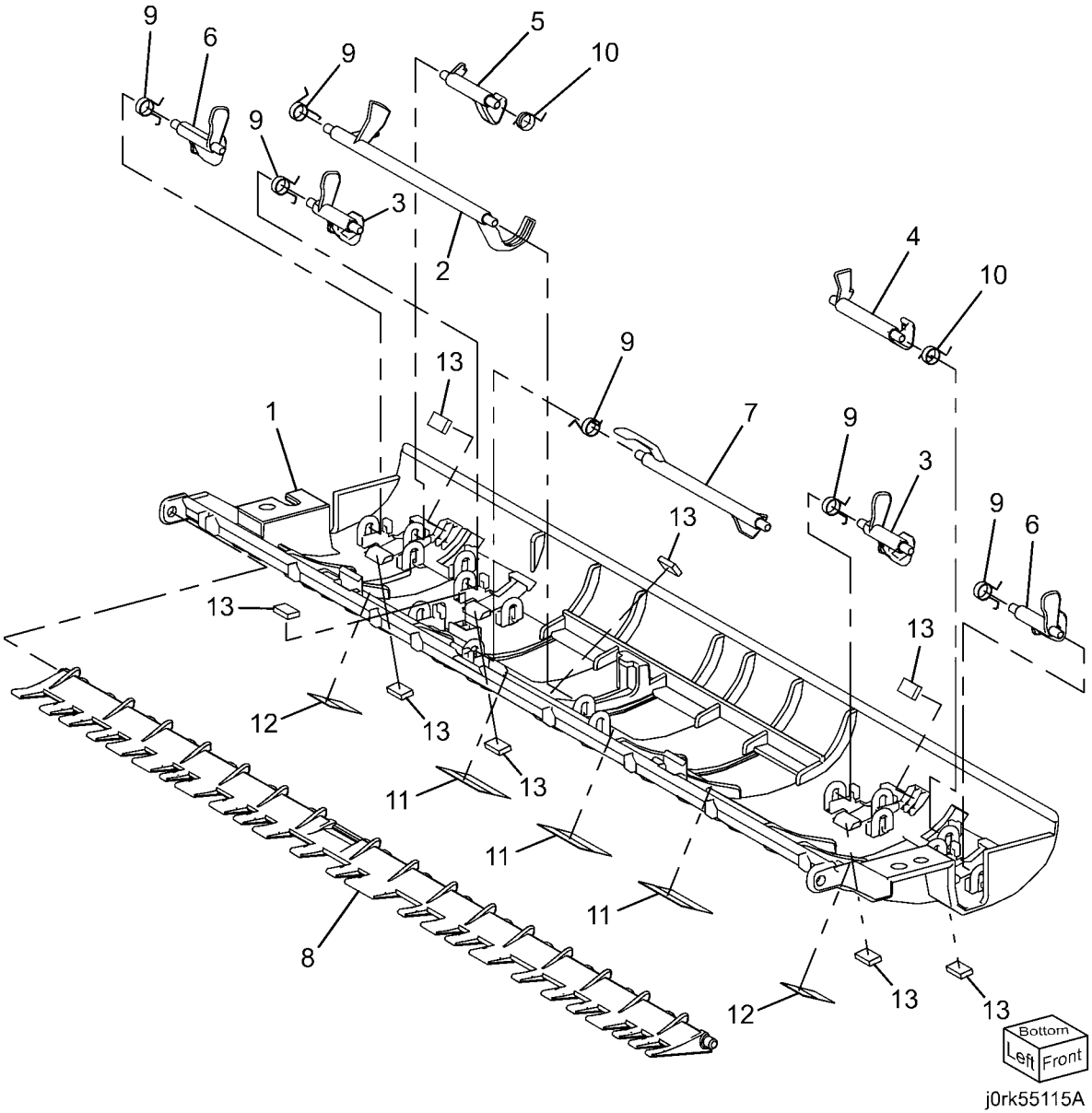

PL 51.16 Output Chute

Item	Part	Description
1	–	Chute (P/O PL 51.8 Item 4)
2	–	Exit Pinch Roll (P/O PL 51.8 Item 4)
3	–	Pinch Shaft (P/O PL 51.8 Item 4)
4	–	Wide Registration Pinch Roll (P/O PL 51.8 Item 4)
5	–	Short Registration Pinch Roll (P/O PL 51.8 Item 4)
6	–	Spring (P/O PL 51.8 Item 4)
7	–	Spring (P/O PL 51.8 Item 4)
8	–	Bearing (P/O PL 51.8 Item 4)
9	–	Pad (P/O PL 51.8 Item 4)

PL51.16

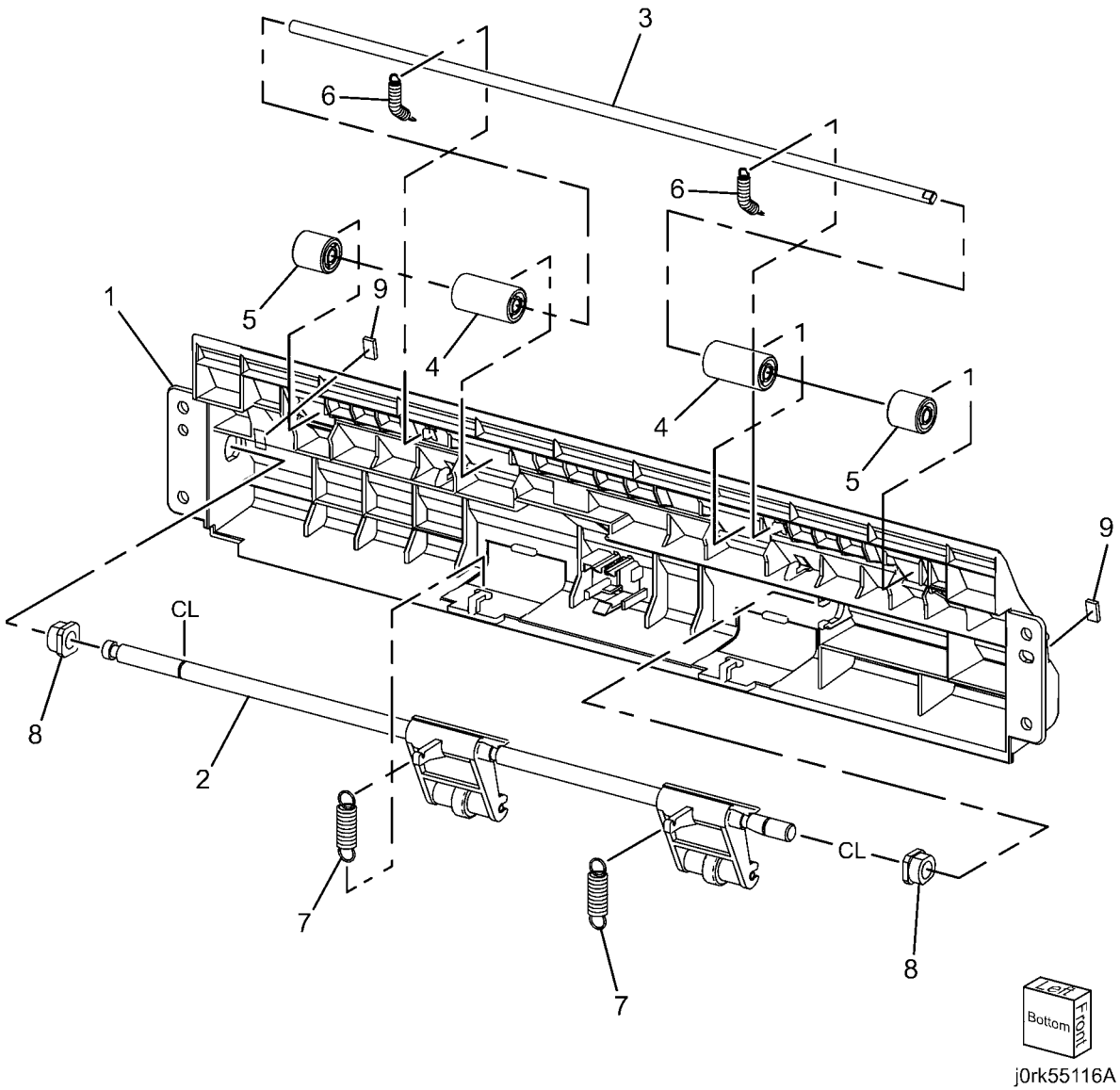

PL 51.17 Sensor Bracket

Item	Part	Description
1	–	Sensor Housing (P/O PL 51.9 Item 6)
2	120E31741	Registration Actuator
3	–	Spring (P/O PL 51.4 Item 1)
4	–	Sensor Guide (P/O PL 51.4 Item 1)
5	–	Wire Harness (Not Spared)
6	930W00121	APS Sensor 1, APS Sensor 2, APS Sensor 3, Registration Sensor, Pre Registration Sensor

PL51.17

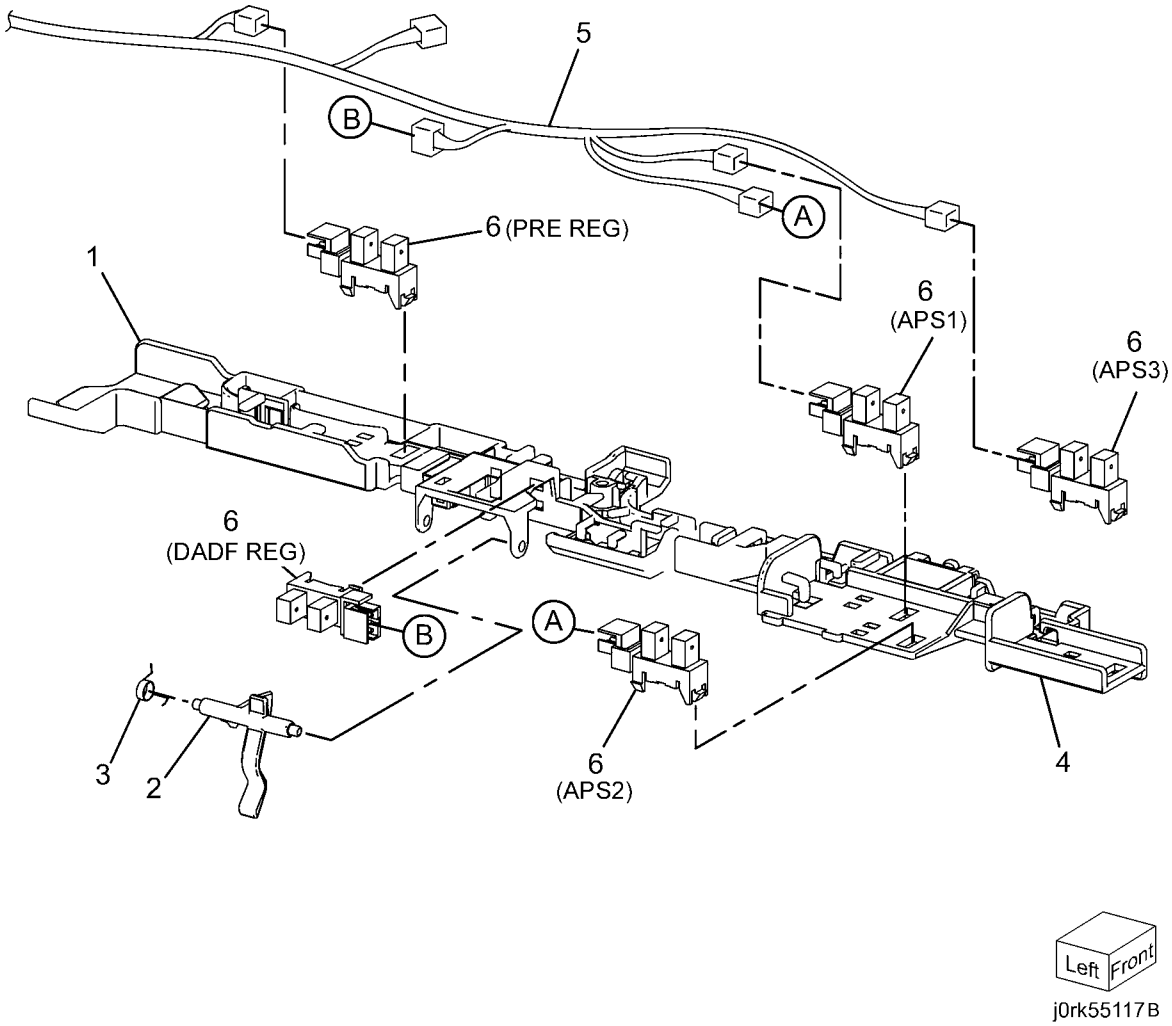

Part Number Index

The Part Number Index Table has been deleted from the EDOC.

Use SearchLite to search for Part Numbers and Part Descriptions.

6 General Procedures

Tools Diagnostics

UI Diagnostic (CSE) Mode 6-3
Service Copy (Tools) Mode 6-3
UI Panel Testing 6-4
dC104 Usage Counters 6-4
dC108 Software Versions 6-5
dC120 Fault Counter 6-5
dC122 Fault History 6-6
dC129 System Registration Setup 6-6
dC131 NVM Read/Write 6-7
dC132 Serial Number Synchronize 6-7
dC135 HFSI Counters 6-8
dC137 PagePack 6-9
dC140 Analog Monitor 6-9
dC301 NVM Initialization 6-10
dC312 Network Echo Tests 6-11
dC330 Component Control 6-11
dC361 NVM Save and Restore 6-27
dC608 Document Feeder Registration 6-27
dC609 Document Glass Registration 6-28
dC612 Test Pattern Print 6-28
dC640 Video Path Tests 6-29
dC671 Measurement Cycle 6-29
dC673 RegiCon Control Sensor Check Cycle 6-30
dC675 RegiCon Setup Cycle Control 6-30
dC710 No Paper Run 6-31
dC740 Tray 5 MSI Side Guide Adjustment 6-31
dC909 Calibrate for Paper 6-32
dC919 Color Balance Adjustment 6-33
dC924 TRC Manual Adjustment 6-33
dC940 ProCon On/Off Print 6-34
dC945 IIT Calibration 6-34
dC949 ATC Developer Setup 6-35
dC991 Tone Up/Tone Down 6-35
dC1202 Hole Position Adjustment 6-36

General Procedures

GP 1 FAX PWB Internal Selftest 6-37
GP 2 Accessing Tools 6-37
GP 3 Controller Boot Sequence 6-38
GP 5 Image Quality Calibration 6-38
GP 6 Printing Configuration Reports 6-39
GP 7 Network Printing Simulation 6-39
GP 9 Installing System Software 6-41
GP 10 PWS Communication with the SBC 6-46
GP 11 Resetting the System Administrator Password 6-47
GP 13 Cloning Network Configurations 6-47
GP 14 External Fax Line Test 6-49
GP 16 Toner CRUM Conversion 6-50
GP 18 Restoring the Public Address Book 6-51
GP 20 Reporting Billing Meter Resets 6-52
GP 21 Common Access Card Servicing - TBD 6-52
GP 22 Foreign Device Interface Setup 6-54
GP 23 Intermittent or Noise Problem RAP 6-55
GP 24 How to turn off the Power Saver Functions 6-56
GP 25 Remote Control Panel 6-56

General Information

Product Codes 6-59
Common Tools 6-59
Product Tools and Test Patterns 6-60
Cleaning Materials 6-60
CRUs and Consumables 6-61
Glossary of Terms 6-61

Change Tags

Change Tags 6-65

UI Diagnostic (CSE) Mode

Procedure

1. Press and hold the **0** button for approximately 5 seconds then simultaneously press the **Start** button on the UI. Release both buttons after a few seconds.
2. On the Service Diagnostics Login screen, enter **6789**, then select **Enter**.
3. The UI Diagnostic menu will open.

UI Diagnostic tabs

When the UI Diagnostic menu screen is displayed, you will see the following tab choices: **Service Info**, **Diagnostics**, **Adjustments**, **Maintenance**, and **Call Closeout**. Touch a tab to see the routines available within that group. Touch a dC routine to launch it.

- **Service Info**

  This is the default tab for UI Diagnostics. It contains the following:

  General information (serial #, product code, image count, s/w version, IP address).

  dC104, dC108, dC120, dC122 and dC135
- **Diagnostics**

  This tab contains:

  dC140, dC312, dC330, dC612, and dC640.
- **Adjustments**

  This tab contains:

  dC129, dC131, dC301, dC361, dC608, dC609, dC671, dC673, dC675, dC740, dC909 , dC919, dC924, dC940, dC945, dC949 and dC991.
- **Maintenance**

  This tab contains:

  dC120, dC122, dC132, dC135, dC137, and dC710.
- **Call Closeout**

  The selections within this tab allow you to choose whether the machine is rebooted when you exit UI diagnostic mode, and whether the fault counters are cleared. Touch the **Reset Counters?** square to clear fault history

Service Copy (Tools) Mode

The CSE Service Copy (Tools) mode provides access to the machine that is greater than that of a user but less than that of the System Administrator. This mode allows you to perform a number of checks and run copies without compromising the customer's security settings. This mode can be used if the Administrator user name and passcode are not at the default, and the Administrator is not available to enter the admin passcode. (GP 2)

Entering CSE Service Copy mode

1. Press and hold the **0** button for approximately 10 seconds then simultaneously press the **Start** button on the UI. Release both buttons after a few seconds.
2. On the Service Diagnostics Login screen, enter **2732**, then select **Enter**.
3. The CSE Service Copy mode menu will open.
4. The Tools available in this mode are a subset of those available in Administrator mode.

   NOTE: *CSE Service Copy mode remains active until the* ***Log In/Out*** *button is pressed again. When finished with Tools, always log out of Administrator mode by pressing the* ***Log In/Out*** *button and confirming logout.*

UI Panel Testing

This utility is used to test UI operation. Access the UI tests by simultaneously pressing the *****, **#**, and C buttons. The utility consists of six (6) tests described in ADJ 4.1.

dC104 Usage Counters

Purpose

Displays a history of system usage.

Procedure

1. Enter the UI Diagnostic (CSE) Mode.
2. Select the **Service Info** tab.
3. Select **dC104 Usage Counters**. The Usage Counters screen will be displayed.
4. Touch the **Diagnostic Counters** pull-down to filter the results:
   - **Diagnostic Counters** - lists sheet counters for service operations and tray totals.
   - **Impression Counters** - lists all impressions, categorized by B/W, Color, Large, Small. Print, Copy
   - **Sheet Counters** - Color, B/W, Large, Small
   - **Images Sent Counters** - Fax and Scan
   - **Fax Impressions Counters** - If Fax is enabled, lists the number of received Faxes that were printed
   - **All Usage Counters**

Press the **Update** button for a current count.

dC108 Software Versions

Purpose

Displays the installed software versions for the various modules installed in the system.

Procedure

1. Enter the UI Diagnostic (CSE) Mode.
2. Select the **Service Info** tab.
3. Select **dC108 SW Version**. Dependent on installed options, software version information appears for these modules:
   - Software Upgrade
   - Copy Controller
   - Copy Controller OS
   - DUI H8
   - Fax
   - Imaging Output Terminal
   - Finisher
   - Network Controller
   - Image Input Terminal
   - Document Feeder
   - User Interface
   - XUI Language Version

dC120 Fault Counter

Purpose

Displays the number of occurrences of each IOT fault since the last Service Exit with the **Clear Counters** option selected.

NOTE:

1. Faults detected while in Service Mode are not counted.

2. An Interlock open while the machine is stopped is not counted.

Procedure

1. Enter the UI Diagnostic (CSE) Mode.
2. Select the **Service Info** tab.
3. Select **dC120 Fault Counters**.
4. Select the **Sort On Occurrences** button to list the most frequent faults first.
5. Selecting **Include Zero Occurrences** list all faults in the database; deselecting list only those faults with a recorded occurrence.
6. The screen displays all fault codes in the machine database by **Chain-Link**, **Description**, and **Occurrences** since the last time **Clear Counters** was selected when exiting Diagnostic Mode.
7. To jump to the start of the listing for a particular chain, press the **Chain** button, enter the chain number and press **Find**.

dC122 Fault History

Purpose

To display the last 40 faults.

NOTE:

1. Faults detected while in Service Mode are not counted.

2. An Interlock open while the machine is stopped is not counted.

3. If multiple faults occurred in the machine, the primary fault is recorded.

Procedure

1. Enter the UI Diagnostic (CSE) Mode.
2. Select the **Service Info** tab.
3. Select **dC122 Fault History**.
4. A three column table appears, listing the **Chain Link**, **Description**, and **Date and Time** of the last 40 machine faults.
5. To clear fault history, select **Clear Counters** in the Call Closeout screen.

dC129 System Registration Setup

Purpose

This procedure is used to align the Lead Edge and Side Edge of the developed image with media fed from the various paper trays. Refer to ADJ 9.1 for instructions.

dC131 NVM Read/Write

NOTE: *NVM tables are available at: dC131 NVM Read/Write Tables*

Procedure

1. Enter the UI Diagnostic (CSE) Mode.
2. Select the **Adjustments** tab.
3. Select **dc131 NVM Read/Write**.
4. Enter the NVM Chain/Link in the **NVM ID** window.
5. Select **Read**.

   NOTE: *When an NVM is displayed in the table it will remain displayed until Clear is selected. The Clear button only clears the table display, not an NVM value.*

6. In **Value** window enter new NVM Value. Use the **+/-** key to enter negative numbers.
7. Select **Write** to load the new value.

Figure 1 NVM List Location

dC132 Serial Number Synchronize

Purpose

Serial number data is stored at three locations:

- MDM PWB
- SD on the SBC PWB
- IIT/IPS PWB.

This procedure is used to restore serial number data integrity if these PWBs were replaced incorrectly, or if multiple failures occurred.

It is not necessary to run this procedure if a single PWB is replaced; if these boards are replaced one-at-a-time, the machine will automatically synchronize the data on the new PWB to match the other two. It is only required to perform the procedure if the removal/replacement procedure is not followed correctly.

Initial Action

Check dC122 for communications faults (Chain 303). These can prevent serial number synchronization and must be addressed before proceeding.

Procedure

Part 1 - Notify service support.

NOTE: *It may take up to 24 hours to receive a password from ACAST*

1. Enter the UI Diagnostic (CSE) Mode.
2. Select the **Maintenance Routines** tab.
3. Select **dC132 Machine Serial Number**.

CAUTION

After the Unique Machine Identifier is generated, ***DO NOT*** *touch the* ***Generate Id*** *button again, as this will invalidate the Password that will be provided.*

4. Select **Generate New Identifier Code**. Record the Unique Machine Identifier

NOTE: *Follow all instructions included in the form. You must complete the form, print it, obtain required signatures and data, then scan it.*

5. Contact service support to obtain and receive instruction on how to complete the form.
6. Follow form instructions and warnings carefully.
7. Note that there is a cost for this service.
8. Fill all the information. Print the completed form. Have your budget center manager sign the form. If **any** information is missing, we cannot perform the service.
9. Have National Technical Specialist (NTS, RSE or FE) forward a copy of service log and proof of the location of the machine to **acst01@xerox.com**. This information must indicate machine location, customer name and address.

   The proof may be screen capture of NTS customer support database (account management database), FWSS, ICSS, DFM BT, VQMS, VALE, STPR, etc. The information on the proof must match with the information on the form.
10. Scan the completed form and email to **acast01@xerox.com**.

Part 2 - Reserialize machine

1. Enter the UI Diagnostic (CSE) Mode.

2. Select the **Maintenance Routines** tab.

CAUTION

DO NOT *touch the* ***Generate Id*** *button as this invalidates the Password that will be provided.*

3. Enter the Password received from ACAST in the space for **Submit Password**.
4. Select **Submit Password**.
5. Exit Diagnostic mode
6. Switch the machine power off, then on.

Serial numbers are now synchronized.

dC135 HFSI Counters

Purpose

This routine displays the percentage of service life remaining for periodic replacement parts.

Procedure

1. Enter the UI Diagnostic (CSE) Mode.
2. Select the **Service Info** or **Maintenance** tab.
3. Select **dC135 CRU/HFSI Counters**.
4. The CRU/HFSI screen lists the serviceable items and displays Estimated Pages Remaining.
5. Refer to Detailed Maintenance Activities (HFSI) in Section 1. Perform the listed Service Action for all HSFI counters that are at or near end of life.
6. To reset the count after replacing the parts, select the appropriate HFSI item, then select the **Reset Counter** button.

dC137 PagePack

Purpose

The European “PagePack” program allows customers to purchase a device and then pay a fixed amount each month for supplies and service. Pricing varies with volume, and there are minimum volume commitments. The devices are sold as PagePack machines; there is no way of converting to/from PagePack in the field.

The European “eClick” program is targeted at large accounts with many devices, often spread across several sites. The devices are managed centrally, and the customers pay on a per-page basis. eClick machines can use metered or sold supplies.

With the European “Toner Out” program, customers purchase the devices and then buy “sold” supplies as and when needed.

The North American “PagePack” program has several key differences from the original European program. Firstly, the device(s) are managed and monitored by the PagePack Assistant (PPA) software, which is also responsible for sending usage data back to Xerox. Secondly, a device can be converted to a PagePack machine in the field. This is not possible in Europe, where the PagePack devices are configured either at manufacture or installation. (PPA is a client application that runs on the customer’s PC).

The “PagePack PIN” is a 4 digit code that is typically entered at the Local UI in order to enable a PagePack device. The PIN is an absolute requirement in Europe, since it ensures timely registration of the PagePack contracts with Xerox. When a European PagePack machine is powered up for the first time, it can only be used for a limited number of prints until the PIN must be entered. After the “grace” period the machine will not operate until a valid authorization PIN is entered.

When a European PagePack contract is registered, Xerox provides the PIN to the customer, who then types it in at the device UI. The device compares its internally generated PIN to the one entered by the customer, and then enables the device and the metered supplies (or not). Entering the PIN at the Local UI is not a requirement for eClick or NA PagePack devices, but the PIN mechanism may still be needed to enable the device to work with metered supplies.

NOTE: *There are other contract types available, and to make the user interface more flexible it is recommended that any contract PIN’s be referred to as an ‘Activation Code’.*

Procedure

1. Enter the UI Diagnostic (CSE) Mode.
2. Select the **Maintenance** tab.
3. Select **dc137 PagePack.**
4. Select **Enable**.
5. **Enter** the 4 digit PagePack Passcode. Select, **Save**.

dC140 Analog Monitor

Purpose

This routine monitors the status of sensors listed in Table 1. Temporary change of output values is possible.

Procedure

1. Enter the UI Diagnostic (CSE) Mode.
2. Select the **Diagnostics** tab.
3. Select **dC140 Analog Monitor**.

   The system displays the **Analog Monitor** screen.

   a. The system displays the **Component** names with the **ID**, **Status**, **Range** and **Value**.

   b. The status of all output components show **Inactive**. The **Value** columns are blank.
4. To run an output component check:

   a. Select a component to check.

   b. Select **Start** on the menu screen displayed.

   c. The output component in the machine is switched on.

   d. The output component status changes to **Active**.

   e. The bit count is displayed in the **Value** column.

   f. You can switch on an input component to monitor the output component in the machine.

   NOTE: *If the component has a runtime restriction, the component is switched on for that period and automatically switched off.*

   NOTE: *Some components cannot be energized at the same time as another component. If you activate such a combination of components, the first component switched on will be automatically switched off.*

   NOTE: *If the component cannot be automatically turned off, the following message appears:* ***Cannot check the component. Stop another output component****.*

Checking multiple components

1. To check multiple components simultaneously, repeat Step 4a through 4f.
2. To stop the check, select **Stop** while the component is selected, or select **Stop All,** which switches off all output components.

Table 1 DC140 Analog Monitor Codes List

ID	Component Name	Functional Description
010.200	Heat Roll Center Inferred	Heat Roll temperature at center AD value
010.201	Heat Roll Temp Compensation	Heat Roll temperature AD value
010.202	Heat Roll Center Difference	
010.203	Heat Roll STS	Heat Roll STS temperature AD value
071.200	Tray1 Size Sensor	Displays AD value for Tray1 Paper Size.
072.200	Tray2 Size Sensor	Displays AD value for Tray2 Paper Size.
073.200	Tray3 Size Sensor	Displays AD value for Tray3 Paper Size.
074.200	Tray4 Size Sensor	Displays AD value for Tray4 Paper Size.

Table 1 DC140 Analog Monitor Codes List

ID	Component Name	Functional Description
075.200	MSI Size Sensor	Displays AD value for MSI Paper Size.
092.200	TMA Sensor F SPC	Front TMA Sensor AD value
092.201	TMA Sensor F DFS	Front DFS Sensor AD value
092.202	TMA Sensor R SPC	Rear SPC Sensor AD value
092.203	TMA Sensor R DFS	Rear DFS Sensor AD value
092.204	EMV Temp Sensor	Temperature Sensor AD value
092.205	EMV Humidity Sensor	Humidity Sensor AD value
092.206	ATC Sensor Y	Detection of TC in Y-color Developer Housing
092.207	ATC Sensor M	Detection of TC in M-color Developer Housing
092.208	ATC Sensor C	Detection of TC in C-color Developer Housing
092.209	ATC Sensor K	Detection of TC in K-color Developer Housing

dC301 NVM Initialization

Purpose

This procedure may be needed when the machine cannot recover for some unknown reasons, including problems such as producing blank copies/prints, continuously declaring system faults, etc. It is also required as part of the software upgrade process.

Initial Actions

- Disconnect any Foreign Interface devices.
- Obtain all of the following information:
  - Saved Machine Settings, if possible.
  - NVM value factory setting report (typically it is located in the Tray 1 pocket)
  - Any customer setting Auditron account from the system administrator
  - Any setting changes (specifically NVM settings) shown on the machine's service log.
  - Any customer settings in the Tools mode.
- If possible, save Critical NVM (dC361).

Procedure

1. Enter the UI Diagnostic (CSE) Mode.
2. Select the **Adjustments** tab.
3. Select the **dC301 NVM Initialization** tab.
4. Select the **Domain, Sub Domain,** and **NVM Data** location using the radio buttons and check boxes on the UI screen.
5. Select **Initialize** to run the routine. (Select **Close** to exit the routine without running it.)
6. When prompted by the software **Are you sure you want to initialize?** select **Initialize**.
7. After the initialization is complete, use the data accumulated in **Initial Actions** to restore the machine to its previous configuration.

dC312 Network Echo Tests

Purpose

Tests the machine's capability to communicate on the network.

Procedure

1. Enter the UI Diagnostic (CSE) Mode.
2. Select the **Diagnostics** tab.
3. Select **dC312 Network Echo Test**. The Network Echo Test screen will then appear.

NOTE: *Protocols that are not enabled will not be selectable (they will be grayed out).*

4. Select the **Protocol** to be tested
5. Select the **Start Test** button. The test will run. A message will be displayed on the UI indicating the test was successful

dC330 Component Control

Purpose

The purpose of dC330 Component Control is to actuate or monitor the operation of individual or multiple related components.

Procedure

1. Enter the UI Diagnostic (CSE) Mode.
2. Select the **Diagnostics** tab.
3. Select **dC330 Component Control**.
4. The dC330 screen is displayed. There are two tables. the upper table is a listing of all component control codes, selectable by Chain. The lower table contains codes to be activated.

   The display indicates the following:

   - Chain/Link
   - I/O (whether component is Input (I) or Output (O))
   - Description

Finding a code

Locate a specific code by scrolling through the UI or select from the following tables:

1. DADF Chain 005 Component Control Codes - Table 1

   Fuser Chain 10 Component Control Codes - Table 2

   A-Finisher (Integrated) Chain 12 Component Control Codes - Table 3

   SB-Finisher (LX) Chain 12 Component Control Codes - Table 4

   SB-Finisher (LX) Booklet Maker Chain 13 Component Control Codes - Table 5

   FAX Chain 20 Component Control Codes - Table 6

   Drives/Fans Chain 42 Component Control Codes - Table 7

   Scanner Chain 62 Component Control Codes - Table 8

   Tray 1 Chain 71 Component Control Codes - Table 9

   Tray 2 Chain 72 Component Control Codes - Table 10

   Tray 3 Chain 73 Component Control Codes - Table 11

   Tray 4 Chain 74 Component Control Codes - Table 12

   Tray 5 Bypass Chain 75 Component Control Codes - Table 13

   IOT Media Path Chain 77 Component Control Codes - Table 14

   TMA LED Chain 89 Component Control Codes - Table 15

   IOT Xerographics Chain 91 Component Control Codes - Table 16

   IOT TMA Chain 92 Component Control Codes - Table 17

   IOT Developer Drive Chain 93 Component Control Codes - Table 18

   IOT Transfer Belt Component Control Codes - Table 19
2. Component control codes in the tables are arranged by Chain. Touch the **Chain** button and select a chain. The codes within that chain are listed.
3. Select the desired code. A popup menu gives you the choice to either **Close Menu** or **Add** the code to the lower table.

Activating a code

CAUTION

Some components have special machine safety requirements, such as removing the IBT assembly before running the IBT Drive, etc. Read the code description in tables 1 - 19 in order to avoid machine damage.

1. To add a code directly to the lower table, touch the **Chain-link** icon on the UI. Use the keypad to enter the complete 6-digit component control code, then touch the **Add** button.
2. Codes are activated by touching the entry in the lower table. Select the desired action from the popup table that occurs.

NOTE: *If the component has a runtime restriction, the component is switched on for that period and automatically switched off.*

3. Press the **Stop** or **Stop All** button, or double click the active component in the Active Stack box to end the test. The ID and Active Stack components are removed from the Active Stack box.

Stacking Component Codes

NOTE: *Some components cannot be energized at the same time as another component. If you activate such a combination of components, the first component switched on will be automatically switched off. If the component cannot be automatically turned off, the following message appears:!* ***Cannot check the component. Stop another output component***

1. To stack several codes, select the first code and press **Start**, then select the next code and press **Start**. Continue to enter up to eleven codes.
2. The state changes to Run; H or L as applicable.
3. Stop a highlighted component by pressing **Stop** or
4. To switch off all components, press **Stop All**.

Table 1 DADF Chain 005 Component Control Codes

Chain Link	Component	Device	Module	Type	Conflicts	Timeout	Display	Description
005-001	CVT-DADF feed motor _ speed 1	IIT	DADF	Output	005-002 thru 005-010, 005-013, 005-014, 005-074	50 sec	On	Run Feed Motor at speed 1
005-002	CVT- ADF feed motor _ speed 2	IIT	DADF	Output	005-001, 005-003 thru 005-010, 005-013, 005-014, 005-074	50 sec	On	Run Feed Motor at speed 2
005-004	CVT-DADF feed motor _ speed 4	IIT	DADF	Output	005-001 thru 005-003,005-005 thru 005-010, 005-013, 005-014, 005-074	50 sec	On	Run Feed Motor at speed 4
005-005	CVT-DADF feed motor _ speed 5	IIT	DADF	Output	005-001 thru 005-004, 005-006 thru 005-010, 005-013, 005-014, 005-074	50 sec	On	Run Feed Motor at speed 5
005-008	CVT-DADF feed motor _ speed 8	IIT	DADF	Output	005-001 thru 005-007, 005-009, 005-010, 005-013, 005-014, 005-074	50 sec	On	Run Feed Motor at speed 8
005-010	CVT-DADF feed motor _ speed 10	IIT	DADF	Output	005-001 thru 005-009, 005-013, 005-014, 005-074	50 sec	On	Run Feed Motor at speed 10
005-015	CVT-DADF pre reg motor _ speed 1	IIT	DADF	Output	005-016 thru 005-025, 005-076, 005-077, 005-089	50 sec	On	Run Pre Reg Motor at speed 1
005-020	CVT-DADF pre reg motor _ speed 6	IIT	DADF	Output	005-015 thru 005-019, 005-021 thru 005-025, 005-076, 005-077, 005-089	50 sec	On	Run Pre Reg Motor at speed 6
005-021	CVT-DADF pre reg motor _ speed 7	IIT	DADF	Output	005-015 thru 020, 005-022 thru 005-025, 005-076, 005-077, 005-089	50 sec	On	Run Pre Reg Motor at speed 7
005-026	CVT-DADF reg motor _ speed 1	IIT	DADF	Output	005-027 thru 005-036, 005-078 thru 005-080	50 sec	On	Run Registration Motor at speed 1
005-027	CVT-DADF reg motor _ speed 2	IIT	DADF	Output	005-026, 005-028 thru 005-036, 005-078 thru 005-080	50 sec	On	Run Registration Motor at speed 2
005-029	CVT-DADF reg motor _ speed 4	IIT	DADF	Output	005-026 thru 005-028, 005-030 thru 005-036, 005-078 thru 005-080	50 sec	On	Run Registration Motor at speed 4
005-030	CVT-DADF reg motor _ speed 5	IIT	DADF	Output	005-026 thru 005-029, 005-031 thru 005-036, 005-078 thru 005-080	50 sec	On	Run Registration Motor at speed 5
005-033	CVT-DADF reg motor _ speed 8	IIT	DADF	Output	005-026 thru 005-032, 005-034 thru 005-036, 005-078 thru 005-080	50 sec	On	Run Registration Motor at speed 8
005-035	CVT-DADF reg motor _ speed 10	IIT	DADF	Output	005-026 thru 005-034, 005-036, 005-078 thru 005-080	50 sec	On	Run Registration Motor speed 10 Note: Not in SM but on DADF K15-
005-072	Nip release solenoid_PF2	IIT	DADF	Output		3 sec	On	Actuate nip release solenoid 2

Table 1 DADF Chain 005 Component Control Codes

Chain Link	Component	Device	Module	Type	Conflicts	Timeout	Display	Description
005-083	Doc ready	IIT	DADF	Output		None	On	Turn doc ready signal on
005-084	Doc SetLED	IIT	DADF	Output		5 sec	On	Turn SetLED on CVT mode-
005-088	Image area	IIT	DADF	Output		5 sec	On	Not in BSD but listed elsewhere
005-090	Nudger initialize	IIT	DADF	Output		None	On	Initialization of Nudger roll
005-093	Nudger Motor CW (PF2)	IIT	DADF	Output	005-09, 005-094	5 sec	On	Not in BSD but listed elsewhere
005-102	DADF Document Set Sensor	IIT	DADF	Input		None	High/Low	Low if document present
005-110	DADF Regi Sensor	IIT	DADF	Input		None	High/Low	Low if document present
005-205	CVT-DADF feed out sensor	IIT	DADF	Input		None	High/Low	Paper at Feed Out Sensor
005-206	CVT-DADF pre-reg sensor	IIT	DADF	Input		None	High/Low	Paper at Pre-Reg Sensor
005-211	CVT-DADF invert sensor	IIT	DADF	Input		None	High/Low	Paper at DADF invert sensor
005-212	CVT-DADF feeder interlock switch	IIT	DADF	Input		None	High/Low	DADF Top cover interlock open
005-213	CVT-DADF Platen interlock switch	IIT	DADF	Input		None	High/Low	DADF Platen interlock open
005-215	CVT-DADF #1 Tray APS sensor	IIT	DADF	Input		None	High/Low	Paper at DADF Feeder Tray Automatic Paper Selection (APS) sensor #1-
005-216	CVT-DADF #2 Tray APS sensor	IIT	DADF	Input		None	High/Low	Paper at DADF Feeder Tray Automatic Paper Selection (APS)sensor #2-
005-217	CVT-DADF #3 Tray APS sensor	IIT	DADF	Input		None	High/Low	Paper at DADF Feeder Tray Automatic Paper Selection (APS) sensor #3-
005-218	CVT-DADF #1 APS sensor	IIT	DADF	Input		None	High/Low	Paper at DADF Upper chuteAutomatic Paper Selection (APS) sensor #1
005-219	CVT-DADF #2 APS sensor	IIT	DADF	Input		None	High/Low	Paper at DADF Upper chute Automatic Paper Selection (APS) sensor #2
005-220	CVT-DADF #3 APS sensor	IIT	DADF	Input		None	High/Low	Paper at DADF Upper chute Automatic Paper Selection (APS) sensor #3
005-221	CV -DADF Tray size sensor #1	IIT	DADF	Input		None	High/Low	DADF Tray size sensor #1
005-222	CVT-DADF Tray size sensor #2	IIT	DADF	Input		None	High/Low	DADF Tray size sensor #2
005-224	Scan start	IIT	DADF	Input		None	High/Low	Scan Start
005-227	A3 Exist	IIT	DADH	Input		None	High/Low	L:A3, H:A4
005-228	APS Sensor exist	IIT	DADH	Input		None	High/Low	L: No Sensor; H: Sensor

Table 2 Fuser Chain 10 Component Control Codes

Chain Link	Component	Device	Module	Type	Conflicts	Timeout	Display	Description
010-001	Fuser Motor 126mm/s	IOT	Fuser	Output	010-002	None	On/Off	Run the Fuser Motor at speed-
010-002	Fuser Motor 63mm/s	IOT	Fuser	Output	010-001	None	On/Off	Run the Fuser Motor at speed

Table 3 A-Finisher (Integrated) Chain 12 Component Control Codes

Chain Link	Component	Device	Module	Type	Conflicts	Timeout	Display	Description
012-013	Sub Paddle Solenoid	IOT	A-Finisher	Output	012-014	660ms	On/Off	Rotation of the sub paddle
012-014	Sub Paddle rotation	IOT	A-Finisher	Output	012-013, 012-095 thru 012-097	Mot: 3262 pulses and sol: 660ms	On/Off	A 360 degree roll of the sub paddle (move the transport motor forward on at the same time when the sub paddle-)
012-017	Set Clamp Motor On	IOT	A-Finisher	Output		250 pulse	On/Off	Normal rotation of the Set Clamp Motor
012-020	Front Tamper Motor Low Speed - Front	IOT	A-Finisher	Output	012-021 thru 012-025	100 pulse	On/Off	Move front tamper to front at low speed-
012-021	Front Tamper Motor Medium Speed - Front	IOT	A-Finisher	Output	012-020, 012-022 thru 012-025	100 pulse	On/Off	Move front tamper to front at middle speed-
012-022	Front Tamper Motor High Speed - Front	IOT	A-Finisher	Output	012-020, 012-021, 012-023 thru 012-025	100 pulse	On/Off	Move front tamper to front at high speed-
012-023	Front Tamper Motor Low Speed - Rear	IOT	A-Finisher	Output	012-020 thru 012-022, 012-024, 012-025	100 pulse	On/Off	Move front tamper to rear at low speed-
012-024	Front Tamper Motor Medium Speed - Rear	IOT	A-Finisher	Output	012-020 thru 012-023, 012-025	100 pulse	On/Off	Move front tamper to rear at medium speed
012-025	Front Tamper Motor High Speed - Rear	IOT	A-Finisher	Output	012-020 thru 012-024	100 pulse	On/Off	Move front tamper to rear at high speed
012-026	Rear Tamper Motor Low Speed - Front	IOT	A-Finisher	Output	012-027 thru 012-031	100 pulse	On/Off	Move rear tamper to front at low speed-
012-027	Rear Tamper Motor Middle Speed - Front	IOT	A-Finisher	Output	012-026, 012-028 thru 012-031	100 pulse	On/Off	Move rear tamper to front at middle speed-
012-028	Rear Tamper Motor High Speed - Front	IOT	A-Finisher	Output	012-026, 012-027, 012-029 thru 012-031	100 pulse	On/Off	Move rear tamper to front at high speed-
012-029	Rear Tamper Motor Low Speed - Rear	IOT	A-Finisher	Output	012-026, 012-028, 012-031	100 pulse	On/Off	Move rear tamper to rear at low speed-
012-030	Rear Tamper Motor Middle Speed - Rear	IOT	A-Finisher	Output	012-026 thru 012-029, 012-031	100 pulse	On/Off	Move rear tamper to rear at medium speed
012-031	Rear Tamper Motor High Speed - Rear	IOT	A-Finisher	Output	012-026 thru 012-030	100 pulse	On/Off	Move rear tamper to rear at high speed
012-046	Staple Motor Forward On	IOT	A-Finisher	Output	012-047	None	On/Off	Normal rotation of the Staple Motor
012-047	Staple Motor Reverse On	IOT	A-Finisher	Output	012-046	180ms	On/Off	Reverse rotation of the Staple Motor
012-054	Eject Motor Low Forward On	IOT	A-Finisher	Output	012-055 thru 012-057	2000 pulse	On/Off	Rotate Eject Motor at low speed
012-055	Eject Motor High Forward On	IOT	A-Finisher	Output	012-054, 012-056, 012-057	2000 pulse	On/Off	Rotate Eject Motor at high speed
012-056	Eject Motor Low Reverse On	IOT	A-Finisher	Output	012-054, 012-055, 012-057	2000 pulse	On/Off	Reverse the Eject Motor at low speed
012-057	Eject Motor High Reverse On	IOT	A-Finisher	Output	012-054 thru 012-056	2000 pulse	On/Off	Reverse the Eject Motor at High speed
012-060	Stacker Motor Up On	IOT	A-Finisher	Output	012-061	80ms	On/Off	Lift Stacker Tray
012-061	Stacker Motor Down On	IOT	A-Finisher	Output	012-060	80ms	On/Off	Move down the stack tray
012-095	Transport Motor Low	IOT	A-Finisher	Output	012-014, 012-096, 012-097, 012-098	None	On/Off	Rotate transport motor at low speed - equivalent to IOT at full process speed-
012-096	Transport Motor high Forward	IOT	A-Finisher	Output	012-014, 012-096, 012-097, 012-098	None	On/Off	Rotate Transport Motor at high speed
012-097	Transport Motor Half Forward	IOT	A-Finisher	Output	012-014, 012-095, 012-096, 012-098	None	On/Off	Rotate Transport Motor at half speed
012-098	Transport Motor Medium Forward	IOT	A-Finisher	Output	012-014, 012-095, 012-096, 012-097	None	On/Off	Rotate Transport Motor at medium speed
012-110	Regi Clutch ON	IOT	A-Finisher	Input		None	High/Low	IOT registration clutch- Clutch On = High
012-111	IOT Exit Sensor	IOT	A-Finisher	Input		None	High/Low	Paper exits = Low
012-140	Entrance Sensor	IOT	A-Finisher	Input		None	High/Low	Paper exits = High
012-150	Compile Exit Sensor	IOT	A-Finisher	Input		None	High/Low	Paper exits = High
012-220	Front Tamper Home Sensor	IOT	A-Finisher	Input		None	High/Low	Not home = High
012-221	Rear Tamper Home Sensor	IOT	A-Finisher	Input		None	High/Low	Not home = High

Table 3 A-Finisher (Integrated) Chain 12 Component Control Codes

Chain Link	Component	Device	Module	Type	Conflicts	Timeout	Display	Description
012-242	Low Staple Sensor	IOT	A-Finisher	Input		None	High/Low	
012-243	Self Priming Sensor	IOT	A-Finisher	Input		None	High/Low	High= Not ready
012-244	Staple Home Sensor	IOT	A-Finisher	Input		None	High/Low	High= not home
012-251	Set Clamp Home Sensor	IOT	A-Finisher	Input		None	High/Low	Not home = High
012-252	Eject Home Sensor	IOT	A-Finisher	Input		None	High/Low	High= Not home
012-267	Stack Height Sensor	IOT	A-Finisher	Input		None	High/Low	Low = Stack height
012-278	Stack Height 1	IOT	A-Finisher	Input		None	High/Low	Light shield exits
012-279	Stack Height 2	IOT	A-Finisher	Input		None	High/Low	Light shield exits
012-300	Top Cover Interlock	IOT	A-Finisher	Input		None	High/Low	High = Open
012-302	Finisher Front Door switch	IOT	A-Finisher	Input		None	High/Low	High = Open

Table 4 SB-Finisher (LX) Chain 12 Component Control Codes

Chain Link	Component	Device	Module	Type	Conflicts	Timeout	Display	Description
012-013	Sub Paddle Solenoid	IOT	SB-Finisher	Output		250ms	On/Off	Activate Sub paddle Solenoid
012-018	Transport Motor Reverse	IOT	SB-Finisher	Output	012-036 thru 012-038	None	On/Off	Revers Transport Motor rotation
012-020	Front Tamper Motor Low Speed - Front	IOT	SB-Finisher	Output	012-022, 012-023, 012-025	82 pulses	On/Off	Front Tamper Motor to front at low speed
012-022	Front Tamper Motor High Speed - Front	IOT	SB-Finisher	Output	012-020, 012-021, 012-023 thru 012-025	82 pulses	On/Off	Front Tamper Motor to front at high speed
012-023	Front Tamper Motor Low Speed - Rear	IOT	SB-Finisher	Output	012-020 thru 012-022, 012-025	100 pulses	On/Off	Front Tamper Motor to rear at low speed
012-025	Front Tamper Motor High Speed - Rear	IOT	SB-Finisher	Output	012-020, 012-022, 012-023	82 pulses	On/Off	Front Tamper Motor to rear at high speed
012-026	Rear Tamper Motor Low Speed - Front	IOT	SB-Finisher	Output	012-028, 012-029, 012-031	82 pulses	On/Off	Rear Tamper Motor to front at low speed
012-028	Rear Tamper Motor High Speed - Front	IOT	SB-Finisher	Output	012-026, 012-029, 012-031	82 pulses	On/Off	Rear Tamper Motor to front at high speed
012-029	Rear Tamper Motor Low Speed - Rear	IOT	SB-Finisher	Output	012-026, 012-028, 012-031	82 pulses	On/Off	Rear Tamper Motor to rear at low speed
012-031	Rear Tamper Motor High Speed - Rear	IOT	SB-Finisher	Output	012-026, 012-028, 012-029	82 pulses	On/Off	Rear Tamper Motor to rear at high speed
012-032	Xport Motor 1	IOT	SB-Finisher	Output	012-033, 012-034, 012-035, 012-039	None	On/Off	Xport Motor at speed 1
012-033	Xport Motor 2	IOT	SB-Finisher	Output	012-032, 012-034, 012-035, 012-039	None	On/Off	Xport Motor at speed 2
012-034	Xport Motor 3	IOT	SB-Finisher	Output	012-032, 012-033, 012-035, 012-039	None	On/Off	Xport Motor at speed 3
012-035	Xport Motor 4	IOT	SB-Finisher	Output	012-032 thru 012-034, 012-039	None	On/Off	Xport Motor at speed 4
012-036	Transport Motor 1	IOT	SB-Finisher	Output	012-037, 012-038, 012-018	None	On/Off	Transport Motor at speed 1
012-037	Transport Motor 2	IOT	SB-Finisher	Output	012-036, 012-038, 012-018	None	On/Off	Transport Motor at speed 1
012-038	Transport Motor 3	IOT	SB-Finisher	Output	012-037, 012-038, 012-018	None	On/Off	Transport Motor at speed 1
012-039	Xport Motor Reverse	IOT	SB-Finisher	Output	012-032 thru 012-035	None	On/Off	Reverse Xport Motor rotation
012-040	Stapler Move Front Move - Low speed	IOT	SB-Finisher	Output	012-042, 012-043, 012-035	400 pulses	On/Off	Stapler Move Motor to front at low speed
012-042	Stapler Move Motor High Front On	IOT	SB-Finisher	Output	012-040, 012-043, 012-045	400 pulses	On/Off	Stapler Move Motor to front at high speed
012-043	Stapler Move Motor Low Rear On	IOT	SB-Finisher	Output	012-040, 012-042, 012-045	400 pulses	On/Off	Stapler Move Motor to rear at low speed
012-045	Stapler Move Motor High Rear On	IOT	SB-Finisher	Output	012-040, 012-042, 012-043	400 pulses	On/Off	Stapler Move Motor to rear at high speed

Table 4 SB-Finisher (LX) Chain 12 Component Control Codes

Chain Link	Component	Device	Module	Type	Conflicts	Timeout	Display	Description
012-046	Staple Motor Forward On	IOT	SB-Finisher	Output	012-047	None	On/Off	Stapler Motor forward rotation
012-047	Staple Motor Reverse On	IOT	SB-Finisher	Output	012-046	None	On/Off	Stapler Motor reverse rotation
012-050	Set Clamp Clutch On	IOT	SB-Finisher	Output		200msec	On/Off	Actuate Set Clamp Clutch
012-052	Eject Clamp Up	IOT	SB-Finisher	Output	012-053 thru 012-055	None	On/Off	Raise Eject Clamp
012-053	Eject Clamp Down	IOT	SB-Finisher	Output	012-052, 012-054, 012-055	None	On/Off	Lower Eject Clamp
012-054	Eject Motor Low Forward On	IOT	SB-Finisher	Output	012-052, 012-053, 012-055	1136 pulse	On/Off	Eject Motor forward at low speed
012-055	Eject Motor High Forward On	IOT	SB-Finisher	Output	012-052 thru 012-054	1136 pulse	On/Off	Eject Motor forward at high speed
012-060	Stacker Motor Up On	IOT	SB-Finisher	Output	012-061	500msec	On/Off	Move Stacker Tray up with Stacker Motor
012-061	Stacker Motor Down On	IOT	SB-Finisher	Output	012-060	500msec	On/Off	Move Stacker Tray down with Stacker Motor
012-074	Punch Motor Home Move	IOT	SB-Finisher	Output	012-074, 012-078, 012-079	None	On/Off	Move Punch motor to home position
012-077	Punch - 2 hole	IOT	SB-Finisher	Input	012-074, 012-078, 012-079	None	On/Off	Actuate 2-hole punch
012-078	Punch - 3 hole	IOT	SB-Finisher	Input	012-074, 012-077, 012-079	None	On/Off	Actuate 3-hole punch
012-079	Punch - 4 hole	IOT	SB-Finisher	Input		None	On/Off	Actuate 4-hole punch
012-100	Transport Entrance Sensor	IOT	SB-Finisher	Input		None	High/Low	high with paper
012-110	Regi Clutch ON	IOT	SB-Finisher	Input		None	High/Low	IOT registration clutch- Clutch On = High
012-111	IOT Exit Sensor	IOT	SB-Finisher	Input		None	High/Low	Paper exits = Low
012-150	Compile Exit Sensor	IOT	SB-Finisher	Input		None	High/Low	Paper exits = High
012-151	Compile Tray NO Paper Sensor	IOT	SB-Finisher	input		None	High/Low	
012-190	H-Xport Entrance Sensor	IOT	SB-Finisher	Input		None	High/Low	High with paper
012-220	Front Tamper Home Sensor	IOT	SB-Finisher	Input		None	High/Low	Not home = High
012-221	Rear Tamper Home Sensor	IOT	SB-Finisherr	Input		None	High/Low	Not home = High
012-241	Stapler Move Position Sensor	IOT	SB-Finisher	Input		None	High/Low	
012-242	Low Staple Sensor	IOT	SB-Finisher	Input		None	High/Low	
012-243	Self Priming Sensor	IOT	SB-Finisher	Input		None	High/Low	High= Not ready
012-244	Staple Home Sensor	IOT	SB-Finisher	Input		None	High/Low	High= not home
012-250	Eject Clamp Home Sensor	IOT	SB-Finisher	Input		None	High/Low	
012-251	Set Clamp Home Sensor	IOT	A-Finisher	Input		None	High/Low	Not home = High
012-262	Stacker NO Paper Sensor	IOT	SB-Finisher	Input		None	High/Low	
012-263	Stack Encoder Sensor	IOT	SB-Finisher	Input		None	High/Low	
012-264	Stack Height Sensor 1	IOT	SB-Finisher	Input		None	High/Low	
012-265	Stack Height Sensor 2	IOT	SB-Finisher	Input		None	High/Low	
012-271	Puncher Home Sensor	IOT	SB-Finisher	Input		None	High/Low	
012-274	Puncher Encoder Sensor	IOT	SB-Finisher	Input		None	High/Low	
012-275	Punch BOX SetSensor	IOT	SB-Finisher	Input		None	High/Low	
012-277	Puncher Detect	IOT	SB-Finisher	Input		None	High/Low	
012-300	Eject Cover Switch	IOT	SB-Finisher	Input		None	High/Low	
012-302	Finisher Front Door switch	IOT	SB-Finisher	Input		None	High/Low	High = Open
012-303	H-Xport Open Sensor	IOT	SB-Finisher	Input		None	High/Low	

Table 5 SB-Finisher (LX) with Booklet Maker Chain 13 Component Control Codes

Chain Link	Component	Device	Module	Type	Conflicts	Timeout	Display	Description
013-022	Knife Motor Forward On	PRO	SB-Finisher	Output	013-023	None	On/Off	
013-023	Knife Motor Reverse On	PRO	SB-Finisher	Output	013-022	None	On/Off	
013-024	Booklet Staple Motor F Forward	PRO	SB-Finisher	Output	013-025	None	On/Off	
013-025	Booklet Staple Motor F Reverse	PRO	SB-Finisher	Output	013-024	None	On/Off	
013-026	Booklet Staple Motor R Forward	PRO	SB-Finisher	Output	013-027	None	On/Off	
013-027	Booklet Staple Motor R Reverse	PRO	SB-Finisher	Output	013-026	None	On/Off	
013-028	Booklet Staple Move Motor In	PRO	SB-Finisher	Output	013-029	350 pulse	On/Off	
013-029	Booklet Staple Move Motor Out	PRO	SB-Finisher	Output	013-028	350 pulse	On/Off	
013-101	Knife Home Sensor	PRO	SB-Finisher	Input		None	High/Low	
013-107	Booklet Low Staple F Switch	PRO	SB-Finisher	Input		None	High/Low	
013-108	Booklet Low Staple R Switch	PRO	SB-Finisher	Input		None	High/Low	
013-141	Booklet Staple Cam Front Switch	PRO	SB-Finisher	Input		None	High/Low	
013-142	Booklet Staple Cam Rear Switch	PRO	SB-Finisher	Input		None	High/Low	
013-143	Booklet Staple Move Home Sensor	PRO	SB-Finisher	Input		None	High/Low	
013-160	Folder Detect	PRO	SB-Finisher	Input		None	High/Low	
013-161	Booklet Detect	PRO	SB-Finisher	Input		None	High/Low	
013-300	Booklet Cover Open Switch	PRO	SB-Finisher	Input		None	High/Low	
013-301	Booklet Safety Switch	PRO	SB-Finisher	Input		None	High/Low	

Table 6 IOT FAX Chain 20 Component Control Codes

Chain Link	Component	Device	Module	Type	Conflicts	Timeout	Display	Description
020-010	Single Tone 0Hz Ln1	FAX	FAX	Output			On/Off	Emits single tone 0Hz on line 1
020-011	Single Tone 400Hz Ln1	FAX	FAX	Output			On/Off	Emits single tone 400Hz on line 1
020-012	Single Tone 1100Hz Ln1	FAX	FAX	Output			On/Off	Emits single tone 1100Hz on line 1
020-013	Single Tone 1300Hz Ln1	FAX	FAX	Output			On/Off	Emits single tone 1300Hz on line 1
020-014	Single Tone 1650Hz Ln1	FAX	FAX	Output			On/Off	Emits single tone 1650Hz on line 1
020-015	Single Tone 1850Hz Ln1	FAX	FAX	Output			On/Off	Emits single tone 1850Hz on line 1
020-016	Single Tone 2100Hz Ln1	FAX	FAX	Output			On/Off	Emits single tone 2100Hz on line 1
020-017	ANSAM Ln1	FAX	FAX	Output			On/Off	
020-018	CI Ln1	FAX	FAX	Output			On/Off	
020-020	DTMF # Line1	FAX	FAX	Output			On/Off	Emits DTMF # on line 1
020-021	DTMF * Line1	FAX	FAX	Output			On/Off	Emits DTMF * on line 1
020-022	DTMF 0 Line1	FAX	FAX	Output			On/Off	Emits DTMF 0 on line 1
020-023	DTMF 1 Line1	FAX	FAX	Output			On/Off	Emits DTMF 1 on line 1
020-024	DTMF 2 Line1	FAX	FAX	Output			On/Off	Emits DTMF 2 on line 1
020-025	DTMF 3 Line1	FAX	FAX	Output			On/Off	Emits DTMF 3 on line 1
020-026	DTMF 4 Line1	FAX	FAX	Output			On/Off	Emits DTMF 4 on line 1
020-027	DTMF 5 Line1	FAX	FAX	Output			On/Off	Emits DTMF 5 on line 1
020-028	DTMF 6 Line1	FAX	FAX	Output			On/Off	Emits DTMF 6 on line 1

Table 6 IOT FAX Chain 20 Component Control Codes

Chain Link	Component	Device	Module	Type	Conflicts	Timeout	Display	Description
020-029	DTMF 7 Line1	FAX	FAX	Output			On/Off	Emits DTMF 7 on line 1
020-030	DTMF 8 Line1	FAX	FAX	Output			On/Off	Emits DTMF 8 on line 1
020-031	DTMF 9 Line1	FAX	FAX	Output			On/Off	Emits DTMF 9 on line 1
020-032	DTMF A Line1	FAX	FAX	Output			On/Off	Emits DTMF A on line 1
020-033	DTMF B Line1	FAX	FAX	Output			On/Off	Emits DTMF B on line 1
020-034	DTMF C Line1	FAX	FAX	Output			On/Off	Emits DTMF C on line 1
020-035	DTMF D Line1	FAX	FAX	Output			On/Off	Emits DTMF D on line 1
020-040	V.21 300 bps Line1	FAX	FAX	Output			On/Off	Emits V.21 300 bps Line1
020-041	V.27ter 2400 bps Line1	FAX	FAX	Output			On/Off	Emits V.27ter 2400 bps Line1
020-042	V.27ter 4800 bps Line1	FAX	FAX	Output			On/Off	Emits V.27ter 4800 bps Line1
020-043	V.29 7200 bps Line1	FAX	FAX	Output			On/Off	Emits V.29 7200 bps Line1
020-044	V.29 9600 bps Line1	FAX	FAX	Output			On/Off	Emits V.29 9600 bps Line1
020-045	V.17 7200 bps Line1	FAX	FAX	Output			On/Off	Emits V.17 7200 bps Line1
020-046	V.17 9600 bps Line1	FAX	FAX	Output			On/Off	Emits V.17 9600 bps Line1
020-047	V.17 12000 bps Line1	FAX	FAX	Output			On/Off	Emits V.17 12000 bps Line1
020-048	V.17 14400 bps Line1	FAX	FAX	Output			On/Off	Emits V.17 14400 bps Line1
020-049	V.34 2400 bps Line1	FAX	FAX	Output			On/Off	Emits V.34 2400 bps Line1
020-050	V.34 4800 bps Line1	FAX	FAX	Output			On/Off	Emits V.34 4800 bps Line1
020-051	V.34 7200 bps Line1	FAX	FAX	Output			On/Off	Emits V.34 7200 bps Line1
020-052	V-34 9600 bps Line1	FAX	FAX	Output			On/Off	Emits V-34 9600 bps Line1
020.053	V.34 12000 bps Line1	FAX	FAX	Output			On/Off	Emits V.34 12000 bps Line1
020-054	V.34 14400 bps Line1	FAX	FAX	Output			On/Off	Emits V.34 14400 bps Line1
020-055	V.34 16800 bps Line1	FAX	FAX	Output			On/Off	Emits V.34 16800 bps Line1
020-056	V.34 19200 bps Line1	FAX	FAX	Output			On/Off	Emits V.34 19200 bps Line1
020-057	V.34 21600 bps Line1	FAX	FAX	Output			On/Off	Emits V.34 21600 bps Line1
020-058	V.34 24000 bps Line1	FAX	FAX	Output			On/Off	Emits V.34 24000 bps Line1
020-059	V.34 26400 bps Line1	FAX	FAX	Output			On/Off	Emits V.34 26400 bps Line1
020-060	V.34 28800 bps Line1	FAX	FAX	Output			On/Off	Emits V.34 28800 bps Line1
020-061	V.34 31200 bps Line1	FAX	FAX	Output			On/Off	Emits V.34 31200 bps Line1
020-062	V.34 33600 bps Line1	FAX	FAX	Output			On/Off	Emits V.34 33600 bps Line1
020-080	Sngl Tone 0Hz Ln2	FAX	FAX	Output			On/Off	Emits single tone 0Hz on line 2
020-081	Sngl Tone 400Hz Ln2	FAX	FAX	Output			On/Off	Emits single tone 400Hz on line 2
020-082	Sngl Tone 1100Hz Ln2	FAX	FAX	Output			On/Off	Emits single tone 1100Hz on line 2
020-083	Sngl Tone 1300Hz Ln2	FAX	FAX	Output			On/Off	Emits single tone 1300Hz on line 2
020-084	Sngl Tone 1650Hz Ln2	FAX	FAX	Output			On/Off	Emits single tone 1650Hz on line 2
020-085	Sngl Tone 1850Hz Ln2	FAX	FAX	Output			On/Off	Emits single tone 1850Hz on line 2
020-086	Sngl Tone 2100Hz Ln2	FAX	FAX	Output			On/Off	Emits single tone 2100Hz on line 2
020-087	ANSAM Ln2	FAX	FAX	Output			On/Off	
020-088	CI Ln2	FAX	FAX	Output			On/Off	
020-090	DTMF # Line2	FAX	FAX	Output			On/Off	Emits DTMF # on line 2

Table 6 IOT FAX Chain 20 Component Control Codes

Chain Link	Component	Device	Module	Type	Conflicts	Timeout	Display	Description
020-091	DTMF * Line2	FAX	FAX	Output			On/Off	Emits DTMF * on line 2
020-092	DTMF 0 Line2	FAX	FAX	Output			On/Off	Emits DTMF 0 on line 2
020-093	DTMF 1 Line2	FAX	FAX	Output			On/Off	Emits DTMF 1 on line 2
020-094	DTMF 2 Line2	FAX	FAX	Output			On/Off	Emits DTMF 2 on line 2
020-095	DTMF 3 Line2	FAX	FAX	Output			On/Off	Emits DTMF 3 on line 2
020-096	DTMF 4 Line2	FAX	FAX	Output			On/Off	Emits DTMF 4 on line 2
020-097	DTMF 5 Line2	FAX	FAX	Output			On/Off	Emits DTMF 5 on line 2
020-098	DTMF 6 Line2	FAX	FAX	Output			On/Off	Emits DTMF 6 on line 2
020-099	DTMF 7 Line2	FAX	FAX	Output			On/Off	Emits DTMF 7 on line 2
020-100	DTMF 8 Line2	FAX	FAX	Output			On/Off	Emits DTMF 8 on line 2
020-101	DTMF 9 Line2	FAX	FAX	Output			On/Off	Emits DTMF 9 on line 2
020-102	DTMF A Line2	FAX	FAX	Output			On/Off	Emits DTMF A on line 2
020-103	DTMF B Line2	FAX	FAX	Output			On/Off	Emits DTMF B on line 2
020-104	DTMF C Line2	FAX	FAX	Output			On/Off	Emits DTMF C on line 2
020-105	DTMF D Line2	FAX	FAX	Output			On/Off	Emits DTMF D on line 2
020-110	V.21 300 bps Line2	FAX	FAX	Output			On/Off	Emits V.21 300 bps Line2
020-111	V.27ter 2400 bps Line2	FAX	FAX	Output			On/Off	Emits V.27ter 2400 bps Line2
020-112	V.27ter 4800 bps Line2	FAX	FAX	Output			On/Off	Emits V.27ter 4800 bps Line2
020-113	V.29 7200 bps Line2	FAX	FAX	Output			On/Off	Emits V.29 7200 bps Line2
020-114	V.29 9600 bps Line2	FAX	FAX	Output			On/Off	Emits V.29 9600 bps Line2
020-115	V.17 7200 bps Line2	FAX	FAX	Output			On/Off	Emits V.17 7200 bps Line2
020-116	V.17 9600 bps Line2	FAX	FAX	Output			On/Off	Emits V.17 9600 bps Line2
020-117	V.17 12000 bps Line2	FAX	FAX	Output			On/Off	Emits V.17 12000 bps Line2
020-118	V.17 14400 bps Line2	FAX	FAX	Output			On/Off	Emits V.17 14400 bps Line2
020-119	V.34 2400 bps Line2	FAX	FAX	Output			On/Off	Emits V.34 2400 bps Line2
020-120	V.34 4800 bps Line2	FAX	FAX	Output			On/Off	Emits V.34 4800 bps Line2
020-121	V.34 7200 bps Line2	FAX	FAX	Output			On/Off	Emits V.34 7200 bps Line2
020-122	V.34 9600 bps Line2	FAX	FAX	Output			On/Off	Emits V.34 9600 bps Line2
020-123	V.34 12000 bps Line2	FAX	FAX	Output			On/Off	Emits V.34 12000 bps Line2
020-124	V.34 14400 bps Line2	FAX	FAX	Output			On/Off	Emits V.34 14400 bps Line2
020-125	V.34 16800 bps Line2	FAX	FAX	Output			On/Off	Emits V.34 16800 bps Line2
020-126	V.34 19200 bps Line2	FAX	FAX	Output			On/Off	Emits V.34 19200 bps Line2
020-127	V.34 21600 bps Line2	FAX	FAX	Output			On/Off	Emits V.34 21600 bps Line2
020-128	V.34 24000 bps Line2	FAX	FAX	Output			On/Off	Emits V.34 24000 bps Line2
020-129	V.34 26400 bps Line2	FAX	FAX	Output			On/Off	Emits V.34 26400 bps Line2
020-130	V.34 28800 bps Line2	FAX	FAX	Output			On/Off	Emits V.34 28800 bps Line2
020-131	V.34 31200 bps Line2	FAX	FAX	Output			On/Off	Emits V.34 31200 bps Line2
020-132	V.34 33600 bps Line2	FAX	FAX	Output			On/Off	Emits V.34 33600 bps Line2

Table 7 IOT Drive/NOHAD Chain 42 Component Control Codes

Chain Link	Component	Device	Module	Type	Conflicts	Timeout	Display	Description
042-001	Main Motor 126mm/s	IOT	Drives	Output	042-002, 042-003		On/Off	
042-002	Main Motor 63mm/s	IOT	Drives	Output	042-001, 042-003		On/Off	
042-003	Drum Motor Reverse 63mm/s	IOT	Drives	Output	042-001, 042-002		On/Off	
042-004	Developer Motor 12mm/s	IOT	Drives	Output	042-005		On/Off	
042-005	Developer Motor 63mm/s	IOT	Drives	Output	042-004		On/Off	
042-006	Main Motor 255mm/s	IOT	Drives	Output	04-007 to 042-009, 042-011, 094-003,094-004		On/Off	
042-007	Main Motor 63mm/s	IOT	Drives	Output	042-006, 042-008 to 042-009, 042-011,094-003,094-004		On/Off	
042-008	Main Motor 126mm/s	IOT	Drives	Output	042-006, 042-007, 042-009, 042-011, 094-003, 094-004		On/Off	
042-009	Main Motor 63mm/s	IOT	Drives	Output	042-006, 042-007, 042-009, 042-011, 094-003, 094-004		On/Off	
042-010	K Developer Clutch	IOT	Drives	Output			On/Off	Actuate K Developer Clutch
042-011	Drum Clutch	IOT	Drives	Output	042-006 to 042-009, 042-011, 094-003, 094-004		On/Off	Actuate Drum Clutch
042-014	Fuser Exhaust Fan	IOT	NOHAD	Output			On/Off	
042-015	LVPS Intake Fan	IOT	NOHAD	Output			On/Off	
042-101	FC Drum Sensor	IOT	Drives	Input			High/Low	
042-102	K Drum Sensor	IOT	Drives	Input			High/Low	
042-103	Fuser Exhaust Fan Failure	IOT	NOHAD	Input			High/Lowf	
042-104	LVPS Rear Fan Failure	IOT	NOHAD	Input			High/Low	

Table 8 IIT Scanner Chain 62 Component Control Codes

Chain Link	Component	Device	Module	Type	Conflicts	Timeout	Display	Description
062-002	IIT Exposure Lamp	IIT	Scanner	Output		300 sec	On/Off	Can stop before time out time-
062-018	Carriage Home Sensor	IIT	Scanner	Input		None	High/Low	High = Carriage Home
062-019	Platen Down Sensor	IIT	Scanner	Input		None	High/Low	High =Platen Down
062-020	24V Detect	IIT	Scanner	Input		None	High/Low	Detects 24V
062-022	DADH Hotline Detect	IIT	Scanner	Input	Can stack with DADH Active Hot-line	None	High/Low	High = Hotline Active
062-023	Carriage Move Home	IIT	Scanner	Output	Can only be run independently of other Carriage Move components	None	On/Off	Moves carriage to the home position
062-024	Carriage Mv Doc Size	IIT	Scanner	Output	Can only be run independently of other Carriage Move components	None	On/Off	Moves Carriage to Document Size sensing position
062-025	Carriage Mv CVT	IIT	Scanner	Output	Can only be run independently of other Carriage Move components	None	On/Off	Moves Carriage to CVT position
062-026	Carriage Mv A Position	IIT	Scanner	Output	Can only be run independently of other Carriage Move components	None	On/Off	Moves Carriage to scan audit position A
062-027	Carriage Mv B Position	IIT	Scanner	Output	Can only be run independently of other Carriage Move components	None	On/Off	Moves Carriage to scan audit position B

Table 8 IIT Scanner Chain 62 Component Control Codes

Chain Link	Component	Device	Module	Type	Conflicts	Timeout	Display	Description
062-028	Carriage Mv C Position	IIT	Scanner	Output	Can only be run independently of other Carriage Move components	None	On/Off	Moves Carriage to scan audit position C
062-030	Carriage Mv Cal Strip Position	IIT	Scanner	Output	Can only be run independently of other Carriage Move components	None	On/Off	Moves Carriage to cal strip position
062-240	DADF Exist	IIT	Scanner	Input		None	High/Low	DADF detectr
062-251	Document Size Sensor 1	IIT	Scanner	Input		None	High/Low	High = Paper
062-253	Document Size Sensor 2	IIT	Scanner	Input		None	High/Low	High = Paper
062-301	Angle sensor	IIT	Scanner	Input		None	High/Low	Angle sensor

Table 9 Tray 1 Chain 71 Component Control Codes

Chain Link	Component	Device	Module	Type	Conflicts	Timeout	Display	Description
071-001	#1 Feed Motor (CW2) feed direction	IOT	Media	Output	071-002 thru 071-004	None	On/Off	Motor rotates with 2-phase excitation in feed direction at feed speed. If, however, rotation speed is specified by NVM, motor rotates at the specified speed.
071-003	#1 Feed Motor (CW1-2) feed direction	IOT	Media	Output	071-001, 071-002, 071-004	None	On/Off	Motor rotates with 2-phase excitation in feed direction at feed speed. If, however, rotation speed is specified by NVM, motor rotates at the specified speed.
071-004	#1 Feed Motor (CCW1-2) lift up direction	IOT	Media	Output	071-002 thru 071-003	None	On/Off	Motor rotates with 2-phase excitation in lift-up direction at lift-up speed. If, however, rotation speed is specified by NVM, motor rotates at the specified speed." Constraints. Motor does not rotate if Level Sensor is already on at the time of rotation start. When Level Sensor On is detected, motor steps down up to 0pps and stops.
071-101	#1 No Paper Sensor	IOT	Media	Input		None	High/Low	
071-102	#1 Level Sensor	IOT	Media	Input		None	High/Low	
071-104	#1 Tray Paper Size Switch	IOT	Media	Input		None	High/Low	T Size digit

Table 10 Tray 2 Chain 72 Component Control Codes

Chain Link	Component	Device	Module	Type	Conflicts	Timeout	Display	Description
072-001	#2 Feed Motor (CW2) feed direction	IOT	Media	Output	072-002, 072-003, 072-004	None	On/Off	Motor rotates with 2-phase excitation in feed direction at feed speed. If, however, rotation speed is specified by NVM, motor rotates at the specified speed.
072-002	#2 Feed Motor (CCW2) lift up direction	IOT	Media	Output	072-001, 072-003, 072-004	None	On/Off	Motor rotates with 2-phase excitation in lift-up direction at lift-up speed. If, however, rotation speed is specified by NVM, motor rotates at the specified speed. Constraints. Motor does not rotate if Level Sensor is already on at the time of rotation start. When Level Sensor On is detected, motor steps down up to 0pps and stops.
072-003	#2 Feed Motor (CW1-2) feed direction	IOT	Media	Output	072-001, 072-002, 072-004	None	On/Off	Motor rotates with 2-phase excitation in feed direction at feed speed. If, however, rotation speed is specified by NVM, motor rotates at the specified speed.

Table 10 Tray 2 Chain 72 Component Control Codes

Chain Link	Component	Device	Module	Type	Conflicts	Timeout	Display	Description
072-004	#2 Feed Motor (CCW1-2) lift up direction	IOT	Media	Output	072-001, 072-002, 072-003	None	On/Off	Motor rotates with 2-phase excitation in lift-up direction at lift-up speed. If, however, rotation speed is specified by NVM, motor rotates at the specified speed." Constraints. Motor does not rotate if Level Sensor is already on at the time of rotation start. When Level Sensor On is detected, motor steps down up to 0pps and stops.
072-101	#2 No Paper Sensor	IOT	Media	Input	072-102 thru 072-104, 073-101 thru 073-104, 074-101 thru 074-104, 077-036	None	High/Low	
072-102	#2 Level Sensor	IOT	Media	Input	072-101, 072-103 thru 072-104, 073-101 thru 073-104, 074-101 thru 074-104, 077-036	None	High/Low	
072-103	#2 Feed Out Sensor	IOT	Media	Input	072-101, 072-102, 072-104, 073-101 thru 073-104, 074-101 thru 074-104, 077-036	None	High/Low	
072-104	#2 Tray Paper Size Switch	IOT	Media	Input	072-101 thru 072-103, 073-101 thru 073-104, 074-101 thru 074-104, 077-036	None	High/Low	T size digit

Table 11 Tray 3 Chain 73 Component Control Codes

Chain Link	Component	Device	Module	Type	Conflicts	Timeout	Display	Description
073-001	#3 Feed Motor (CW2) feed direction	IOT	Media	Output	073-002 thru 073-004	None	On/Off	Motor rotates with 2-phase excitation in feed direction at feed speed. If, however, rotation speed is specified by NVM, motor rotates at the specified speed.
073-002	#3 Feed Motor (CCW2) lift up direction	IOT	Media	Output	073-001, 073-003, 073-004	None	On/Off	Motor rotates with 2-phase excitation in lift-up direction at lift-up speed. If, however, rotation speed is specified by NVM, motor rotates at the specified speed." Constraints. Motor does not rotate if Level Sensor is already on at the time of rotation start. When Level Sensor On is detected, motor steps down up to 0pps and stops.
073-003	#3 Feed Motor (CW1-2) feed direction	IOT	Media	Output	073-001, 073-002, 073-004	None	On/Off	Motor rotates with 2-phase excitation in feed direction at feed speed. If, however, rotation speed is specified by NVM, motor rotates at the specified speed.
073-004	#3 Feed Motor (CCW1-2) lift up direction	IOT	Media	Output	073-001, 073-002, 073-003	None	On/Off	Motor rotates with 2-phase excitation in lift-up direction at lift-up speed. If, however, rotation speed is specified by NVM, motor rotates at the specified speed." Constraints. Motor does not rotate if Level Sensor is already on at the time of rotation start. When Level Sensor On is detected, motor steps down up to 0pps and stops.
073-101	#3 No Paper Sensor	IOT	Media	Input	072-101 thru 072-104, 073-102 thru 073-104, 074-101 thru 073-104, 077-036	None	High/Low	

Table 11 Tray 3 Chain 73 Component Control Codes

Chain Link	Component	Device	Module	Type	Conflicts	Timeout	Display	Description
073-102	#3 Level Sensor	IOT	Media	Input	072-101 thru 072-104, 073-101, 073-103 thru 073-104, 074-101 thru 073-104, 077-036	None	High/Low	
073-103	#3 Feed Out Sensor	IOT	Media	Input	072-101 thru 072-104, 073-101, 073-102, 073-104, 074-101 thru 073-104, 077-036	None	High/Low	
073-104	#3 Tray Paper Size Switch	IOT	Media	Input	072-101 thru 072-104, 073-101 thru 073-104, 074-101 thru 073-104, 077-036	None	High/Low	

Table 12 Tray 4 Chain 74 Component Control Codes

Chain Link	Component	Device	Module	Type	Conflicts	Timeout	Display	Description
074-001	#4 Feed Motor (CW2) feed direction	IOT	Media	Output	074-002 thr 074-004	None	On/Off	Motor rotates with 2-phase excitation in feed direction at feed speed. If, however, rotation speed is specified by NVM, motor rotates at the specified speed.
074-002	#4 Feed Motor (CCW2) lift up direction	IOT	Media	Output	074-001, 074-003, 074-004	None	On/Off	Motor rotates with 2-phase excitation in lift-up direction at lift-up speed. If, however, rotation speed is specified by NVM, motor rotates at the specified speed." Constraints. Motor does not rotate if Level Sensor is already on at the time of rotation start. When Level Sensor On is detected, motor steps down up to 0pps and stops.
074-003	#4 Feed Motor (CW1-2) feed direction	IOT	Media	Output	074-001, 074-002, 074-004	None	On/Off	Motor rotates with 2-phase excitation in feed direction at feed speed. If, however, rotation speed is specified by NVM, motor rotates at the specified speed.
074-004	#4 Feed Motor (CCW1-2) lift up direction	IOT	Media	Output	074-001 thr 074-003	None	On/Off	Motor rotates with 2-phase excitation in lift-up direction at lift-up speed. If, however, rotation speed is specified by NVM, motor rotates at the specified speed." Constraints. Motor does not rotate if Level Sensor is already on at the time of rotation start. When Level Sensor On is detected, motor steps down up to 0pps and stops.
074-101	#4 No Paper Sensor	IOT	Media	Input	072-101 thru 072-104, 073-101 thru 073-104, 074-102 thru 073-104, 077-036	None	High/Low	
074-102	#4 Level Sensor	IOT	Media	Input	072-101 thru 072-104, 073-101 thru 073-104, 074-101, 074-103, 073-104, 077-036	None	High/Low	
074-103	#4 Feed Out Sensor	IOT	Media	Input	072-101 thru 072-104, 073-101 thru 073-104, 074-101, 074-102, 073-104, 077-036	None	High/Low	
074-104	#4 Tray Paper Size Switch	IOT	Media	Input	072-101 thru 072-104, 073-101 thru 073-104, 074-101, 074-102, 073-103, 077-036	None	High/Low	

Table 13 Tray 5 Bypass Chain 75 Component Control Codes

Chain Link	Component	Device	Module	Type	Conflicts	Timeout	Display	Description
075-001	MSI Feed Motor 2 phase CW2 Feed	IOT	Media	Input		None	High/Low	
075-100	MSI No Paper Sensor	IOT	Media	Input		None	High/Low	

Table 14 IOT Media Path Chain 77 Component Control Codes

Chain Link	Component	Device	Module	Type	Conflicts	Timeout	Display	Description
077-001	Take away Clutch	IOT	Media	Output		None	On/Off	Turn on Take Away Clutch I/OTA Clutch (Doubled as TA Clutch for MSI). Component Able to drive with #1 Take Away Roll or MSI Take Away Roll by combining with Main Drive Moror 042-XXX.
077-002	Regi Clutch	IOT	Media	Output		None	On/Off	Turn on Regi Clutch I/OTA Clutch (Doubled as TA Clutch for MSI), Componet able to drive with Regi Roll by combining with Main Drive Moror 042-XXX-
077-003	Duplex Clutch	IOT	Media	Output		None	On/Off	
077-004	Exit Gate Solenoid	IOT	Media	Output		None	On/Off	Exit Gate Switching Heavy current for 110mm/sec after paper pulling start, then change to low current Off: output to Exit 1 On: output to Exit 2 I/O Exit Gate Solenoid.
077-005	Face Up Gate Solenoid	IOT	Media	Output		None	On/Off	Exit Up Gate Switching Heavy current for 110mm/sec after paper pulling start, then change to low current Off: output to Exit 2 On: output to Face Up Tray I/O Face Up Gate Solenoid.
077-010	#1 OCT Motor CW 2 phase excitation	IOT	Media	Output	077-011 to 077-013	None	On/Off	In SM but not BSD's
077-011	#1 OCT Motor CCW 2 phase excitation	IOT	Media	Output	077-010, 077-012, 077-013	None	On/Off	
077-012	#1 OCT Motor CW1-2 Mode	IOT	Media	Output	077-010, 077-011, 077-013	None	On/Off	
077-013	#1 OCT Motor CCW1-2 Mode	IOT	Media	Output	077-010, 077-011, 077-012	None	On/Off	
077-014	Exit2 Drive Motor at 63mm/s	IOT	Media	Output	077-015, 077-016, 077-017	None	On/Off	
077-015	Exit2 Drive Motor at 126mm/s	IOT	Media	Output	077-014, 077-016, 077-017	None	On/Off	
077-016	Exit2 Drive Motor at 63mm/s MAX	IOT	Media	Output	077-014, 077-015, 077-017	None	On/Off	
077-017	Exit2 Drive Motor at 126mm/s MAX	IOT	Media	Output	077-014, 077-015, 077-016	None	On/Off	
077-030	TM T/A Clutch	IOT	Media	Output		None	On/Off	
077-031	IOT Regi Stop	IOT	Media	Output		None	On/Off	
077-032	IOT Feed On Signal	IOT	Media	Output		None	On/Off	
077-033	TM T/A Motor Full Speed	IOT	Media	Output		None	On/Off	
077-034	TM T/A Motor1 Half Speed	IOT	Media	Output		None	On/Off	
077-100	#2 Exit Sensor	IOT	Media	Input		None	High/Low	
077-101	#1 Exit Sensor	IOT	Media	Input		None	High/Low	
077-102	#1 OCT Home Position Sensor	IOT	Media	Input		None	High/Low	
077-103	POB Sensor	IOT	Media	Input		None	High/Low	
077-104	Regi sensor	IOT	Media	Input		None	High/Low	
077-105	Duplex Path sensor	IOT	Media	Input		None	High/Low	

Table 14 IOT Media Path Chain 77 Component Control Codes

Chain Link	Component	Device	Module	Type	Conflicts	Timeout	Display	Description
077-113	#3 Feed Out Sensor	IOT	Media	Input		None	High/Low	
077-114	#4 Feed Out Sensor	IOT	Media	Input		None	High/Low	
077-120	IOT Feed Ready Signal	IOT	Media	Input		None	High/Low	Feed Ready Signal OFF/On Detection
077-121	TM Regi Stop Signal	IOT	Media	Input	072-101 thru 072-104, 073-101 thru 073-104, 074-101 thru 073-104	None	High/Low	Regi Stop Signal OFF/On Detection
077-123	TM Feed On Signal	IOT	Media	Input	072-101 thru 072-104, 073-101 thru 073-104, 074-101 thru 073-104, 077-036	None	High/Low	Feed On Signal OFF/On Detection
077-201	Face Up Tray Detect Switch	IOT	Media	Input		None	High/Low	
077-300	Left Hand Cover Interlock switch	IOT	Media	Input		None	High/Low	
077-301	Left Hand Low Cover Switch	IOT	Media	Input		None	High/Low	
077-302	Left Hand High Cover Switch	IOT	Media	Input		None	High/Low	
077-303	Front Interlock Switch	IOT	Media	Input		None	High/Low	
077-305	Duplex Cover Switch	IOT	Media	Input		None	High/Low	
077-306	TM Left Hand Interlock switch	IOT	Media	Input		None	High/Low	

Table 15 TMA LED Chain 89 Component Control Codes

Chain Link	Component	Device	Module	Type	Conflicts	Timeout	Display	Description
089-001	TMA LED On/Off	IOT	Xerographic	Output	092-001, 092-002	None	On/Off	

Table 16 IOT Xerographics Chain 91 Component Control Codes

Chain Link	Component	Device	Module	Type	Conflicts	Timeout	Display	Description
091-001	BCR DC Y	IOT	Xerographic	Output		None	On/Off	
091-002	BCR DC M	IOT	Xerographic	Output		None	On/Off	
091-003	BCR DC C	IOT	Xerographic	Output		None	On/Off	
091-004	BCR DC K	IOT	Xerographic	Output		None	On/Off	
091-005	Erase Lamp YMC	IOT	Xerographic	Output		None	On/Off	
091-006	Erase Lamp K	IOT	Xerographic	Output		None	On/Off	
091-007	Erase Lamp YMCK	IOT	Xerographic	Output		None	On/Off	
091-100	Waste Bottle Position SNR	IOT	Xerographic	Input		None	High/Low	
091-101	Waste Bottle Full SNR	IOT	Xerographic	Input		None	High/Low	

Table 17 IOT TMA Chain 92 Component Control Codes

Chain Link	Component	Device	Module	Type	Conflicts	Timeout	Display	Description
092-001	TMA LED Front	IOT	Develop	Output		None	On/Off	Turn On the TMA Mirror LED.
092-002	TMA LED Rear	IOT	Develop	Output		None	On/Off	Turn On the TMA Diffusion LED.

Table 17 IOT TMA Chain 92 Component Control Codes

Chain Link	Component	Device	Module	Type	Conflicts	Timeout	Display	Description
092-003	TMA shutter open	IOT	Xerographic	Output		100 msec	On/Off	**CAUTION** **After executing this test, close the ADC Shutter with 092-004. Otherwise, the ADC Sensor may be contaminated.** TMA shutter is automatically closed when printing.
092-004	TMA shutter close	IOT	Xerographic	Output		100 msec	On/Off	Use this code to close the TMA Shutter.

Table 18 IOT Developer Drive Chain 93 Component Control Codes

Chain Link	Component	Device	Module	Type	Conflicts	Timeout	Display	Description
093-001	Toner motor Y	IOT	Develop	Output	093-002	10 sec	On/Off	
093-002	Toner motor M	IOT	Develop	Output	093-001	10 sec	On/Off	
093-003	Toner motor C	IOT	Develop	Output	093-004	10 sec	On/Off	
093-004	Toner motor K	IOT	Develop	Output	093-003	10 sec	On/Off	
093-005	Developer Bias DC Minus YMC	IOT	Develop	Output			On/Off	
093-006	Developer Bias DC Minus K	IOT	Develop	Output			On/Off	
093-007	Developer Bias AC Minus YMC	IOT	Develop	Output			On/Off	
093-008	Developer Bias AC Minus K	IOT	Develop	Output			On/Off	

Table 19 IOT Transfer Belt Component Control Codes

Chain Link	Component	Device	Module	Type	Conflicts	Timeout	Display	Description
094-001	2nd BTR (-)	IOT	Develop	Output	094-002	None	On/Off	2nd BTR negative Bias Output.
094-002	2nd BTR (+)	IOT	Develop	Output	094-001	None	On/Off	2nd BTR positive Bias Output.
094-003	1st BTR YMC contact	IOT	Develop	Output	094-004,042-006 to 042-009, 042-011	None	On/Off	Automatically stops at contact position detected by 2nd BTR retract sensor.
094-004	1st BTR YMC retract	IOT	Develop	Output	094-003,042-006 to 042-009, 042-011	None	On/Off	Automatically stops at contact position detected by 2nd BTR retract sensor.
094-005	Ist BTR Y	IOT	Develop	Output		None	On/Off	
094-006	Ist BTR M	IOT	Develop	Output		None	On/Off	
094-007	1st BTR C	IOT	Develop	Input		None	High/Low	
094-008	1st BTR K	IOT	Develop	input		None	High/Low	

dC361 NVM Save and Restore

Purpose

Provides a method to capture the state of NVM to a file and write NVM file back to the NVM device when desired.

Procedure

1. Enter the UI Diagnostic (CSE) Mode.
2. Select the **Adjustments** tab.
3. Select **dc361 NVM Save and Restore**. The dc361 NVM Save and Restore window opens (Figure 1)

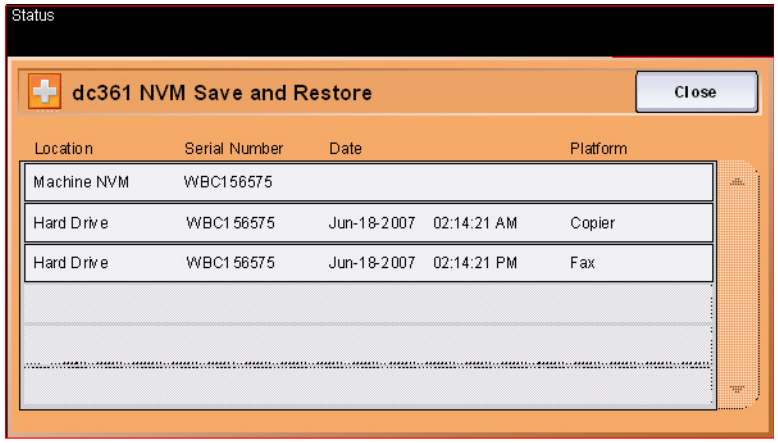

Figure 1 dc361 NVM Save and Restore

   The top line represents the data stored in the various NVM PWBs and chips in the machine.

4. To save NVM:
   a. Connect your USB Flash Drive to one of the USB ports on the machine
   b. Touch the **Machine NVM** line. A popup menu will open. Select **Save to Hard Drive**.
   c. New line(s) will be added to the screen.

NOTE: *Always save NVM data to the USB Device if you are going to perform an AltBoot; that procedure will delete all data from the Hard Drive*

   d. Touch the **Hard Drive** line. A popup menu will open. Select **Copy to USB Device**.
5. To restore NVM:
   a. Touch the **USB Device** line. A popup menu will open. Select **Copy to Hard Drive**.
   b. Touch the **Hard Drive** line. A popup menu will open. Select **Restore Machine NVM.**

dC608 Document Feeder Registration

Purpose

This feature checks registration of media fed through the ADF and corrects any misalignments. The process runs automatically and does not require any user intervention other than inserting three blank sheets in the document feeder.

Procedure

1. Enter UI Diagnostic (CSE) Mode.
2. Select the **Adjustments** tab.
3. Select **dC608 Document Feeder Registration**.
   The screen displays the current registration values
4. Insert 3 blank A4 (or 8.5 x 11 inch) white sheets, any orientation, into the document feeder.
5. Ensure the document feeder guides are correctly adjusted.
6. Select **Start**.
   The document feeder feeds the documents.
   The screen displays the values for before and after registration.
7. Select **Close** to exit the routine.
8. Select **Call Closeout** to exit service mode

dC609 Document Glass Registration

Purpose

This feature checks the registration of the document glass and corrects any misalignments. The process runs automatically and does not require any user intervention other than keeping the document feeder open during the operation.

Procedure

1. Enter UI Diagnostic (CSE) Mode.
2. Select the **Adjustments** tab.
3. Select **dC609 Document Glass Registration**.
   The screen displays the current registration values.
4. Open the document feeder and remove any paper from the document glass.

   NOTE: *The document feeder should remain open until this procedure is complete.*

5. Select **Start** to run the routine.
   The screen displays the values for before and after registration.
6. Select **Close** to exit the routine.
7. Select **Call Closeout** to exit service mode

dC612 Test Pattern Print

Purpose

Outputs the built-in test patterns, to help identify Image Quality problems.

Procedure

1. Enter UI Diagnostic (CSE) Mode.
2. Select the **Diagnostics** tab.
3. Select **dC 612 Print Test Pattern.**
4. Select a pattern from the **Test Patterns** menu.

NOTE: *Not all of the following parameters are applicable to all test patterns; and some test patterns require a specific set of parameters. Refer to Table 1.*

5. Select the **Color Mode**.
6. Select the paper **Tray** to be used.

   NOTE: *If you open the paper tray to change size, but do not get a "Confirm paper tray status" screen on the UI, you must exit diagnostics in order to confirm the change. Reenter diagnostics and continue with the procedure.*

7. From the **Plex Mode** drop-down menu, select simplex or duplex.
8. Select the number of **Copies** (prints) to be made.
9. Select **Start**.

Table 1 Test Patterns

#	Description	Purpose	Media	Colors
1	90 Degree Print (90 Degree Grid)	Alignment measurement. Used for dc129 Image Registration.	11x17/A3	4C
3	A1 Patch Pattern	Inspect registration control A1 Patch	11x17/A3	4C
4	B Patch Pattern	Inspect registration control B Patch	11x17/A3	4C
5	C Patch Pattern	Inspect registration control C Patch	LTR/A4 SEF	4C
11	Full Halftone	Inspect of image defects	LTR/A4 LEF	K, cyan, magenta, yellow

dC640 Video Path Tests

Purpose

Provides a method to test EPC memory, video path integrity, and SBC <-> CCs communication on the SBC PWB.

Procedure

1. Enter the UI Diagnostic (CSE) Mode.
2. Select **Diagnostics** tab .
3. Select **dc640 Video Path Integrity...**
4. Select **Start**. For any failure, replace the SBC PWB.

dC671 Measurement Cycle

Purpose

This procedure checks and adjusts color registration.

- Performs measurement to determine the condition of the registration control.
- Checks that the Belt control etc. are operating normally.
- Measures/displays the amount of color shift relative to Black in the Fast Scan/Slow Scan direction.
- Displays the results as either **OK** or **NG**

For instructions, refer to ADJ 9.8.

dC673 RegiCon Control Sensor Check Cycle

Purpose

This is a self-diagnostic cycle for checking that the registration detection system is operating normally. Color shift is detected using a Cyan patch. Any misregistration detected in the MOB sensor is displayed on the UI screen. This result is compared with the target value to determine the **OK** or **NG** status. Correction is not performed.

For instructions, refer to ADJ 9.11.

dC675 RegiCon Setup Cycle Control

Purpose

This is a setup procedure to be used after replacement of the ROS, the Transfer Belt, or the IBT Assembly

For instructions, refer to ADJ 9.9.

dC710 No Paper Run

Purpose

This routine operates all of the media feed and transport functions without actually feeding media, to enable examination of the subsystem operation.

NOTE: *Even though no paper is fed, Tray 1 must be loaded with 8.5 x 11 or A4 paper in order to run this routine.*

If you open the paper tray to change size, but do not get a "Confirm paper tray status" screen on the UI, you must exit diagnostics in order to confirm the change. Reenter diagnostics and continue with the procedure.

Procedure

1. Enter the **Diagnostic Mode**. Refer to UI Diagnostic (CSE) Mode.
2. Select the **Maintenance** tab.
3. Select the **Paper Path** tab (not in UI Diagnostics).
4. Select **No Paper Run (dC710)**.
5. Select Color Mode (Color or Fast Black).
6. Enter the number (1 - 99) of simulated print cycles you wish to run. Select **Start** to activate.
7. Select Stop to immediately halt the Routine.

dC740 Tray 5 MSI Side Guide Adjustment

Purpose

This procedure calibrates the paper size detection circuits for Tray 5.

Refer to ADJ 7.1 for instructions

dC909 Calibrate for Paper

Purpose

Calibrate for Paper Type provides adjusts the 2nd Image Transfer Power output (ATVC) to compensate for thick or specialty media. Use dC909 to correct these types of defects on simplex and duplex prints:

- Low density
- Foggy background
- Voids
- White spots

Table 1 Relationship Between UI Classification and Paper Type (Factory Settings)

UI Classification	Paper Type
Plain	Plain B
Hole Punched	
Transparency	
Precut Tab	
Light Card	
Light Card RL (reload)	
Cardstock	
Card Reload	
Recycled	
Labels	
LW (light weight) Glossy Card	
LW Glossy Card R (reload)	
Glossy Card	
Glossy Card RL (reload)	
Letterhead	
Pre-Printed	
Bond	Plain
Heavy Labels	
Envelope	
Custom 1~7	User Defined
Other Type	
HW (heavy weight) Glosss Card	
HWGloss Card R (reload)	
X-HW (extra heavy weight) Labels	
Heavy Card	
HW Card R (reload)	
Postcard	

Procedure

1. Load the paper to be adjusted into the paper tray (11x17 is recommended) and change the "Paper Type Settings" to match the paper.
2. Enter the UI Diagnostic (CSE) Mode.
3. Select the **Adjustments** tab.
4. Select **dc909 Calibrate for Paper**. The Calibrate for Paper Adjustment screen will be displayed.
5. Select **[Paper Supply]** and select the tray containing the paper to be adjusted.
6. Select **[Paper Type]** and select the paper type that was set in Step 1.
7. Select **Test Print** to output the Test Pattern (Figure 1).

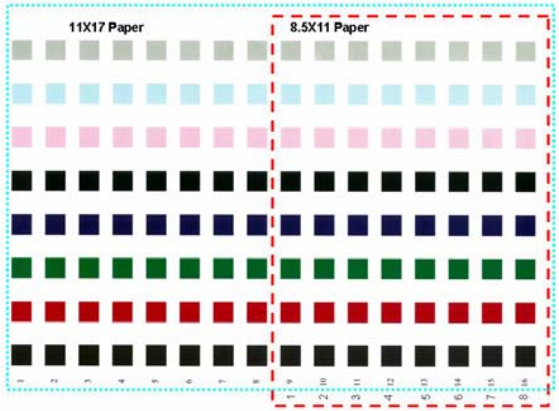

Figure 1 Test Pattern

NOTE: *The Test Pattern is meant to be printed on 11x17"/A3 paper; portions of the pattern may be missing when printed on other sizes. LTR/ A4 LEF only shows the latter half of the pattern; although the patch number at the paper lead edge is "9", the transfer output will be printed as "1".*

8. Select what you would consider as the best value from the columns (1~16) on the Test Pattern. The selection criteria are:
   a. Whether there are any white spots in the K color patch (if there are, it indicates excessive voltage)
   b. Whether the mixed K looks bluish (if it is, it indicates insufficient voltage)
   c. Whether the halftone granularity is good (if it is bad, it indicates excessive voltage)
9. Select **[Type Offset]**, **Up** or **Down** buttons to raise or lower 2nd Transfer Voltage.
10. Select **Write NVM**.
11. Select **Test Print**. Verify that the desired outcome is achieved. If desired outcome is not achieved, repeat this procedure. If desired outcome is achieved, continue to step 12.
12. Select **Close** to end.

dC919 Color Balance Adjustment

Purpose

This procedure allows fine adjustment of the center value of the low density/medium density/ high density output balance for each color for copy images.

Refer to ADJ 9.6 for instructions.

dC924 TRC Manual Adjustment

Purpose

This procedure allows you to perform a manual density adjustment. It sets an offset amount of the ADC-LUT created by the ADC patch to finely adjust the gradation.

Refer to ADJ 9.5 for instructions.

dC940 ProCon On/Off Print

Purpose

This procedure prints out the Process Control Test Pattern in two different modes. The comparison between the two prints can help isolate process control-related image quality problems.

Refer to ADJ 9.7 for instructions.

dC945 IIT Calibration

Purpose

This procedure sets the following:.

- White Reference Correction Coefficient.
- IIT sensitivity dispersion (CCD Calibration).
- Platen-to-Lens-to-CCD alignment (Optical Axis)

Refer to ADJ 6.5 and ADJ 6.6 for instructions.

dC949 ATC Developer Setup

Purpose

Immediately after the replacement of a Developer Housing with known toner density, this sets the ATC Target Value by having the ATC Sensor measure the toner density of the developer. This can also work as the check function of the ATC Sensor.

Refer to ADJ 9.3 for instructions.

dC991 Tone Up/Tone Down

Purpose

This procedure compares measured toner concentration against a target, and allows manual adjustment of TC.

Refer to ADJ 9.4 for instructions.

dC1202 Hole Position Adjustment

Purpose

dc1202 Punch Position Adjust is used to align the hole punch position. After installation of the Punch Assembly into the LX finisher and subsequent power On, a configuration prompt appears on the UI for hole punch adjustment. This routine is typically performmed by the customer in administrator mode.

NOTE: *The distance between each hole punch in the cross process direction, on the same page, is not adjustable.*

Refer to ADJ 12.1 for instructions.

GP 1 FAX PWB Internal Selftest

Procedure

1. Insert a document in the DADF or place on the glass
2. Select the **Fax** feature from the **All Features** screen on the UI.
3. Enter 0000 as the phone number
4. Select **Start**. The machine will scan the document.
5. The scanned image(s) will be received by the Fax PWB from the SBC PWB. The Fax PWB sends it back to the SBC PWB which sends it to the IOT to print the scanned image.

This is a closed loop test. It does not check the phone line. It does prove that the image path in the machine is working correctly. You should end up with a copy of the scanned document with a fax header on the top of the page. It also will print a transmission report if this feature is enabled in Tools.

For additional Fax testing, refer to GP 14.

GP 2 Accessing Tools

The Tools menu has three levels of access: User (walk-up), Administrator and CSE. User mode offers copy and print color calibration adjustments; Administrator mode offers a more comprehensive suite of options and CSE mode offers a subset of Administrator options. CSE mode is available if the Administrator user name and passcode are not at the default, and the Administrator is not available to enter the code.

Accessing Tools as Administrator

1. Press the **Log in/out** button on the UI.
2. Enter the administrator User Name (default is **admin**) and select **Next**.
3. Enter the Administrator passcode (default is **1111**) and select Done. The Log In/Out button is illuminated and Admin appears in the upper right corner of the screen.

   NOTE: *Administrator mode remains active until the* ***Log in/out*** *button is pressed or the session times out. When finished, always log out of Administrator mode by pressing the* ***Log in/out*** *button and confirming logout.*

4. Press the **Machine Status** button on the UI.
5. Select the **Tools** tab. The Tools menu appears.

   On the left side of the screen are several buttons for the categories of features.

   Within each category are **Groups** of features. Each **Group** contains one or more **Features**.
6. Select the category, then the group, then the feature.

Accessing Tools as CSE

If administrator credentials are unknown, log in as a CSE.

1. Press and hold the **0** button for approximately 10 seconds then simultaneously press the **Start** button on the UI. Release both buttons after a few seconds.
2. On the Service Diagnostics Login screen, enter **2732**, then select **Enter**. The Log in/out button is illuminated and CSE appears in the upper right corner of the screen.

   NOTE: *CSE mode remains active until the* ***Log in/out*** *button is pressed or the session times out. When finished, always log out of CSE mode by pressing the* ***Log in/out*** *button and confirming logout.*

3. Press the **Machine Status** button on the UI.
4. Select the **Tools** tab. The Tools menu appears.

   On the left side of the screen are several buttons for the categories of features.

   Within each category are **Groups** of features. Each **Group** contains one or more **Features**.
5. Select the category, then the group, then the feature.

   NOTE: *The Tools available in CSE mode are a subset of those available in Administrator mode.*

GP 3 Controller Boot Sequence

Sequence

The on-screen indications of a normal bootup are:

- Switch on the power. The Flash screen appears within 10 seconds
- At approximately 45 seconds you should see the XUI start up screen
- At approximately 55 seconds, you will hear the trays initialize.
- At approximately 75 seconds, the Model Information screen appears.
- At approximately 120 seconds, the Configuration Report will print (if enabled).
- Approximate total boot time = 140 seconds for basic services. (2 min. 20 seconds)

NOTE: *Additional installed services (like EFAX, E-mail) require additional pre-loading time (approximately 30 seconds)*

GP 5 Image Quality Calibration

This procedure details the method by which customers can either restore print and copy image calibration to factory settings, or recalibrate Image Quality in either Print or Copy mode.

Procedure

NOTE: *It is not necessary to enter SA mode (log in) in order to perform this procedure.*

1. Press the **Machine Status** button on the UI.
2. Select the **Tools** tab.
3. Select **Troubleshooting**.
4. In the **Troubleshooting** Group, select **Calibration**.
5. Select **Reset Copy Calibration** or **Reset Print Calibration** to restore factory default settings, or select **Copy Calibration** or **Print Calibration** to start the calibration routine.
6. The steps to perform the calibration procedure are displayed on the UI; follow the instructions exactly.

GP 6 Printing Configuration Reports

Purpose

This procedure describes the procedure for accessing Configuration Reports.

Procedure

A Configuration Report can be produced in three ways:

1. Switching power off then on (if configured)
2. Through use of Centreware® Internet Services.
3. From the local UI:

   NOTE: *It is not necessary to enter SA mode (log in) in order to perform this procedure.*

   - Press the **Machine Status** button on the UI.
   - Select **Information Pages on the right side of the screen.**
   - Select **Configuration Report** and press the **Print** button.

GP 7 Network Printing Simulation

Purpose

This procedure details a method of troubleshooting network printing problems using a PC connected to the printer with a network crossover cable.

Depending on your operating system, follow one of the two network connection procedures provided:

- Windows XP Connection
- Windows 7 Connection

Prerequisites

- Crossover cable and a PWS equipped with a network interface card.
- Clear Internet Explorer proxy settings.
- User software CD or driver files downloaded and extracted to a folder on the PWS.

Clear IE Proxy Settings

The following steps will ensure that the Proxy Server Settings are correct.

1. Open **Internet Explorer.**
2. Select **Tools - Internet Options**.
3. Select the **Connections** Tab.
4. Select the **LAN Settings** box.
5. Ensure that the “Use a proxy server for your LAN” box is **un-checked**.
6. Select **OK** to close the **Local Area Network Settings** window.
7. Select **OK** to close the **Internet Options window**.
8. Close **Windows Internet Explorer**.

Windows XP Connection Procedure

1. Print a Configuration Report. Refer to GP 6.
2. Configure the PWS IP Address:
   a. Right click on the **My Network Places** icon.
   b. Select **Properties** to bring up the Network and Dial-up Connections window.
   c. Right click on **Local Area Connection** and select **Properties**.
   d. Select the **General** tab and scroll down to Internet Protocol (TCP/IP). Highlight **TCP/IP** and select **Properties**.
   e. Select the **Use the following IP address** radio button.
   f. Enter an **IP address** one digit different than the printer’s IP address listed on the Configuration Report (ex., if the machine IP address is 12.138.147.44, enter 12.138.147.45 or 12.138.147.43).
   g. Enter **255.255.255.0** for Subnet mask.
3. Connect the PWS to the printer with the crossover cable.
4. Click the Windows **Start** button.
5. Select **Settings**, then **Printers and Faxes**.
6. Select **Add Printer**.
7. On the **Add Printer Wizard** screen, click **Next**.

8. On the next screen, select **Local printer**, then click **Next**.
9. When the **Add Printer Wizard** asks you to select the printer port, select **Create a new port**. In the Type: menu, select **Standard TCP/IP Port**, then click **Next**. This opens the **Add Standard TCP/IP Printer Port Wizard**. Click **Next**.
10. Enter the printer's IP address. Click **Next**.
11. Select **Custom**, then click on **Settings.**
12. In the **Protocol** box, select **LPR**. In the **LPR Settings** box, type **print** for **Queue Name**:, then click **OK**.
13. Click **Next**. Click **Finish** to return to the **Add Printer Wizard**.
14. If the printer driver was previously loaded on the PWS, select the printer from the list and click **Next**. Otherwise, click **Have Disk**. Print Drivers can be found on the customer's User Software CD, downloaded from the UI via Web Tools or Xerox Website. Navigate to the CD or downloaded driver for your PWS' operating system. Click **OK**.
15. On the **Name Your Printer** screen, enter a name for the printer. Do not set this printer as the default. Click **Next**.
16. Select **Do not share...**
17. Select **Yes** when prompted to print a test page. Printing indicates a functioning network connection.

Windows 7 Connection Procedure

NOTE: *Clear Internet Explorer proxy settings.*

1. Print a Configuration Report. Refer to GP 6.
2. Configure the PWS IP Address:
   a. Click on the Windows **Start** button.
   b. Select **Control Panel**.
   c. Select **Network and Sharing Center**.
   d. On the left Windows pane, Select **Change Adaptor Settings**.
   e. Right click on **Local Area Connection** and select **Properties**.
   f. Select the **Networking** tab and scroll down to Internet Protocol Version 4 (TCP/IPv4). Highlight TCP/ IP and select **Properties**.
   g. Select the **Use the following IP address** radio button.
   h. Enter an IP address one digit different than the machine IP address listed on the Configuration Report (ex., if the machine IP address is 12.138.147.44, enter 12.138.147.45 or 12.138.147.43).
   i. Enter **255.255.255.0** for Subnet mask.
3. Connect the PWS to the printer with the Crossover Cable.
4. Click the Windows **Start** button.
5. Select **Control Panel**, then **Devices and Printers**.
6. Select **Add Printer**.
7. On the **Add Printer Wizard** screen, click **Next**.
8. On the next screen, select **Local printer**, then click **Next**.
9. When the Add Printer Wizard asks you to select a printer port, select **Create a New Port**. In the Type menu, select **Standard TCP/IP Port**, then click **Next**. This opens the **Add Standard TCP/IP Printer Port Wizard**. Click **Next**.
10. Enter the printer's IP address. Click **Next**.
11. Select **Custom**, then click on **Settings.**
12. in the **Protocol** box, select **LPR**. In the **LPR Settings** box, type **print** for **Queue Name**:, then click **Next**.
13. Click **Next**. Click **Finish** to return to the **Add Printer Wizard**.
14. If the printer driver was previously loaded on the PWS, select the printer from the list and click **Next**. Otherwise, click **Have Disk**. Print Drivers can be found on the customer's User Software CD or download from the UI via Web Tools or Xerox Website. Navigate to the CD or downloaded driver for your PWS' operating system. Click **OK**.
15. On the **Name Your Printer** screen, enter a name for the printer. Do not set this printer as the default. Click **Next**.
16. Select **Do not share...**
17. Select **Yes** when prompted to print a test page. Printing indicates a functioning network connection.

Using the Simulator

To use this network printing simulation on different machines, modify the Setup as follows:

1. Print a new Configuration Report for the printer being tested. Refer to GP 6.
2. Reconfigure the PWS IP Address per Step 2 in **Windows XP Connection Procedure or Step 2 in Windows 7 Connection Procedure as appropriate**.
3. Click the Windows **Start** button.
4. Select **Settings**, then **Printers and Faxes**.
5. Right-click on the name of the test printer you created, and select **Properties**
6. Select the **Ports** tab, then click on **Configure Port...**
7. Enter the printer's IP address then click on **OK**.

GP 9 Installing System Software

Purpose

Provide installation instructions to upgrade, downgrade, or restore system software. Four methods of software installation are described in this procedure:

- USB Upgrade using a USB Flash drive
- CWIS Upgrade using the network
- AltBoot or Forced AltBoot using a USB Flash drive
- PWS AltBoot using PWS AltBoot tools

Additional software installation options are available using CWIS when software updates are enabled. Customers can upload system software using CWIS or configure CWIS to monitor an FTP site for system software and automatically upgrade when a newer version is detected. Table 1 lists available software installation procedures and effects to each module.

Table 1 Software Loading Options

Process	Network Controller	UI, Copy Controller, Fax	IIT	DADH	IOT	Finisher
USB Upgrade	Upgrade	Upgrade	Upgrade	N/A	Upgrade	Upgrade
CWIS Upgrade	Upgrade	Upgrade	Upgrade	N/A	Upgrade	Upgrade
Auto FTP Upgrade	Upgrade	Upgrade	Upgrade	N/A	Upgrade	Upgrade
Power On SW Upgrade (POSU)	N/A	Upgrade, Downgrade	Upgrade, Downgrade	N/A	Upgrade	Upgrade
AltBoot	Upgrade, Downgrade, Reload	Upgrade, Downgrade, Reload	After Alt-Boot POSU may occur	N/A	After Alt-Boot POSU may occur	After Alt-Boot POSU may occur
Forced Alt-Boot	Upgrade, Downgrade, Reload	Upgrade, Downgrade, Reload	Upgrade, Downgrade, Reload	Upgrade, Down-grade, Reload. May need NVM changes	Upgrade, Down-grade, Reload	Upgrade, Down-grade, Reload
PWS AltBoot	Upgrade, Downgrade, Reload	Upgrade, Downgrade, Reload	After Alt-Boot POSU may occur	N/A	After Alt-Boot POSU may occur	After Alt-Boot POSU may occur

NOTE: *If a component is installed that has a later version of software than the software set on the SBC PWB, at sytem startup the software on the new component is downgraded.*

NOTE: *Some hardware modules can only be upgraded by installing a newer version of the relevant PWB on the affected hardware module.*

Description

System software sets are compilations of software modules and a software compatibility database (SCD). The SCD lists software versions suitable for the system and installed options. System software is supplied as a .dlm file. Names for .dlm files follow this format:

Product Type_Product Number_system-sw#version number#optional text.dlm

- Product Type is WorkCentre
- Product Number is 7200
- Version number is a numeric series to identify product, version and release date
- Optional Text may or may not appear in the file name.

As an example: WorkCentre_7200_system-sw#071.030.002.33000#.dlm

NOTE: *Software version information appears under Machine Details and on the Service Info screen in service mode.*

At power On, the system checks version information for each installed module and compares it to SCDs stored locally. If a mismatch is deteced, an automatic power On software upgrade (POSU) or downgrade of the affected module is initiated to correct the mismatch.

Software Installation Procedures

NOTE: *Depending on the procedures used, software installtion could require up to 60 minutes. If the software installation procedure fails, go to Boot Failure RAP.*

Installing system software requires:

- If possible, the system must be fully operational. Correct any active faults or jams.
- Obtain a USB Flash drive with a minimum capacity of 1GB.
- Download the latest dlm file from GSN or xerox.com.

Software Upgrade Installation

Two software upgrade procedures are described :

- Software Upgrade Using a USB Flash drive
- Software Upgrade Using a Network Connection

NOTE: *Use AltBoot for downgrading and reloading. If the upgrade procedure fails, go to Boot Failure RAP.*

Software Loading Using a USB Flash drive

Perform these steps:

1. Create a top level folder on the USB Flash drive named upgrade (not case sensitive).
2. Copy the WorkCentre_7200-system-sw#pppmmmyyydddrr#.dlm file into the upgrade folder on the USB Flash drive.

   NOTE: *Make sure there is only one file in the upgrade folder.*

3. If possible, complete or delete all pending print jobs. If the prints jobs cannot be deleted, warn the customer that all pending jobs will be lost.
4. Check Release Notes and currently loaded software. Ensure upgrades can be applied.
5. Connect the USB Flash drive into any of the USB ports.

NOTE: *It is not necessary to switch Off the system to perform a software upgrade.*

Occasionally the USB Flash drive is incompatible with the system. Replace the USB Flash drive with a Xerox approved model. Restart the process.

6. The UI power on light will Intermittently light.
7. The Software Upgrade start screen appears, Figure 2.
8. The upgrade begins and the progress screen opens, Figure 3.
9. The system upgrade process should complete in about 5 minutes and the system return to a ready state.
10. If the process fails, the hard drive is corrupt. Use an AltBoot procedure to recover.
11. The system reboots several times before returning to a ready state. The system may also display the upgrade progress screen, Figure 3. If the power on failure screen is displayed, Figure 7, switch off, then switch on the machine.
12. After the software has upgraded a software upgrade report prints, Figure 1.

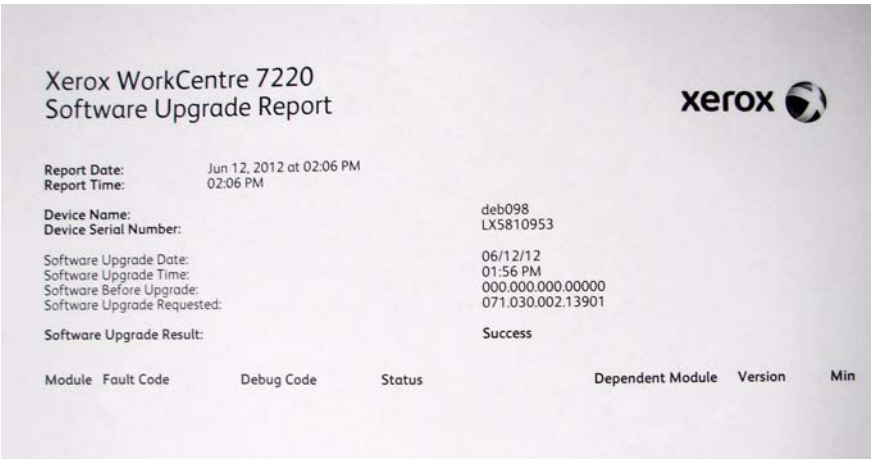
Xerox WorkCentre 7220
Software Upgrade Report

xerox

Report Date: Jun 12, 2012 at 02:06 PM
Report Time: 02:06 PM

Device Name: deb098
Device Serial Number: LX5810953

Software Upgrade Date: 06/12/12
Software Upgrade Time: 01:56 PM
Software Before Upgrade: 000.000.000.00000
Software Upgrade Requested: 071.030.002.13901

Software Upgrade Result: Success

Module	Fault Code	Debug Code	Status	Dependent Module	Version	Min

Figure 1 Software Upgrade Report

Software Loading Using a Network Connection

1. Connect to the system web page either from a PC connected to the network or using the PWS and an ethernet crossover cable.
2. Open a web browser. Enter the system IP address in the web browser Address field, then press the enter key. The system CWIS web page will open.
3. Enter the Administrator User ID and Password.
4. Click on Properties.
5. Select General Setup.
6. Select machine software.
7. Select upgrades. Then check the Enabled check box.
8. Select manual upgrade, then browse. Select the .dlm file from the Upgrade directory.
9. Select install software.

NOTE: *All network connectivity is lost. Progress can be monitored from the UI.*

10. The system reboots before returning to a ready state.

AltBoot Software Loading

CAUTION

The AltBoot Software Loading procedure erases customers unique network configuration settings. NVM data must be saved and restored during this procedure.

CAUTION

It may take several minutes for the upgrade to start. There is ***no*** *indication until the UI displays the* ***Software Upgrade*** *screen. Do not remove the Flash drive or switch Off power until the system reboots.*

NOTE: *To restore the XSA data, use the customers XSA data backup (clone) file on the customers PC. Refer to the Customer Administrators Guide CD.*

AltBoot reloads system software. It is used to upgrade, downgrade or reload software on systems that will not come to a ready state. It can also be used to upgrade or downgrade the software on system options.

AltBoot should be only be used under these circumstances:

- To attempt to recover a corrupt:
  - Hard drive
  - SBC PWB
- After installing a new hard disk drive
- To upgrade system software without running multiple software upgrades.
- To downgrade machine software.

A Forced Altboot uses the available .dlm file to upgrade or downgrade every component in the system regardless of installed software. A Forced Altboot is required to recover from corrupt application code on devices such as Fax, IOT, IIT. Use Forced AltBoot:

- If the Finisher software requires upgrade or reloading. After performing a Finisher SW upgrade only, reinitialize Finisher NVM.
- To downgrade the IOT/IIT software.

CAUTION

If the system appears to hang during the AltBoot process (stay on one screen without apparent progress), wait 10 minutes before switching the system off. The system may still be loading software in the background and switching the system off during this phase will corrupt the hard drive. A new hard drive is required to recover.

CAUTION

Use Forced AltBoot with extreme caution as it replaces boot and application code. Power failure during a Forced Altboot may result in certain PWBs (DUI, Finisher) being unrecoverable.

Perform the following:

1. Create a top level folder on the USB Flash drive named AltBoot (not case sensitive).

   Forced AltBoot only: Create a file named **FORCED_UPGRADE** inside the altboot folder. This is an empty file and must not have an extension; the AltBoot routine only checks to see that a file with this name is present. To create the empty file:

   - Open the AltBoot folder
   - In a blank area of the screen, right click and select “New”.
   - Select “Text Document”.
   - The name “New Text Document.txt” will be highlighted.
   - Type “FORCED_UPGRADE” and hit “Enter”.
   - A pop-up with the message “If you change a file name extension, the file might become unusable. Are you sure you want to change it?” will appear.
   - Click on ”Yes”.

   To eliminate carryover of corrupt data, also create a file called **DISABLE_DATA_BACKUP** (case sensitive with no file extension). This prevents the NC from keeping data normally retained through an AltBoot.

2. Copy the unzipped WorkCentre_7200-system-sw#pppmmmyyydddrr#.dlm file into the AltBoot folder on the USB Flash drive. Make sure that there is only one .dlm file in the Altboot folder.

   NOTE: *Ensure the Microsoft Windows Safely remove hardware procedure is followed before the USB Flash drive is removed.*

3. Insert the USB Flash drive into the system.
4. Use dC361 to save NVM setttings. Verify NVM data was saved to the USB Flash drive.

   NOTE: *The same USB Flash drive that has the .dlm file can be used to store NVM data.*

5. Perform GP 13 Network Clone Procedure.
6. If possible, complete or delete all pending print jobs. If the prints jobs cannot be deleted, warn the customer that all pending jobs will be lost.
7. Switch the system Off using both power switches.
8. Switch On the system. The Altboot process starts automatically. No button presses are required to initiate the Altboot.
9. The upgrade start screen is displayed, Figure 2.

   NOTE: *Occasionally a USB Flash drive is incompatible with the system and the upgrade start screen, Figure 2 is continually displayed. If after 10 minutes the screen has not changed, replace the USB flash drive with a Xerox approved model. Restart the process.*

10. The upgrade begins and the progress screen opens in approximately 2 minutes, Figure 3.

    NOTE: *If the upgrade process screen is not displayed after 4 minutes, restart the process.*

11. The AltBoot process should complete after approximately 5 minutes and the AltBoot complete screen opens, Figure 4. Follow the on screen instructions.
12. If the AltBoot process fails, the AltBoot failed screen opens, Figure 5. Follow the on screen instructions. Restart the procedure and troubleshoot as necessary.

    NOTE: *Do not switch the system Off unless directed to on the UI. During the next 2 reboots, the hard drive is encrypted. Switching the system off can result in partial encryption of the hard drive. The AltBoot process may need to be re-run if power is removed at this step.*

13. The system reboots several times before returning to a ready state. In some instances, a second upgrade progress screen may appear, Figure 3 or the Data Encryption/Decryption in progress screen, Figure 6. If a power On failure screen appears, Figure 7, switch off, then switch on the machine.
14. Check that the software set has installed. Refer to the printed software upgrade report, Figure 7 or by pressing the **Status** button.
15. Use dC361 to restore saved NVM settings.
16. Perform a Network Clone Restore, refer to GP 13.

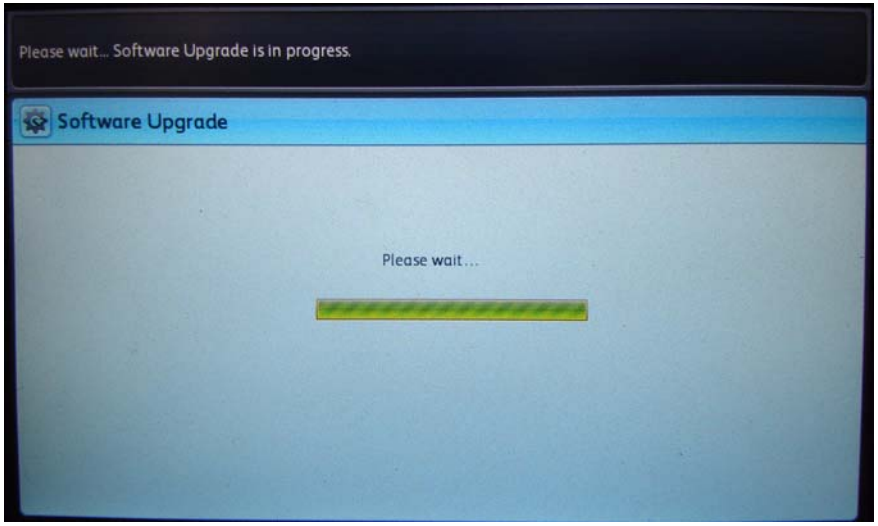

Figure 2 Upgrade start screen

Figure 3 Upgrade progress

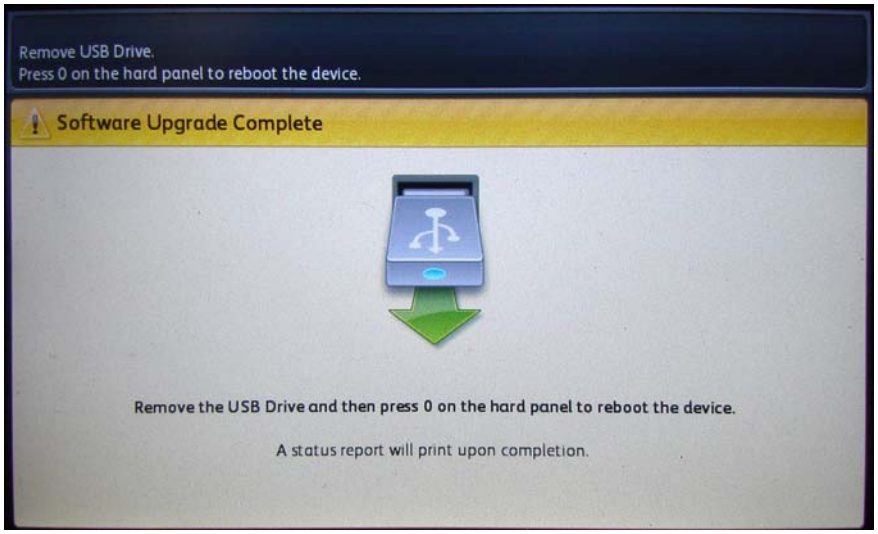

Figure 4 AltBoot complete

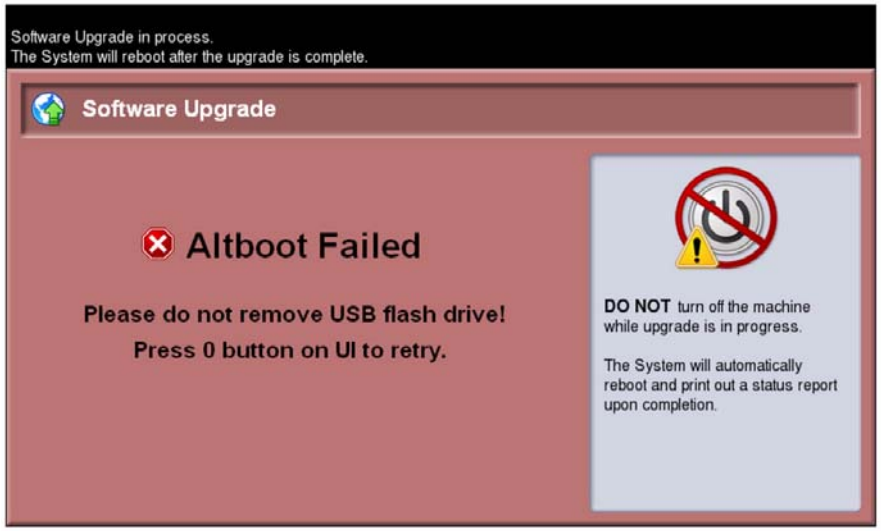

Figure 5 AltBoot failed

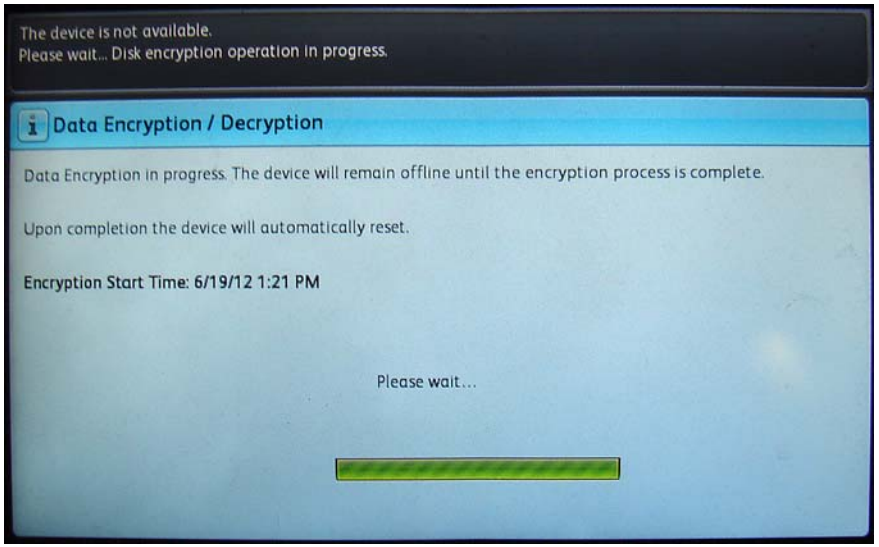

Figure 6 Encryption progress

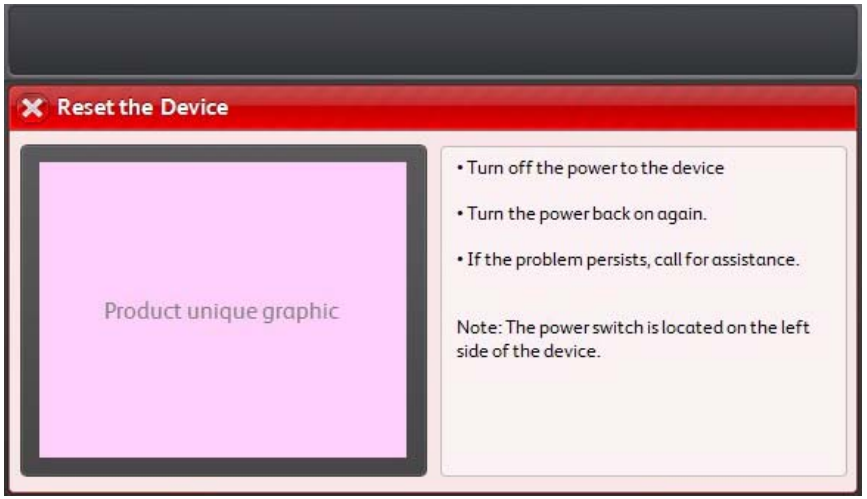

Figure 7 Power On failed

PWS AltBoot Procedure

PWS AltBoot is a tool used to load system software in accounts that do not permit the use of USB Flash drives. The PWS AltBoot tool and installation instructions are available on GSN.

NOTE: *Before loading system software, the system should be fully operational. If possible, clear any active faults or jams before starting this procedure.*

1. Perform an NVM Save, dC361.
2. Perform the Network Clone procedure, GP 13.
3. Print a Configuration Report, GP 6.
4. If possible, complete or delete all pending print jobs. If jobs cannot be deleted, warn the customer that all pending jobs will be lost.
5. Install the PWS AltBoot tool on the PWS using the installation instructions from GSN. Make sure to copy over the system software (.DLM) files, uImage and uboot files.
6. Switch Off the system.
7. Use these steps configure a PWS LAN connection so the PWS can communicate with the system Network Controller. Once established, settings remain in effect until changed.

   NOTE: *Record the original data for every place you make a change. You may or may not need to reset the IP address, depending on PWS usage and local network practice.*

   a. Right click on the **My Network Places** icon.
   b. Select **Properties** to bring up the Network and Dial-up Connections window.
   c. Right click on **Local Area Connection** and select **Properties**.
   d. Select the **General** tab and scroll down to Internet Protocol (TCP/IP). Highlight **TCP/IP** and select **Properties**.
   e. Select the **Use the following IP address** radio button.
   f. Enter an IP address one digit different than the system IP address listed on the Configuration Report for example, if the system IP address is 12.138.147.44, enter 12.138.147.45 or 12.138.147.43.
   g. Enter 255.255.255.0 for Subnet mask.
   h. Select **OK** to close the **TCP/IP Properties** window
   i. Select **OK** to close the **Local Area Connection Properties** window.
   j. You may need to reboot the PWS to load the settings.
8. Conntect the PWS to the system with the Communication Data Cable to the RJ11 connector on the SBC PWB. Connect the other end to the serial port on your PWS.
9. Disconnect the customer's network connection. Connect a crossover cable between the network ports on the system and PWS.
10. Start the PWS AltBoot tool on the PWS.
11. A Browse for Folder window will open. Browse to and highlight the folder that contains the upgrade files. Select **OK**.
12. Switch on the machine. After approximately 10 seconds, the transfer of the uImage and uboot files begins.
13. After file transfer, the settings menu appears in the terminal window. Check that the 'Received packet' line is displayed and that the IP address is set one digit away from the packet was received from address.

    Press **y** at the prompt and continue. If the valid netmask is not set, press **n** and change it to 255.255.255.0
14. From the next menu, select **5> Install SBC software**.
15. At the **Proceed?** prompt, select **Y**.
16. At the second **Proceed?** prompt, select **Y**.
17. From the next menu, select **4> Continue**.
18. A list will display the .DLM file(s) in the directory identified in step 11. Select the correct DLM file to download to the machine. A transfer progress window will then open.
19. After the DLM file has been downloaded to the machine, the Software Upgrade start screen will display on the UI.
20. After approximately 1 minute the upgrade will begin and the Software Upgrade in progress screen will open. If the upgrade process screen is not displayed after 2 minutes, restart the process.
21. The AltBoot process should complete after approximately 5 minutes and the Upgrade Complete screen will open. Ignore the instruction to remove the USB flash drive, only press **0** to continue.
22. The machine will reboot several times before returning to a ready state. During the reboot, the hard drive is encrypted. Switching off the machine can cause only partial encryption of the hard disks partitions. The AltBoot process may need to be re-run if power is removed at this step. The UI displays the Data Encryption/Decryption in Progress screen.
23. After the reboots have finished the machine will boot up and come online. In the SBC-AlternateBoot window on the PWS should display SBC System is 'OPERATIONAL.
24. Disconnect the cable from the PWS serial port and the machine. Disconnect the crossover cable from the PWS network and the machine.
25. Connect the customer's network cable to the machine.
26. Check that the software set has been installed. Refer to the printed software upgrade report or by pressing the machine status button.
27. Perform an NVM Restore, dC361.

28. Perform a Network Clone Restore, GP 13.

Troubleshooting

Listed below are possible problems that may stop AltBoot software loading:

Possible causes and solutions are:

- Incompatible USB Flash drive. Use a Xerox approved model of USB Flash drive.
- Corrupt.dlm file. Replace the .dlm file.
- Incorrect spelling of the AltBoot directory on USB flash drive.
- AltBoot and upgrade folders on the USB Flash drive.
- Bad data connection to the Hard Drive. Reseat the Hard Drive harnesses.
- Hard drive corruption or failure.
- USB port or cable damage. Use a different USB port or cable.
- UI failure.
- SBC PWB failure.
- Check the +5V supply to the USB ports on the SBC PWB.

GP 10 PWS Communication with the SBC

Purpose

This procedure provides instruction on how to connect the PWS directly to the CCS communication port on the SBC using serial cable 600T80374 and level adaptor 600T80375 (XP) or USB cable 600T02332 and PWS Altboot tool (W7). Depending on your operating system, follow one these procedures:

- XP Connection
- W7 Connection

Windows XP Connection Procedure

To configure your PWS for a HyperTerminal connection, connect the serial cable and level adaptor between the PWS and printer and perform the following:

1. In the Task bar at the bottom left of your PWS, select **Start**.
2. Select **All Programs**.
3. Select **Accessories**.
4. Select **Communications**.
5. Select **HyperTerminal**.
6. If a **Default Telnet Program?** dialog box appears, select **No**.
7. When the **Connection Description** dialog box appears, enter **SBC** in the **Name** space.
8. In the **Connect To** dialog box, select **COM1** in the **Connect using:** pull-down
9. Ensure that the following are set in the **COM1 Properties/Port Settings** window:
   - **Bits per second**: = 115200
   - **Data bits:** = 8
   - **Parity:** = None
   - **Stop bits:** = 1
   - **Flow Control:** = None
10. Select **Apply**, then select **OK**.

Windows 7 Connection Procedure

To configure your PWS for a USB connection, download and install the PWS Altboot tool and USB device driver (KB2529073) from GSN. After rebooting the PWS, connect the PWS to the CCS communication port on the SBC. The GND indicator on the cable goes towards the top of the printer. With the PWS and printer connected, perform the following:

1. In the Task bar, select **Start**.
2. TBD.

GP 11 Resetting the System Administrator Password

When a customer requires a new administrator password, the customer must call the Welcome Center and request an administrator password reset.

1. The Welcome Center will request the machine serial number and current copy count.
2. The Welcome Center generates a 12 digit Feature Key number.
3. Press the Machine Status button, then Tools tab.
4. Select the General feature, then Feature Installtion.
5. Enter the Feature Key on the Feature Key screen to reset the Administrator credentials to the default values (**admin** and **1111**).
6. If Password reset has been disabled in CWIS, the password can only be reset by a CSE arriving onsite and performing a **Regular AltBoot** (GP 9).

GP 13 Cloning Network Configurations

Purpose

Use this procedure to connect to the printer and capture Network Configuration settings. The clone file is used to duplicate settings to other machines or restore settings following AltBoot. If Internet Explorer is being used, clear browser proxy settings Depending on your PWS operating system, follow one of the network connection procedures provided:

- Windows XP Connection
- Windows 7 Connection

Clear IE Proxy Settings

Perform these steps to clear Internet Explorer proxy settings before connecting to the printer.

1. Open **Internet Explorer.**
2. Select **Tools - Internet Options**.
3. Select the **Connections** Tab.
4. Select the **LAN Settings** box.
5. Ensure that the “Use a proxy server for your LAN” box is **un-checked**.
6. Select **OK** to close the **Local Area Network Settings** window.
7. Select **OK** to close the **Internet Options window**.
8. Close **Windows Internet Explorer**.

Windows XP Connection Procedure

The following steps establish a Local Area Network (LAN) connection between the PWS and SBC network controller. Once established, settings remain in effect until changed.

NOTE: *Record the original data for every place you make a change. You may or may not need to reset the IP address, depending on PWS usage and local network practice*

1. Record any setting changes, so you can restore the original configuration when finished.
2. Print a Configuration Report (GP 6).
3. Configure the PWS IP Address:
   a. Right click on the **My Network Places** icon.
   b. Select **Properties** to bring up the Network and Dial-up Connections window.
   c. Right click on **Local Area Connection** and select **Properties**.
   d. Select the **General** tab and scroll down to Internet Protocol (TCP/IP). Highlight **TCP/IP** and select **Properties**.
   e. Select the **Use the following IP address** radio button.
   f. Enter an **IP address** one digit different than the machine IP address listed on the Configuration Report for example, if the machine IP address is 12.138.147.44, enter 12.138.147.45 or 12.138.147.43).
   g. Enter 255.255.255.0 for **Subnet mask**.
4. Select **OK** to close the **TCP/IP Properties** window
5. Select **OK** to close the **Local Area Connection Properties** window.

   NOTE: *You may need to reboot the PWS to load the settings.*

6. Connect the crossover cable between ethernet ports on the PWS and SBC.

Windows 7 Connection Procedure

NOTE: *Clear all Internet Explorer proxy settings.*

1. Print a Configuration Report. Refer to GP 6.
2. Configure the PWS IP Address:
   a. Click on the Windows **Start** button.
   b. Select **Control Panel**.
   c. Select **Network and Sharing Center**.
   d. On the left Windows pane, Select **Change Adaptor Settings**.
   e. Right click on **Local Area Connection** and select **Properties**.
   f. Select the **Networking** tab and scroll down to Internet Protocol Version 4 (TCP/ IPv4). Highlight TCP/ IP and select **Properties**.
   g. Select the **Use the following IP address** radio button.
   h. Enter an IP address one digit different than the machine IP address listed on the Configuration Report (ex., if the machine IP address is 12.138.147.44, enter 12.138.147.45 or 12.138.147.43).
   i. Enter **255.255.255.0** for Subnet mask.
3. Connect the crossover cable between ethernet ports on the PWS and SBC.

Create the Clone File

1. Open Internet Explorer
2. Enter the machine's IP address in the **Address** line and select **Go**.

   NOTE: *If the customer has enabled Administrator Password, you will be asked for a user name and password. Defaults are* ***admin*** *as the user name, and* ***1111*** *for the password.*

3. When **Centreware® Internet Services** opens, select the **Properties** Tab. Click on the **General Setup** link, then **Cloning** (Figure 1).

Figure 1 Cloning Screen

4. Scroll down the page to see critical information about the cloning process (Figure 2). Click the **View Feature Details** link to get a list of data that is backed up and/or restored using the Cloning Feature.

Figure 2 Important Notes!

5. Select or deselect the various features as required.
6. Select the **Clone** button below the features listing (Figure 2).

CAUTION

It will take several minutes to create the cloning.dlm file. Do not make any changes or attempt to do anything with the machine such as power off until the process is complete.

CAUTION

After the clone file has been created, do NOT attempt to open the clone file as it may cause the file to become corrupt.

7. **Right click** on **Cloning.dlm** to save the clone file (Figure 3).

NOTE: *When the file is saved, a .txt extension may automatically be placed at the end of the file name. Before loading this clone file, navigate to the saved file, right-click on the file and select* ***Rename****. The correct format for the file name is xxxxxxxx.dlm.*

Figure 3 Saving the Clone File

Uploading a Clone file

NOTE: *This procedure can be done from ANY PC connected to the network or the PWS connected to the machine using a crossover cable. The only requirement is an Internet Browser.*

1. Open Internet Explorer
2. Enter the machine's IP address in the **Address** line and select **Go**.

   NOTE: *If the customer has enabled Administrator Password, you will be asked for a user name and password. Defaults are* ***admin*** *as the user name, and* ***1111*** *for the password.*

3. When the **Centreware® Internet Services** window opens, select the **Properties** Tab. Click on the **General Setup** link, then the **Cloning** link (Figure 1).
4. Scroll to the bottom of the page (Figure 2).
5. Use the **Browse** button to navigate to the clone file, or type the full path to the file.

   Click the **Install** button. If the machine does not reboot after five minutes, power the machine off/on.
6. Verify the cloned settings with a new Configuration Report (GP 6).

GP 14 External Fax Line Test

When the customer reports a fax issue sometimes it is very difficult to determine if the problem is with the customer's phone line or the Xerox machine.

The preferred method of verifying the phone line functionality is to use the Modem saver device part number 600T2133 to ensure the fax line is wired correctly and to use the Analog hand set part number 600T1937 or customer's analog phone to place calls on the line. Be sure that both local and long distance calls can be placed and the line quality is clear, no static.

Use Handset:

- Can it dial externally on the line?
- Can it receive a call on the line?
- Evaluate Line quality. Check Line for unwanted beeps, or noise.

Use Breakout Box to measure voltages (Use the machine chassis as ground). Refer to Fax 101 training for Breakout Box usage instruction:

- Check ground continuity .
- Line Voltage -20 to -50 VDC?
- Loop Current 15 to 95 mA DC?
- Ring Signal 50 to 90 VAC?
- Check Ring-Ground and Tip-Ground <1VAC

If a line quality issue or incorrect voltage is found then the customer will need to resolve these problems.

GP 16 Toner CRUM Conversion

Purpose

This procedure explains how to set the Geographic Differentiation Code and Toner Cartridge Type to the correct values.

Introduction

WorkCentre 7220/7225 machines ship with “Worldwide Neutral” Toner Cartridges. When the cartridges shipped with the machine are installed, the machine is set to Worldwide Neutral configuration. When the first toner cartridge (any color) is replaced, the Geographic Differentiation Code and Toner Cartridge Type in NVM are automatically changed to the same settings as the replacement cartridge. Once these NVM are set, the toner configuration can only be changed with a CRUM conversion.

There are three types of toner: Metered Service, which is a single part number world wide, Sold toner that is specific to the DMO/XING market, and Sold toner that is specific to US/XCL/XE market. See CRUs and Consumables for part numbers. If a toner cartridge of the wrong type (i.e., a “sold” cartridge in a “metered” configured machine) is installed, it will generate a fault code that can be read using dC120 or dC122 and/or a message on the UI indicating toner incompatibility.

If the problem occurs after several toner replacements, the customer may have received the wrong toner in a consumables order; either because the wrong part number was ordered, or the shipment did not match the order. Resolution in this case is simple; the customer should exchange the toner for the correct part.

If the wrong toner was installed at the first toner replacement after install, or if the configuration NVM have changed due to software or NVM corruption, perform the following procedure:

Procedure (Non-Page Pack)

1. Record the machine serial number and the number of **Total Impressions**
2. Call Field Engineering or your NTS and provide the information collected in step 1.
3. You will be given a 6-character passcode.
4. Press the **Machine Status** button on the Control Panel.
5. Select the **Tools** tab. The Tools menu will be displayed.

   On the left side of the screen are several buttons for the categories of features.

   Within each category are **Groups** of features. Each **Group** contains one or more **Features**.
6. Select the **Device Settings** category, then the **Supplies** group, then select **Enter Supplies Activation Code**.

NOTE: *The passcode must be entered within 500 page counts of when it was issued, or it will not be valid.*

7. Enter the passcode string provided in Step 4. If the Passcode contains a special character, the level of software installed on the machine may not allow entry of this character because it is grayed out. Use the following procedure to enter the special character.
   a. Log into Tools
   b. In the Features column, select [General...]
   c. Select [Custom Keyboard Button...]
   d. The 3rd button on the bottom row is the customizable button
   e. Select [Clear Text]
   f. Select [Shift]
   g. Select the special character contained in the Passcode
   h. Select [Save]
   i. Log out of Tools
8. The Geographic Differentiation Code and Toner Cartridge Type will be reset to the values of the customer’s agreed-to supplies plan.

Procedure (Page Pack)

1. Before a 4000 page count is reached, a PIN number must be entered, otherwise the machine will not operate after the 4000 page limit.
2. If a bad PIN is entered 3 times consecutively, you must wait 24 hours before a good PIN can be entered.

GP 18 Restoring the Public Address Book

The Public Address Book is not included in the clone file. To restore the Public Address Book use one of these procedures.

Restore from a USB Flash Drive

Use this procedure to restore the address book using a Flash drive. Refer to Figure 1.

1. Press the Log In/Out button on the UI.
2. Log in as administrator (admin/1111 is the default).
3. Press the **Machine Status** button, then select the **Tools** tab.
4. Select **Service Settings**, then the **Device Address Book** feature.
5. Pull down the menu and select **Import**.
6. Insert the USB Flash drive and browse to the address book .csv file.
7. Select the proper dellimiter and addition policy.
8. Click on the **Import** button to transfer the .csv file.

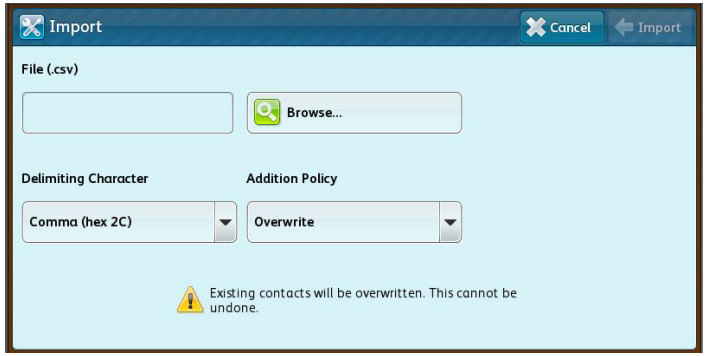

Figure 1 UI Address book import screen.

Restore Using CWIS

To import address books (.csv format), enable HTTPS (SSL) using Centreware® Internet Services. With HTTPS enabled, use this procedure to restore the Public Address Book. Refer to Figure 2:

1. On the CWIS **Address Book** pane, select **Import From File**.
2. Select the **Browse** button and locate the .csv file to import.
3. Select **Comma** for the record delimiter for .csv files.
4. Check the **Remove Bracket** checkbox if desired.
5. Select the radio button to specify whether to append or replace an existing address book.
6. Click on the **Upload File** button to transfer the .csv file.

Figure 2 Address book file import screen

GP 20 Reporting Billing Meter Resets

Procedure

The CSE is required to call in billing meter reads to one of these Customer Business Centers when a machine's meters have been reset:

- Chicago CBC: 1-888-771-5225 (7am - 7pm Central Time). Choose Option 4 - (All other administrative Inquiries).
- St. Petersburg CBC: 1-888-435-6333 (8am - 8pm Eastern Standard Time). Choose Option 4 - (If you have questions regarding your Invoice or account.)
- Dallas CBC: 1-888-339-7887 (7am - 6pm Central Time). Choose Option 4 - (If you have questions regarding your Invoice or account.)

The Customer Business Centers will need the following information:

- CSE/Analyst/Service Agent Name and Employee Number
- 9 Digit Equipment Serial Number
- Old Meter Read and Date
- New Meter Read and Date

GP 21 Common Access Card Servicing - TBD

Description

TBD: This procedure as written is not usable with Javelin. None of the NVM locations are good and the correct one have not been found with the information available on the docushare site. Also, none of the fault codes listed are in the Javelin database.

The Xerox Common Access Card & Personal Identity Verification ID System is an embedded authentication solution. It supports Common Access Cards (CAC) cards issued to Department of Defense (DoD) personnel. These types of smart cards store identity information in the form of Personal Identification Numbers and of digitally encrypted certificates. These are used for id authentication and authorization in order to gain access to work areas, computers, networks, and peripheral devices.

The Xerox CAC Enablement software supports a number of card readers and allows users to authenticate at the device. The card reader is connected to a USB port on the WorkCentre.

Supported Card Types

The CAC solution is compatible with most common CAC card types listed below. Other card types may function with the CAC/PIV ID system but they have not been validated.

- Axalto Pegasus 64K / V2
- Axalto Cyberflex 32K / V1
- Axalto Cyberflex 64K / V2
- Gemplus GemXpresso 64K / V2
- Oberthur 72K / V2
- Oberthur CosmopoIIC 32K / V1
- Oberthur D1 72K / V2 (contact-less and PIV)

Supported Card Readers

The following card readers are compatible with the CAC ID system:

- Gemplus GemPC USB SL
- Gemplus GemPC Twin
- SCM Micro SCR3310
- Panasonic ZU 9PS

Other USB CCID compliant readers may function with the CAC ID system, but have not been validated.

Prerequisites

USB Enablement Kit (software option).

The customer has the option of either supplying a compatible card reader for each MFP, or purchasing the Card Reader from Xerox.

Installation

The customer is responsible for installation of the hardware and the enablement kit software (unless they have purchased Analyst services).

Service

NOTE: *Xerox does not provide any on-site or remote repair or replacement of CAC compatible Cards or Card readers unless Xerox Service supplies the Card Reader. The card reader is manufactured by SCM Microsystems, model SCR3310, and can be identified by the Xerox p/n (960K59280) on the underside of the device.*

Only readers with the Xerox part number affixed are to be replaced by Xerox Service.

Service for CAC hardware is limited to verifying correct operation:

- CSE should check the following NVM values:
  - Location 850-009 should be set to 0
  - Location 700-379 should be set to 0101.
- Check out the machine in the service mode to insure no faults are displayed and that the WorkCentre is functioning correctly in diagnostic mode.
- If working properly, return the machine to customer user mode and have a user attempt to use their card to gain access to the machine features.

If the card functions properly, the CSE's responsibilities have been met.

If the CAC System Fails

Check for any UI displayed messages that might indicate a card failure or card reader failure. Other messages might indicate authorization issues with the customer's card.

Suggest that the user try their card in another device. If the card works in another device, suggest that they alert their on-site supervisor to try another card reader on the failed device or check for network connectivity to the failed device. For Xerox-supplied Card Readers, the CSE will replace the faulty Card Reader.

Suggest that another user try their card on the device where the original card failed. If the second card works, suggest that the user's card has failed.

Servicing non-CAC problems.

Diagnostic Tools

Diagnostics can be accessed as usual when the Common Access Card & Personal Identity Verification ID System is installed.

Customer Tools

If the Machine Status pathway has been locked, the Tools will only be available to the user who has either logged in as a System Admin or has logged in and Authenticated to the machine using their Common Access Card and the correct password for that card.

CAC Feature Principles of Operation

The following steps represent an authentication process.

1. The WorkCentre's control panel will prompt the user to insert their card in the attached reader.
2. Once a card is inserted the user will be prompted to enter their PIN.
3. The PIN is validated against the card, and if they match, this will unlock the card so the Private Certificate Key may be used.
4. The user's digital Certificate is read from the card.

   Steps to validate the Chain of Trust
5. The WorkCentre may be configured to validate the Domain Controller (DC) certificate. If so it submits the DC Certificate and any associated Trusted Root Certificates, to the Online Certificate Status Protocol (OCSP) Responder, to verify that the Domain Controller certificate is valid and not revoked.
6. The system receives a response from the OCSP responder stating whether the certificate is valid and has not been revoked.

   Authenticating with the Domain Controller
7. The system calls the Domain Controller using the PKINIT protocol to validate the CAC user's Certificate.
8. The Domain Controller (Kerberos) returns an encrypted challenge.
9. The WorkCentre decrypts the challenge using the private key from the Domain Controller Certificate that was downloaded on the WorkCentre. The Domain Controller then provides a decrypted session key that the machine uses to decode subsequent communication with the DC.
10. The CAC User's Identity certificate is passed to the Domain Controller for Authorization.
11. If successful, the Domain Controller returns a Ticket Granting Ticket (TGT). Authentication is complete and Authorization begins.
12. At this point authorization is complete and the authorized services such as (scan to e-mail, copy & fax) are now available.
13. The E-mail address is retrieved from the Signing Certificate and is available for inclusion in the From: field whenever the E-mail Service is selected.
14. The session is terminated when the card is removed from the reader, or the administrator settable timeout expires.

CAC Feature Limitations:

- The CAC solution requires the Scan option to be installed.
- When CAC authentication is enabled on the device the Copy Feature is locked by default and can only be accessed once the user has successfully authenticated.

Possible Fault Codes That May Be Observed

- 021-210:USB Card Reader connection error.
- 021-211:USB Card Reader broken.
- 021-212:USB Card Reader couldn't start.
- 018-725:Users Kerberos password has expired. Please ask system administrator of KDC to extend password expiration date or change password.
- 018-726:Not all of Certificate Authority certificate(s) of the CAC Root and Intermediate certificates are registered in device.
- 018-727:Check that CAC certificate is valid, or that the CAC user is registered on the configured Domain Controllers.
- 018-728:Check that the Domain Controller Certificate is invalid.
- 016-533:Domain Controller server clock-skew error. Enable NTP.
- 016-534:Could not connect with the configured Domain Controller realm.
- 016-539:Fatal error on the Domain Controller.
- 016-231:A fault or an error has occurred with the CAC Card Reader.

GP 22 Foreign Device Interface Setup

Purpose

This procedure explains the process for troubleshooting, installing and configuring the Foreign Device Interface (FDI).

Procedure

1. The FDI Kit has been installed, but the Configuration sheet indicates that the Foreign Interface Board is not present. Go to Configuring the Foreign Device Interface.
2. The External Device does not enable the machine or does not count. Use the Foreign Interface and External Device Test Tool to resolve the problem.
3. Directions for the Foreign Device Test Tool are not packaged with the tool. Go to Foreign Device Test Tool.

Installation

Prerequisites: FDI Interface Kit.

NOTE: *This is a purchased item and must be ordered through Sales.*

NOTE: *Observe all Electrostatic Discharge (ESD) precautions when performing this procedure.*

1. Switch off the printer power. Disconnect the power cord.
2. Remove the Control Unit.
3. Remove the FDI Harness Connector Cutout Cover from the Control Unit (Figure 1)
4. Remove the two (2) standoffs from the FDI Connector, then using the Standoffs, secure the FDI Connector to the Control Unit. Figure 2.
5. Plug the Harness into the FDI PWB then mount the FDI PWB onto P/J7 of the SBC PWB.

   NOTE: *It is possible to connect the Foreign Interface Cable in reverse on the FDI PWB. Orient the cable properly.*

6. Replace the Control Unit and Power On the Machine.

Configuring the Foreign Device Interface

1. Press the Log In/Out button.
2. Log into the machine as admin, with default password of 1111.
3. Touch [Machine Status], then from Tools, press the Accounting Settings button.
4. Press Accounting Mode
5. Press Auxiliary Access and select one of Auxiliary Device Type buttons available to configure the device and Select Save.
6. From the Accounting Mode menu, Select Service Access & Accounting and Select those Services that will be restricted by the auxiliary device. A check mark in the box will indicate those services which will be restricted, select Save.

   NOTE: *If no selections are made, the Foreign Interface board will indicate "not present" on the configuration report.*

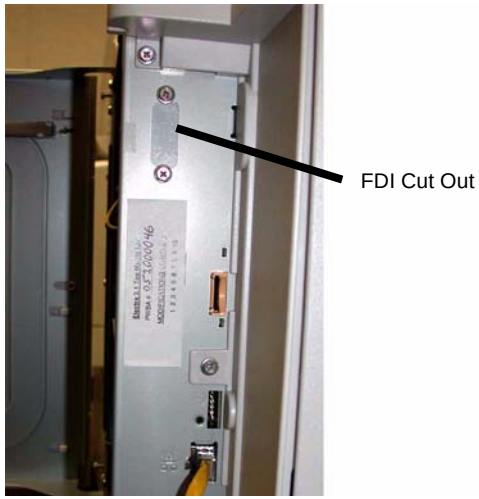

Figure 1 FDI Cut Out Cover

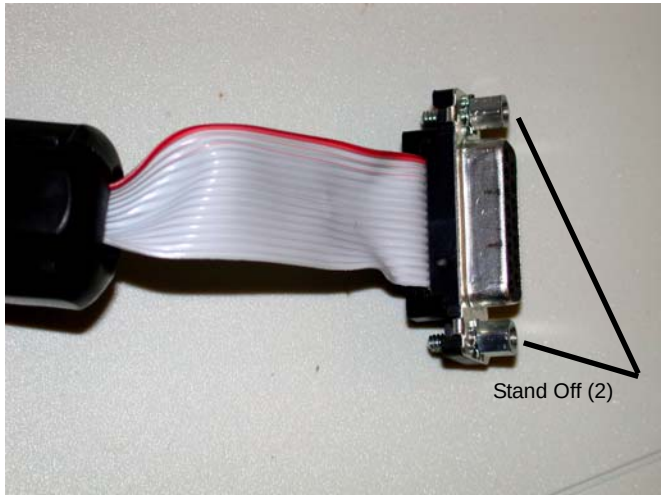

Figure 2 Connector Standoff

GP 23 Intermittent or Noise Problem RAP

Purpose

The purpose of this RAP is to provide guidance for resolving an intermittent or noise problem. This is not an exact procedure, but a set of recommended actions that use the resources of the service manual to help locate the cause of an intermittent or noise problem.

Procedure

1. Check the service log. Recent service actions may provide information about the problem. For example, a component that was recently replaced to correct another problem may be the cause of the new intermittent problem.
2. Noise problems may be due to improper installation. Check for packing materials that have not been removed. Check for loose or missing hardware.
3. Run the machine in a mode that vigorously exercises the function that is suspected. The machine may fail more frequently or may fail completely under these conditions. Look for signs of failure or abnormal operation.

   An intermittent problem can usually be associated with a RAP, since when it does fail, it results in a fault code, a jam code, or some other observable symptom.
4. Using the RAP that is associated with the symptom of the intermittent problem, examine all of the components that are referenced in the RAP. Look for:
   - contamination, such as a feed roller that has a build up of dirt or toner
   - wear, such as gear teeth that are rounded or have excessive backlash
   - HFSI, even if they are not near or have not exceeded the SPEC LIFE or COPY COUNT value
   - wires chafing against components of the machine, especially against moving components
   - misaligned, mis-adjusted, or incorrectly installed components
   - slow or slipping clutches; slow or binding solenoids
   - damaged components
   - excessive heat, or symptoms of excessive heat, such as the discoloration of a component
   - loose cables or wires
5. Using the RAP that is associated with the symptom of the intermittent problem, perform all of the adjustments for the components or functions that are referenced in the RAP. Check to ensure that the adjustment can be made and that there is an adequate range of adjustment, and that it can be set to or near the nominal value. Any abnormality that is observed may be an indication of the cause of the problem. For example, a component can be adjusted to the nominal value, but it is at the limit of the adjustment range. This is not normal and may be an indication of the cause of the problem.
6. Operate all of the components in the appropriate RAP that is associated with the symptom of the intermittent problem with Component Control. Observe the components for any symptoms of abnormal operation, such as a hesitation, or an unusual sound.
7. Check that the AC and DC power are within specification.
8. Get technical advice or assistance when it is appropriate. This will depend upon the situation and the established local procedures.
9. Examine the components that are not in the RAP, but are associated with the function that is failing. Refer to the BSDs. Look for:
   - contamination, such as a feed roller that has a build up of dirt or toner
   - wear, such as gear teeth that are rounded or have excessive backlash
   - HFSI, even if they are not near or have not exceeded the SPEC LIFE or COPY COUNT value
   - wires chafing against components of the machine, especially against moving components
   - misaligned, mis-adjusted, or incorrectly installed components
   - slow or slipping clutches; slow or binding solenoids
   - damaged components
   - excessive heat, or symptoms of excessive heat, such as the discoloration of a component
   - loose cables or wires
10. Perform the adjustments for the components that are not in the RAP, but are associated with the function that is failing. Refer to the BSDs. Check to ensure that the adjustment CAN BE MADE and that there is an adequate range of adjustment, and that it can be set to or near the nominal value. Any abnormality that is observed may be an indication of the cause of the problem. For example, a component can be adjusted to the nominal value, but it is at the limit of the adjustment range. This is not normal and may be an indication of the cause of the problem
11. Operate all of the components that are not in the RAP, but are associated with the function that is failing with Component Control. Refer to the BSDs. Observe the components for any symptoms of abnormal operation, such as a hesitation, or an unusual sound.
12. Replace any components or consumables that are known to be a frequent cause of the problem. When doing this, consider the cost and time required. If the suspected item is inexpensive, can be installed quickly, and has a high probability of resolving the problem, then it is reasonable to replace it.
13. Leave an accurate and detailed record of your actions in the service log. Describe what you have observed, what actions you took, and the recommended next steps.

GP 24 How to turn off the Power Saver Functions

The following procedure is to be used to disable the power saver and/or Low Power Mode per customer request or for testing purposes.

Procedure

NOTE: *Both the Engine and the Network Controller must be disabled.*

1. To disable the Engine, perform the following:
   a. Enter NVM Read/Write in the UI diagnostics and change the following locations from 1 (enabled) to 0 (disabled):
      616-002 Low Power Enabled
      616-008 Power Off Enabled
   b. Exit diagnostics and power off then power on
2. To disable the Network Controller, perform the following:
   a. Log into the webpage as Administrator and uncheck the box shown in the attachment
   b. Select Apply then log out

GP 25 Remote Control Panel

The Remote Control Panel feature enables users the ability to:

- Remotely view the local UI display graphics
- Operate both hard and soft buttons on the control panel

The Remote Control Panel on the remote user PC mimics the device control panel enabling the remote user to operate the device as though they were standing at the machine.

Operation

Feature enablement – The feature is defaulted off when delivered to the customer. The System Administrator is required to enable the feature to allow usage.

1. In the Centreware window, login as admin.
2. Select [Support > Remote Control Panel].
3. Under Configuration, select [Edit].
4. Select [Enable].

Feature access permissions – The SA is required to set the permissions of the feature for it to be usable. When Enable is selected, the permission levels are displayed.

- SA only – This setting will prevent any user including Service Engineer personal from using the feature.
- SA and Service Engineer – This setting allows only the SA or Service Engineer to use the feature by authenticating their respective user credentials.
- All users – This opens the feature to all users without the need to authenticate.

Remote Session – The Remote Control Panel session is initiated under Access. This feature allows only the Admin and Diagnostics User to interact with the machine's local Control Panel. Before starting the session, the remote user should determine if the session collaborative or blocked.

- **Collaborative** - This mode means that both the Remote Control Panel and the Local UI are active. This mode can be used by System administrator, help desk support, IT support, or training when the person at the machine and the remote user need to see how the other is operating the machine.
- **Local UI blocking** – Check the box by Block Local Control Panel (local user can only observe). This blocks the local panel when the remote session is initiated. This protects the machine during remote service procedures. When activated, the local user is notified by a message that the local panel hard and soft keys are not functional at this time.

Only one remote connection at a time is allowed. If a user attempts to initiate a session while another one is active, they will get a message indicating the system is busy and to try again later. This allows a service engineer to view the device remotely without concern that another non-Service Engineer session can also connect.

NOTE: *If a general user has a remote session active and an SA initiates a session, the SA has a button that will disconnect the general user. This way the SA can take control when desired.*

A secure connection is required to create a remote session. If SSL is not set on the machine, a message will appear stating that it must be set. The window for enabling SSL will be displayed and can be set so that the machine is configured to allow the remote session. After the machine reboots, the remote session can start.

Remote session indication – When the remote session is initiated, a temporary popup message is displayed on the Local UI alerting any local users that there is a remote user online. A status message is then indicated in the status region and soft login button. The soft login button region is meant to describe the user roles. Authenticated users, including CSEs, are displayed. These remain persistent until the session is closed. A local Service Engineer will know whether the device is being used.

Remote Session Operation - When the Remote Control Panel is opened, the remote user will see a mimic of the local UI.

- The soft and hard buttons from the machine control panel are displayed on the Remote Control Panel. The hard buttons are located in slightly different locations, but are labeled and function the same as on the local control panel.
- Operation of all the machine features is the same on the Remote Control Panel as at the local control panel and UI.

  NOTE: *If the browser magnification is set to 75%, then the viewing window will be smaller than the control panel and the touch screen will be truncated. Conversely, if the browser magnification is set to 125%, the viewing window is larger than the remote control panel. The entire control panel is visible but there will be large grey areas around the panel.*

Service Access - The System Administrator has access to the machine within the customer firewall. The service engineer must be invited inside the firewall.

- The procedure for the customer to invite the service engineer to remotely access the machine is OPCO dependent. Contact your OPCO for instructions on how to engage the customer.
- After the customer has given the service engineer a portal through their firewall, the service engineer can connect to the machine.

  Only the service engineer should have the diagnostic User ID and Password. Only the Service Engineer can launch a diagnostics session from the remote UI.

  NOTE: *If the device is in service mode when a remote session is initiated, the session will only connect if logged in as diag in CentreWare. This prevents non-service engineers from connecting into the device while it is being serviced.*

  1. Connect to the printer via CentreWare IS.
  2. Login to Centerware
     - User ID - **diag**
     - Password - **3424**
  3. Select **[Support]**, then select **[Remote Control Panel]**.
  4. If required, check Block Local Control Panel (user can only observe).
  5. Select **[Open Remote Control Panel]**.

     NOTE: *Only one Remote Control session at a time is allowed. If a remote session is in progress, a message (Remote Control Panel session is already active.) will appear. If approved by the SA, select Disconnect Current Session to enable access. If the message returns, the machine may need to be rebooted.*

  6. If the window "The web site's certificate cannot be verified. Do you want to continue." appears, select **[Yes.]**.

     If the window "There is a problem with this website's security certificate." appears, select **[Continue to this website (not recommended.)]**
  7. To start diagnostic mode on the machine, Select the Service Diagnostics button on the mimic and login (6789).

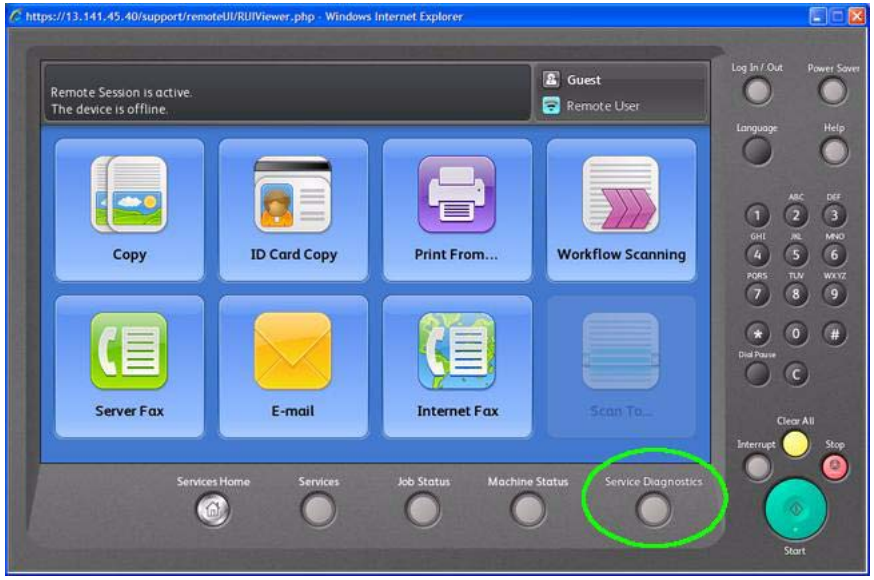

Figure 1 Diagnostic Access

Ending the session - A session can be terminated in serveral different ways. If in a diagnostic session, remember to perform Call Closeout on the machine before ending the session.

- Remote user closes the Remote Control Panel window.
- Machine reboots.
- Unplug the internet cable at the machine.
- Customer host that invited the service access closes their browser.
- System Timers - The session will be terminated if the system timers time out.

Product Codes

Table 1 Product Codes

Product Description	Product Code
WorkCentre 7225 IOT with 2 Tray Module - 120V ***NOTE:*** *No Speed Includes Scan Kit, Server Fax, iFax, Data Security, JBA, EIP v2.x*	LX5
WorkCentre 7225 IOT with 2 Tray Module - 120V GSA ***NOTE:*** *No Speed Includes Scan Kit, Server Fax, iFax, Data Security, JBA, EIP v2.x*	LX5N
WorkCentre 7220 IOT with Stand Module - 120V ***NOTE:*** *No Speed Includes Scan Kit, Server Fax, iFax, Data Security, JBA, EIP v2.x*	LX7
WorkCentre 7225 IOT with 2 Tray Module - 220V ***NOTE:*** *No Speed Includes Scan Kit, Server Fax, iFax, Data Security, JBA, EIP v2.x*	LX6
WorkCentre 7220 IOT with Stand Module - 220V ***NOTE:*** *No Speed Includes Scan Kit, Server Fax, iFax, Data Security, JBA, EIP v2.x*	LX8
WorkCentre 7225 IOT with 2 Tray Module without SB Controller - 120V	LX5E
WorkCentre 7220 IOT with Stand Module without SB Controller - 120V	LX7E
WorkCentre 7225 IOT with 2 Tray Module without SB Controller - 220V	LX6
WorkCentre 7220 IOT with Stand Module without SB Controller - 220V	LX8
Integrated Office Finisher	XDE
Office Finisher LX	XDF

Common Tools

Table 1 Common Tools

Description	Part Number
Screw Driver (-) 3 x 50	600T40205
Screw Driver (+) 6 x 100	600T1989
Screw Driver (+) NO.1	499T356
Stubby Driver (+) (-)	600T40210
Screw Driver (=) 100MM	499T355
Spanner and Wrench 5.5 x 5.5	600T40501
Spanner and Wrench 7x 7	600T40502
Hex Key Set	600T02002
Box Driver 5.5MM	600T1988
Side Cutting Nipper	600T40903
Round Nose Pliers	600T40901
Digital Multi-meter Set	600T2020
Interlock Cheater	600T91616
Silver Scale 150MM	600T41503
CE Tool Case	600T1901
Magnetic Screw Pick-up Tool	600T41911
Scribe Tool	600T41913
Magnetic pickup	600T41911
Eye Loop	600T42008
Flash Light	600T1824
Brush	600T41901
Tester Lead Wire (red)	600T 9583
Tester Lead Wire (black)	600T2030

Product Tools and Test Patterns

Table 1 Tools and Test Patterns

Description	Part Number
Color Test Pattern	82E13120
Geometric Test Pattern	82E8220
DADF Test Pattern	82E2000
DADF Test Pattern (A3)	82P521
HVPS test probe (1/10X)	600T1653
HVPS test probe adapter	600T1996
Copy Paper Carrying Case	600T1999
Copy Paper Zip Lock Bag	600T2000
Xerox Color Xpressions Plus 24# 11×17 in,	3R5465
Colortech Plus - 90 gsm - A3	3R94642
Service and Machine NVM Log	700P97436
Serial Cable	600T2058
USB Cable	600T02231
Null Modem Adapter (female/female)	113E40060
PWS power cord adapter	600T2018
Micro Probe Kit	600T02177
Machine Service Log	Adobe PDF file on CD

Cleaning Materials

Table 1 Cleaning Materials

Description	USSG Part Number	XE Part Number
Cleaning fluid (8oz., Formula A)	43P48	8R90034
Film remover (8 oz.)	43P45	8R90176
Lens/mirror cleaner	43P81	8R90178
Lint-free (white) cleaning cloth	19P3025	19P3025
Lint-free Optics cleaning cloth	499T90417	499T90417
Cleaning towels	35P3191	600S4372
Drop cloth	35P1737	35P1737
Cotton Swab	35P2162	35P2162

CRUs and Consumables

Table 1 CRUs and Consumables

Name	Part Number	Comments
Black Toner Cartridge	006R01453	metered (worldwide)
	006R01457	US/XCL/XE sold
	006R01461	DMO sold
Cyan Toner Cartridge	006R01456	metered (worldwide)
	006R01460	US/XCL/XE sold
	006R01464	DMO sold
Magenta Toner Cartridge	006R01455	metered (worldwide)
	006R01459	US/XCL/XE sold
	006R01463	DMO sold
Yellow Toner Cartridge	006R01454	metered (worldwide)
	006R01458	US/XCL/XE sold
	006R01462	DMO sold
Black Drum Cartridge	013R00657	
Yellow Drum Cartridge	013R00658	
Cyan Drum Cartridge	013R00660	
Magenta Drum Cartridge	013R00659	
Fuser Module (110V)	008R13087	
Fuser Module (220V)	008R13088	
Waste Toner Container	008R13089	
2nd BTR	008R13086	
Transfer Belt CRU (IBT Assembly)	001R00610	
Staple Refills - Convenience Stapler	008R12941	3 refills/carton
Staple Refills - Integrated Office Finisher	008R12941	3 refills/carton
Staple Refills - Office Finisher LX	008R12941	3 refills/carton
Staple Cartridge - Convenience Stapler	008R12964	1 cartridge
Staple Cartridge - Office Finisher LX	008R12964	1 cartridge
Staple Cartridge - Office Finisher LX Booklet Maker	008R12897	8 cartridges/carton

Glossary of Terms

Table 1 Glossary

Term	Description
A3	Paper size 297 millimeters (11.69 inches) x 420 millimeters (16.54 inches).
A4	Paper size 210 millimeters (8.27 inches) x 297 millimeters (11.69 inches).
AC	Alternating Current is type of current available at power source for machine.
A/D	Analog to Digital refers to conversion of signal
ADC	Automatic Density Control
ADJ	Adjustment Procedure
AGC	Automatic Gain Control
A/P	Advanced/Professional (Finishers)
ApeosWare Authentica-tion	connected to external authentication server, Active Directory, does the authentication of your devices, be it a multifunction or a network printer. Changes in Active Directory are automatically reflected in Authentication Agent. Usage restriction can be set on copy, print, scan, fax, color or mono-chrome by user and by user group.
APS	Auto Paper Select - The machine selects a suitable size of copy paper auto-matically based on the detected original size and the reproduction ratio you select.
ATC	Automatic Toner Concentration
ATS	Auto Tray Switch - The machine will automatically select a usable tray that has paper when the one presently in use becomes empty. This feature only works when the Auto Tray Switch is selected and the paper size being used is the same for all usable paper trays.
Attestation Agent	Remote attestation provides the basis for one platform toestablish trusts on another.
ASIC	Application-Specific Integrated Circuit (ASIC) is an integrated circuit (IC) customized for a particular use, rather than intended for general-purpose use.
Bit	Binary digit, either 1 or 0, representing an electrical state.
BMLinks	stands for Business Machine Linkage Service. BMLinkS is a specification developed with participation of major Office Automation appliance vendors in Japan. With BMLinkS, it now becomes possible to create multi-vendor systems where Office Automation appliances are simple and easy to use on networks.
BSD	Block Schematic Diagram
BTR	Bias Transfer Roll
BUR	Back up Roll
CA	Certificate Authority or Certification Authority - an entity that issues digital certificates for use by other parties.
CCD	Charge Coupled Device (Photoelectric Converter)
CD	1:Circuit Diagram; 2: Compact Disc
CDUP	Use the CDUP subcommand to change the working directory to the parent directory on the foreign host.
Chip	Integrated Circuit (IC)

Table 1 Glossary

Term	Description
CPLD	Complex Programmable Logic Device - a programmable logic device with complexity between that of PALs and FPGAs, and architectural features of both. The building block of a CPLD is the macro cell, which contains logic implementing disjunctive normal form expressions and more specialized logic operations.
CRU	Customer Replaceable Unit
CRUM	Customer Replaceable Unit Monitor
CWIS	CenterWare Internet Services
CYMK	Toner colors for machine; Y=yellow, C=cyan, M=magenta, and K=black
DADF	Duplexing Automatic Document Feeder
DC	Direct Current is type of power for machine components. Machine converts AC power from power source to DC power.
DIMM	Dual In-line Memory Module - a series of dynamic random access memory integrated circuits.
DLD	Download Direct Method - Down Load Direct (DLD) was developed to accelerate downloads
DMA	Direct memory access (DMA) is a feature of modern computers and microprocessors that allows certain hardware subsystems within the computer to access system memory for reading and/or writing independently of the central processing unit.
DMM	Digital Multimeter is generic name for meter that measures voltage, current, or electrical resistance.
DNS	Domain Name System - a hierarchical naming system for computers, services, or any resource connected to the Internet or a private network. It associates various information with domain names assigned to each of the participants. Most importantly, it translates domain names meaningful to humans into the numerical (binary) identifiers associated with networking equipment for the purpose of locating and addressing these devices worldwide.
DTMF	Dual-Tone Multi-Frequency signaling - is used for telecommunication signaling over analog telephone lines in the voice-frequency band between telephone handsets and other communications devices and the switching center.
Duplex	2-sided printing or copying
EA	Emulsion Aggregation (toner)
EEPROM	Electrically Erasable Programmable Read-Only Memory - a type of non-volatile memory used in computers and other electronic devices to store small amounts of data that must be saved when power is removed, e.g., calibration tables or device configuration.
EME	Electromagnetic Emissions are emitted from machine during normal operation and power of these emissions are reduced by machine design features.
ESD	Electrostatic Discharge. A transfer of charge between bodies at different electrostatic potential.
ESG	European Solutions Group - also referred to as XE (Xerox Europe)
FE	Field Engineer

Table 1 Glossary

Term	Description
FIFO	First In, First Out - an abstraction in ways of organizing and manipulation of data relative to time and prioritization. This expression describes the principle of a queue processing technique or servicing conflicting demands by ordering process by first-come, first-served (FCFS) behaviour: what comes in first is handled first, what comes in next waits until the first is finished, etc.
FoIP	FAX Over Internet Protocol
FPGA	Field-Programmable Gate Array - an integrated circuit designed to be configured by the customer or designer after manufacturing
FS	Fast Scan (direction) - LE - to - TE
FTP	File Transfer Protocol - a standard network protocol used to exchange and manipulate files over a TCP/IP-based network, such as the Internet.
GND	Ground
HCF	High Capacity Feeder
HDD	Hard Disk Drive
HFSI	High Frequency Service Item
HGEA	High Grade Emulsion Aggregation (toner)
HVPS	High Voltage Power Supply
Hz	Hertz (Cycles per second)
IBT	Intermediate Belt Transfer
I/F	Interface
IIO	Intermediate Image Overwrite
IIT	Image Input Terminal - the Scanner/CCD portion of the machine
IPSEC	Internet Protocol Security - a protocol suite for securing Internet Protocol (IP) communications by authenticating and encrypting each IP packet of a data stream. IPsec also includes protocols for establishing mutual authentication between agents at the beginning of the session and negotiation of cryptographic keys to be used during the session.
IOT	Image Output Terminal - the ROS/Xero/paper handling/ fusing portion of the machine
IM	Image Management Software - Windows and Macintosh software for viewing, organizing, cataloging, managing, browsing, storing, sharing, and printing images.
IPS	Image Processing Subsystem
IQ	Image Quality
JBA	Job-based Accounting
JBIG	Joint Bi-level Image Experts Group - JBIG was designed for compression of binary images, particularly for faxes, but can also be used on other images.
KC	1000 copies
Kerberos	a computer network authentication protocol, which allows nodes communicating over a non-secure network to prove their identity to one another in a secure manner.
LCD	Liquid Crystal Display

Table 1 Glossary

Term	Description
LDAP	Lightweight Directory Access Protocol - an application protocol for querying and modifying directory services running over TCP/IP
LE	Lead Edge of copy or print paper, with reference to definition of term TE
LED	Light Emitting Diode
LEF	Long Edge Feed
LTR	Letter size paper (8.5 x 11 inches)
LocalTalk	a particular implementation of the physical layer of the AppleTalk networking system from Apple Computer. LocalTalk specifies a system of shielded twisted pair cabling, plugged into self-terminating transceivers, running at a rate of 230.4 kbit/s.
LUT	Look Up Table - array of NVM locations that store process control data
LVPS	Low Voltage Power Supply
MIME	Multipurpose Internet Mail Extensions - an Internet standard that extends the format of e-mail to support:Text in character sets other than ASCII Non-text attachments Message bodies with multiple parts Header information in non-ASCII character sets
MCU	Machine Control Unit - a microcontroller (also microcomputer, MCU or C) is a small computer on a single integrated circuit consisting internally of a relatively simple CPU, clock, timers, I/O ports, and memory.
MF	Multi-Function
MN	Multinational
MOB	Marks On Belt> MOB Sensor is used to determine Color Registration
MRD	Machine Resident Disk
MSI	Multi Sheet Inserter
NAK	Negative Acknowledgement - negative acknowledgment or not acknowledged. It is a signal used in digital communications to ensure that data is received with a minimum of errors.
NIC	Network Interface Card
NVM	Non Volatile Memory
OCT	Offsetting Catch Tray
OEM	Original equipment manufacturer
OGM	On-going Maintenance
PC	Personal Computer
PCI	Peripheral Component Interconnect - a computer bus for attaching hardware devices in a computer. These devices can take either the form of an integrated circuit fitted onto the motherboard itself, called a planar device in the PCI specification, or an expansion card that fits into a slot.
PDL	Page Description Language - a language that describes the appearance of a printed page in a higher level than an actual output bitmap.
PIO	Programmed Input/Output - a method of transferring data between the CPU and a peripheral such as a network adapter or an ATA storage device.
PJL	Printer Job Language - a method developed by Hewlett-Packard for switching printer languages at the job level, and for status readback between the printer and the host computer.

Table 1 Glossary

Term	Description
PL	Parts List
P/O	Part of (Assembly Name)
POP Server	Post Office Protocol - Version 3 (POP3) is intended to permit a workstation to dynamically access a maildrop on a server host in a useful fashion. Usually, this means that the POP3 protocol is used to allow a workstation to retrieve mail that the server is holding for it.
PWB	Printed Wiring Board
PWS	Portable Workstation for Service
PJ	Plug Jack (electrical connections)
Proxy Server	a server (a computer system or an application program) that acts as an intermediary for requests from clients seeking resources from other servers.
RAM	Random Access Memory
RAP	Repair Analysis Procedure for diagnosis of machine status codes and abnormal conditions
R/E	Reduction/Enlargement refers to features selection or components that enable reduction or enlargement
Redirector	an operating system driver that sends data to and receives data from a remote device. A network redirector provides mechanisms to locate, open, read, write, and delete files and submit print jobs.
RegiCon	Registration Control
REP	Repair Procedure for disassembly and reassembly of component on machine
RIS	Raster Input Scanner
ROM	Read Only Memory
SAD	Solid Area Density
SCP	Service Call Procedure
SEF	Short Edge Feed
Self-test	An automatic process that is used to check Control Logic circuitry. Any fault that is detected during self-test is displayed by fault code or by LEDs on PWB.
SIMM	Single Inline Memory Module used to increase printing capacity
Simplex	Single sided copies
SIP	Session Initiation Protocol - a signaling protocol, widely used for controlling multimedia communication sessions such as voice and video calls over Internet Protocol (IP).
S/MIME	Secure/Multipurpose Internet Mail Extensions - a standard for public key encryption and signing of MIME data.
Software Key	a small program that will generate valid CD keys or serial/registration numbers for a piece of software.
SSL	Secure Socket Layer - cryptographic protocols that provide security for communications over networks such as the Internet
SMB	Server Message Block - operates as an application-layer network protocol[1] mainly used to provide shared access to files, printers, serial ports, and miscellaneous communications between nodes on a network.

Table 1 Glossary

Term	Description
SMTP	Simple Mail Transfer Protocol - an Internet standard for electronic mail (e-mail) transmission across Internet Protocol (IP) networks.
SSL	Secure Sockets Layer - are cryptographic protocols that provide security for communications over networks such as the Internet.
TE	Trail Edge of copy or print paper, with reference to definition of term LE
TMA	Toner Mass/unit Area detection. The combined function of the MOB/ADC Sensors.
TRC	Tone Reproduction Curve
TTM	Tandem Tray Module
UM	Unscheduled Maintenance
UI	User Interface
USB	Universal Serial Bus
W/	With - indicates machine condition where specified condition is present
WebDAV	Web-based Distributed Authoring and Versioning - a set of extensions to the Hypertext Transfer Protocol (HTTP) that allows computer-users to edit and manage files collaboratively on remote World Wide Web servers. RFC 4918 defines the extensions.
W/O	Without - indicates machine condition where specified condition is not present
XBRA	Xerox Brazil
XE	Xerox Europe - also referred to as ESG (European Solutions Group)
XEIP	Xerox Extensible Interface Platform (EIP). Xerox EIP is a software platform upon which developers can use standard web-based tools to create server-based applications that can be configured for the MFP's touch-screen user interface.
XLA	Xerox Latin America
YCMK	Toner colors for machine; Y=yellow, C=cyan, M=magenta, and K=black
XMEX	Xerox Mexico

Change Tags

Change Tag Introduction

Important modifications to the copier are identified by a tag number which is recorded on a tag matrix:

- The tag matrix for the IOT is molded into the inside of the Front Door.
- The tag matrix for the Finisher is a label affixed to the inside of the Finisher Front Door

This section describes all of the tags associated with the machine, as well as multinational applicability, classification codes, and permanent or temporary modification information.

Classification Codes

A tag number may be required to identify differences between parts that cannot be interchanged, or differences in diagnostic, repair, installation, or adjustment procedures.

A tag number may also be required to identify the presence of optional hardware, special non-volatile memory programming, or whether mandatory modifications have been installed. Each tag number is given a classification code to identify the type of change that the tag has made. The classification codes and their descriptions are listed in Table 1.

Table 1 Classification Codes

Classification Code	Description
M	Mandatory tag.
N	Tag not installed in the field.
O	Optional tag.
R	Repair tag.

Change Tags

There are no Change Tags currently in effect for this product.

7 Wiring Data

Plug/Jack Locations

Plug/Jack Locations 7-3
IOT Plug/Jack Illustrations 7-9
Integrated Office Finisher Plug/Jack Illustrations 7-19
Office Finisher LX Plug/Jack Illustrations 7-20

Wirenets

IOT Wirenets 7-27
IIT/DADF Wirenets 7-45
Integrated Finisher Wirenets 7-51
Office Finisher LX Wirenets 7-54

Block Schematic Diagrams (BSDs)

WorkCentre 7220/7225 BSDs 7-57
Chain 1 - Input Power 7-59
Chain 2 - User Interface 7-68
Chain 3 - Machine Run Control 7-69
Chain 4 - Main Drive 7-78
Chain 5 - Document Input (DADF) 7-79
Chain 6 - Scanning and Image Processing 7-88
Chain 7 - Paper Supply 7-97
Chain 8 - Paper Transportation 7-107
Chain 9 - Xerographics 7-112
Chain 10 - Fusing/Post-Fuser Transport 7-132
Chain 12 Finishing (Integrated Finisher) 7-140
Chain 12 Finishing (Office Finisher LX) 7-148
Chain 16 - SBC 7-167
Chain 34 - FAX 7-168

Plug/Jack Locations

How to use the Plug/Jack Location List

The Plug/Jack Location List below is provided to locate plugs, jacks, or other terminating devices. Locate the desired termination device in the first column (Connector Number) of the list. Refer to the second column (Figure Number) to determine the figure number of the electrical termination device. Refer to the (Item Number) column to determine the item number in the adjacent Figure Number column. The fourth column supplies the title of the Figure or the associated component(s).

NOTE: Connectors numbered “CN” and “FS” are listed after the “P and J” connectors.

The following plug/jack locations are divided into 4 separate tables: Table 1, IOT Plug/Jack location List; Table 2, Integrated Office Finisher Plug/Jack Location list; and Table 3, Office Finisher LX Plug/Jack Location List.

IOT Plug/Jack location List

Table 1 Plug/Jack Location List

P/J No.	Figure No.	Item No.	Remarks (where to connect)
CN1	17	1	ROS
F1	2	12	DADF
P/J1	1	7	UI I/F PWB
P/J1	1	11	USB(UI)
P/J1	14	9	Main Low Voltage Power Supply
P/J1	10	1	FAX
F2	2	13	DADF
P2	1	1	USB(UI)
P/J2	1	9	UI I/F PWB
P/J2	14	7	Main Low Voltage Power Supply
P/J2	10	2	FAX
P/J3	1	8	UI I/F PWB
P/J3	14	8	Main Low Voltage Power Supply
P/J4	1	2	PWB
P/J5	1	5	PWB(UI)
P/J6	1	6	PWB(UI)
P/J6	12	7	SBC PWB
P/J7	1	3	PWB(DSP)
P/J7	12	4	SBC PWB
P/J9	5	13	Relay Connector
F10	9	9	Fuser
P/J10	1	12	UI FAX Key PWB
P/J10	15	4	GFI Breaker
P/J10	12	11	SBC PWB
P/J11	1	10	UI Function PWB
P/J11	15	5	GFI Breaker
P/J12	5	12	Main Power/FrontCover Interlock Switch, MOB ADC Assembly
P/J11	12	2	SBC PWB
P/J13	5	11	Main Power/FrontCover Interlock Switch, MOB ADC Assembly
P/J14	5	9	Main Power/FrontCover Interlock Switch, MOB ADC Assembly
P/J15	1	4	UI 10Key PWB
P/J15	5	10	Main Power Switch
P/J16	15	2	GFI Chassis
P/J17	15	3	GFI Chassis
P/J17	12	3	SBC PWB
P/J18	15	7	GFI Chassis

Table 1 Plug/Jack Location List

P/J No.	Figure No.	Item No.	Remarks (where to connect)
P/J19	15	9	GFI Chassis
P/J20	12	10	SBC PWB
P/J23	12	1	SBC PWB
P/J25	12	8	SBC PWB
P/J35	12	9	SBC PWB
P/J44	12	6	SBC PWB
P/J51	15	6	GFI Chassis
P/J52	15	13	GFI Chassis
P/J53	15	8	GFI Chassis
P/J80	15	11	GFI Chassis
P/J81	15	12	GFI Chassis
P/J90	15	20	GFI Chassis
P/J91	15	14	GFI Chassis
P/J92	15	15	GFI Chassis
P/J93	15	19	GFI Chassis
P/J94	15	18	GFI Chassis
P/J95	15	17	GFI Chassis
J97	15	16	Heater
P97	18	7	Heater
J98	15	10	Heater
P98	16	3	Heater
F100	9	8	Fuser
P/J100	8	3	POB
F101	9	7	Fuser
P/J101	6	1	Duplex Wait Sensor
F102	5	4	Main Power/FrontCover Interlock Switch, MOB ADC Assembly
P/J102	6	2	Duplex Cover Switch
P/J102	18	5	Tray 3 Paper Size Sensor(2TM)
F103	5	3	Main Power/FrontCover Interlock Switch, MOB ADC Assembly
P/J103	6	13	MSI Paper Size Sensor
P/J103	18	6	Tray 4 Paper Size Sensor(2TM)
P/J104	6	12	MSI No Paper Sensor
P/J104	19	4	Tray Module L/H Cover Switch(2TM)
P/J105	8	2	Registration Sensor
P/J107	7	2	Tray1/2 Feeder
P/J108	7	1	Tray 1 No Paper Sensor
P/J108	19	6	Tray 3 Feed Out Sensor(2TM)
P/J109	7	3	Tray1/2 Feeder
P/J110	7	4	Tray 2 Nudger Level Sensor

Table 1 Plug/Jack Location List

P/J No.	Figure No.	Item No.	Remarks (where to connect)
P/J110	18	4	Tray 3 Nudger Level Sensor(2TM)
P/J111	6	5	Exit 2 Sensor
P/J111	18	3	Tray 3 No Paper Sensor(2TM)
P/J112	6	7	L/H High Cover Switch
P/J113	8	4	Tray 2 Feed Out Sensor
P/J114	8	11	L/H Low Cover Switch
P/J114	18	1	Tray 4 No Paper Sensor(2TM)
P/J115	11	9	K Drum Sensor
P/J115	18	2	Tray 4 Nudger Level Sensor
P/J116	9	2	Exit/OCT Home Position Sensor
P/J116	19	7	Tray 4 Feed Out Sensor(2TM)
P/J117	11	1	FC Drum Sensor
P/J118	16	17	Tray 1 Paper Size Sensor
P/J119	16	16	Tray 2 Paper Size Sensor
P/J120	16	15	CRU Reader (Y)
P/J121	16	14	CRU Reader (M)
P/J122	16	13	CRU Reader (C)
P/J123	16	12	CRU Reader (K)
P/J124	16	4	Toner CRUM Coupler Assembly (Y)
P/J125	16	5	Toner CRUM Coupler Assembly (M)
P/J126	16	6	Toner CRUM Coupler Assembly (C)
P/J127	16	7	Toner CRUM Coupler Assembly (K)
P/J128	5	15	Main Power/FrontCover Interlock Switch, MOB ADC Assembly
P/J129	5	14	Main Power/FrontCover Interlock Switch, MOB ADC Assembly
P/J130	5	1	MOB ADC Sensor In
P/J131	5	18	Environment Sensor (MOB ADC Assembly)
P/J132	5	2	MOB ADC Sensor Out
P/J134	9	10	Fuser
P/J160	9	6	Fuser
P/J161	9	5	L/H Cover Interlock Switch 2
P/J162	5	6	Main Power/FrontCover Interlock Switch, MOB ADC Assembly
P/J163	5	5	Main Power/FrontCover Interlock Switch, MOB ADC Assembly
P/J170	5	7	Main Power/FrontCover Interlock Switch, MOB ADC Assembly
P/J201	11	3	Drum/IBT Drive Motor
P/J202	11	4	Drum/IBT Drive Motor
P/J203	6	11	Exit, MSI

Table 1 Plug/Jack Location List

P/J No.	Figure No.	Item No.	Remarks (where to connect)
P/J204	8	1	L/H Cover
P/J205	6	6	Exit, MSI
P/J206	11	8	Drive Motor
P/J207	11	7	Drive Motor
P/J208	11	11	
P/J209	11	10	
P/J210	11	5	Fuser Exhaust Fan
P/J211	11	12	
P/J212	6	4	Exit, MSI
P/J213	13	7	MCU PWB
P/J214	11	17	
P/J215	11	16	
P/J216	11	14	LV Rear Intake Fan
P/J217	16	8	
P/J218	16	9	
P/J219	16	10	
P/J220	16	11	
P/J221	6	8	Exit, MSI
P/J222	9	1	Exit 1 OCT Motor
P/J222	19	14	Tray 3 Feed/Lift Motor(2TM)
P/J223	7	6	Tray 1 Feed/Lift Motor
P/J223	19	13	Tray 4 Feed/Lift Motor(2TM)
P/J224	7	5	Tray 2 Feed/Lift Motor
P/J224	19	15	TM Take Away Motor(2TM)
P/J225	11	6	
P/J226	11	2	
P/J227	11	15	
P/J228	5	17	MOB ADC Shutter Solenoid
P/J300	12	16	SBC PWB
P/J320	12	13	SBC PWB
P/J328	12	15	SBC PWB
P/J336	12	20	SBC PWB
P/J343	12	18	SBC PWB
P/J352	12	17	SBC PWB
P/J390	12	19	SBC PWB
P/J400	13	1	MCU PWB
LD_P/J401	17	2	ROS
P/J401	13	4	MCU PWB
LD_P/J402	17	3	ROS
P/J402	13	5	MCU PWB
LD_P/J403	17	4	ROS

Table 1 Plug/Jack Location List

P/J No.	Figure No.	Item No.	Remarks (where to connect)
P/J403	13	6	MCU PWB
LD_P/J404	17	5	ROS
P/J404	13	12	MCU PWB
LD_P/J405	17	6	ROS
P/J405	13	13	MCU PWB
P/J406	13	14	MCU PWB
P/J407	13	9	MCU PWB
P/J408	13	11	MCU PWB
P/J409	13	10	MCU PWB
P/J410	13	24	MCU PWB
P/J411	13	23	MCU PWB
P/J412	13	26	MCU PWB
P/J413	13	22	MCU PWB
P/J414	13	25	MCU PWB
P/J415	13	16	MCU PWB
P/J416	13	15	MCU PWB
P/J417	13	8	MCU PWB
P/J419	13	2	MCU PWB
P/J420	13	21	MCU PWB
P/J421	13	19	MCU PWB
P/J422	13	18	MCU PWB
P423	13	17	MCU PWB
J423	19	3	2TM
P/J425	13	3	MCU PWB
P/J426	13	20	MCU PWB
P/J426	17	7	PWB(ROS)
P/J501	14	5	
P/J502	14	3	Main LVPS
P/J503	14	1	
P/J504	14	6	
P/J505	14	4	
P/J506	14	2	
P/J520	16	2	HVPS
P/J521	16	1	
P/J541	19	1	Tray Module PWB
P/J548	19	18	Tray Module PWB
P/J553	19	17	
P/J554	19	16	Tray Module PWB
P/J555	19	2	Tray Module PWB
P/J600	8	9	Relay Connector
P/J601	8	10	Relay Connector

Table 1 Plug/Jack Location List

P/J No.	Figure No.	Item No.	Remarks (where to connect)
P/J602	8	13	Relay Connector
P/J603	8	12	Relay Connector
P/J604	8	6	Relay Connector
P/J605	6	10	Relay Connector
P/J606	8	8	Relay Connector
P/J607	11	18	Relay Connector
P/J608	6	9	Relay Connector
P/J609	8	5	Relay Connector
P/J610	8	7	Relay Connector
P/J611	5	16	Relay Connector
DP/DJ612	9	11	Fuser
P/J613	9	3	Relay Connector
P/J614	6	14	Relay Connector
P/J615	6	3	Relay Connector
P/J620	9	4	Relay Connector
P/J621	11	13	Relay Connector
P/J622	5	8	Relay Connector
P/J662	19	9	Relay Connector
P/J663	19	11	Relay Connector
P/J671	19	10	Relay Connector
P/J672	19	8	Relay Connector
P/J673	19	12	Relay Connector
P/J674	19	5	Relay Connector
P/J700	4	4	IIT
P/J710	4	18	IIT
P/J720	4	14	IIT
P/J721	4	3	IIT
P/J722	4	13	IIT
P/J723	4	2	IIT
P/J724	4	19	IIT
P/J751	3	12	DADF
P/J752	3	11	DADF
P/J753	3	10	DADF
P/J754	3	4	DADF
P/J755	3	9	DADF
P/J756	3	3	DADF
P/J757	3	1	DADF PWB
P/J758	3	2	DADF PWB
J759	3	14	
J760	3	13	
P/J761	2	18	DADF PWB

Table 1 Plug/Jack Location List

P/J No.	Figure No.	Item No.	Remarks (where to connect)
P/J762	2	3	
P/J763	2	2	
P/J764	2	1	DADF PWB
P/J765	2	17	
P/J766	2	10	Relay Connector
P/J767	2	4	
P/J768	2	5	
P/J769	2	6	
P/J770	2	11	Relay Connector
P/J771	3	5	
P/J772	3	6	DADF PWB
P/J773	2	7	
P/J774	2	9	
P/J775	2	8	
P/J776	3	8	
P/J777	3	7	
P/J778	2	15	
P/J779	2	14	
P/J780	2	16	
P/J791	2	19	
P/J903	15	1	Relay Connector
P930/J96	4	1	
P/J931	4	8	Heater
P/J932	4	9	Heater
P/J1323	12	12	SBC PWB
P/J1324	12	14	SBC PWB
P/J4502	12	5	SBC PWB
P/J7001	4	21	LED Lamp
P/J7191	4	17	IIT
P/J7192	4	5	IIT
P/J7251	4	12	IIT
P/J7252	4	11	
P/J7253	4	10	
P/J7254	4	6	
P/J7256	4	7	
P/J7258	4	20	Carriage Motor
P/J7501	4	16	IIT
P/J7502	4	15	IIT

Integrated Office Finisher Plug/Jack Location List

Table 2 Integrated Office Finisher Plug/Jack Location List

Connector Number	Figure Number	Item Number	Figure Title
P/J8700	2	2	Integrated Office Finisher PWB Location
P/J8701	2	1	Integrated Office Finisher PWB Location
P/J8702	2	11	Integrated Office Finisher PWB Location
P/J8703	2	10	Integrated Office Finisher PWB Location
P/J8704	2	13	Integrated Office Finisher PWB Location
P/J8705	2	12	Integrated Office Finisher PWB Location
P/J8706	2	8	Integrated Office Finisher PWB Location
P/J8707	2	3	Integrated Office Finisher PWB Location
P/J8708	2	17	Integrated Office Finisher PWB Location
P/J8709	2	16	Integrated Office Finisher PWB Location
P/J8710	2	9	Integrated Office Finisher PWB Location
P/J8711	2	4	Integrated Office Finisher PWB Location
P/J8721	3	2	Integrated Office Finisher Bottom Location
P/J8722	3	1	Integrated Office Finisher Bottom Location
P/J8723	3	6	Integrated Office Finisher Bottom Location
P/J8724	1	1	Integrated Office Finisher Front Location
P/J8725	3	11	Integrated Office Finisher Bottom Location
P/J8726	1	7	Integrated Office Finisher Front Location
P/J8727	1	9	Integrated Office Finisher Front Location
P/J8728	1	8	Integrated Office Finisher Front Location
P/J8729	1	6	Integrated Office Finisher Front Location
P/J8730	1	2	Integrated Office Finisher Front Location
P/J8731	1	4	Integrated Office Finisher Front Location
P/J8732	1	3	Integrated Office Finisher Front Location
P/J8733	2	14	Integrated Office Finisher PWB Location
P/J8734	2	15	Integrated Office Finisher PWB Location
P/J8735	1	5	Integrated Office Finisher Front Location
P/J8736	3	5	Integrated Office Finisher Bottom Location
J8737A	3	9	Integrated Office Finisher Bottom Location
J8737B	3	9	Integrated Office Finisher Bottom Location
J8738A	3	10	Integrated Office Finisher Bottom Location
J8738B	3	10	Integrated Office Finisher Bottom Location
P/J8739	2	7	Integrated Office Finisher PWB Location
P/J8740	2	5	Integrated Office Finisher PWB Location
P/J8741	2	6	Integrated Office Finisher PWB Location
J8742A	3	7	Integrated Office Finisher Bottom Location
J8742B	3	8	Integrated Office Finisher Bottom Location
CN3	3	4	Integrated Office Finisher Bottom Location

Table 2 Integrated Office Finisher Plug/Jack Location List

Connector Number	Figure Number	Item Number	Figure Title
CN4	3	3	Integrated Office Finisher Bottom Location

Office Finisher LX Plug/Jack Location List

Table 3 Office Finisher (LX) Plug/Jack List

Connector Number	Figure Number	Item Number	Figure Title
P/J590	3	15	Finisher (LX) Rear
P/J591	3	14	Finisher (LX) Rear
J8860	1	1	Finisher (LX) Horizontal Transport
J8861	1	4	Finisher (LX) Horizontal Transport
P/J8862	1	2	Finisher (LX) Horizontal Transport
J8863	1	7	Finisher (LX) Horizontal Transport
P8863	1	5	Finisher (LX) Horizontal Transport
J8864	1	8	Finisher (LX) Horizontal Transport
J8865	1	10	Finisher (LX) Horizontal Transport
J8866	1	6	Finisher (LX) Horizontal Transport
P/J8867	1	9	Finisher (LX) Horizontal Transport
J8868	4	4	Finisher (LX) Eject
J8869	4	3	Finisher (LX) Eject
J8870	3	24	Finisher (LX) Rear
J8871	3	23	Finisher (LX) Rear
J8872	3	21	Finisher (LX) Rear
J8873	3	2	Finisher (LX) Rear
J8874	3	1	Finisher (LX) Rear
J8875	3	22	Finisher (LX) Rear
P/J8876	4	5	Finisher (LX) Eject
P/J8877	3	20	Finisher (LX) Rear
P/J8878	3	7	Finisher (LX) Rear
P/J8879	3	5	Finisher (LX) Rear
J8880	4	7	Finisher (LX) Eject
J8881	4	11	Finisher (LX) Eject
J8882	4	6	Finisher (LX) Eject
P/J8883	4	8	Finisher (LX) Eject
P/J8884	4	10	Finisher (LX) Eject
J8885	2	7	Finisher (LX) Front
J8886	2	6	Finisher (LX) Front
J8887	2	5	Finisher (LX) Front
P/J8888	4	9	Finisher (LX) Eject
J8889	3	3	Finisher (LX) Rear

Table 3 Office Finisher (LX) Plug/Jack List

Connector Number	Figure Number	Item Number	Figure Title
J8890	3	4	Finisher (LX) Rear
J8891	4	2	Finisher (LX) Eject
P/J8892	5	1	Booklet Maker Stapler Assembly
P/J8893	5	2	Booklet Maker Stapler Assembly
J8894	6	1	Booklet Maker PWB
J8895	6	3	Booklet Maker PWB
P/J8896	5	7	Booklet Maker Stapler Assembly
J8897	5	4	Booklet Maker Stapler Assembly
J8898	5	5	Booklet Maker Stapler Assembly
J8899	5	6	Booklet Maker Stapler Assembly
J8900	5	8	Booklet Maker Stapler Assembly
J8901	5	3	Booklet Maker Stapler Assembly
P/J8903	2	2	Finisher (LX) Front
P8903	4	1	Finisher (LX) Eject
J8904	2	3	Finisher (LX) Front
P/J8905	2	4	Finisher (LX) Front
P/J8906	6	2	Booklet Maker PWB
J8980	3	19	Finisher (LX) Rear
P/J8981	3	10	Finisher (LX) Rear
J8982	3	18	Finisher (LX) Rear
P/J8983	3	9	Finisher (LX) Rear
J8984	3	6	Finisher (LX) Rear
J8985	6	4	Booklet Maker PWB
P8985	3	17	Finisher (LX) Rear
P/J8986	3	8	Finisher (LX) Rear
J8987	1	3	Finisher (LX) Horizontal Transport
P8987	3	16	Finisher (LX) Rear
P/J8988	3	11	Finisher (LX) Rear
J8989	3	13	Finisher (LX) Rear
P/J8990	3	12	Finisher (LX) Rear
P/J8991	6	9	Booklet Maker PWB
P/J8992	6	7	Booklet Maker PWB
P/J8993	6	6	Booklet Maker PWB
P/J8994	6	5	Booklet Maker PWB
P/J8995	6	8	Booklet Maker PWB

IOT Plug/Jack Illustrations

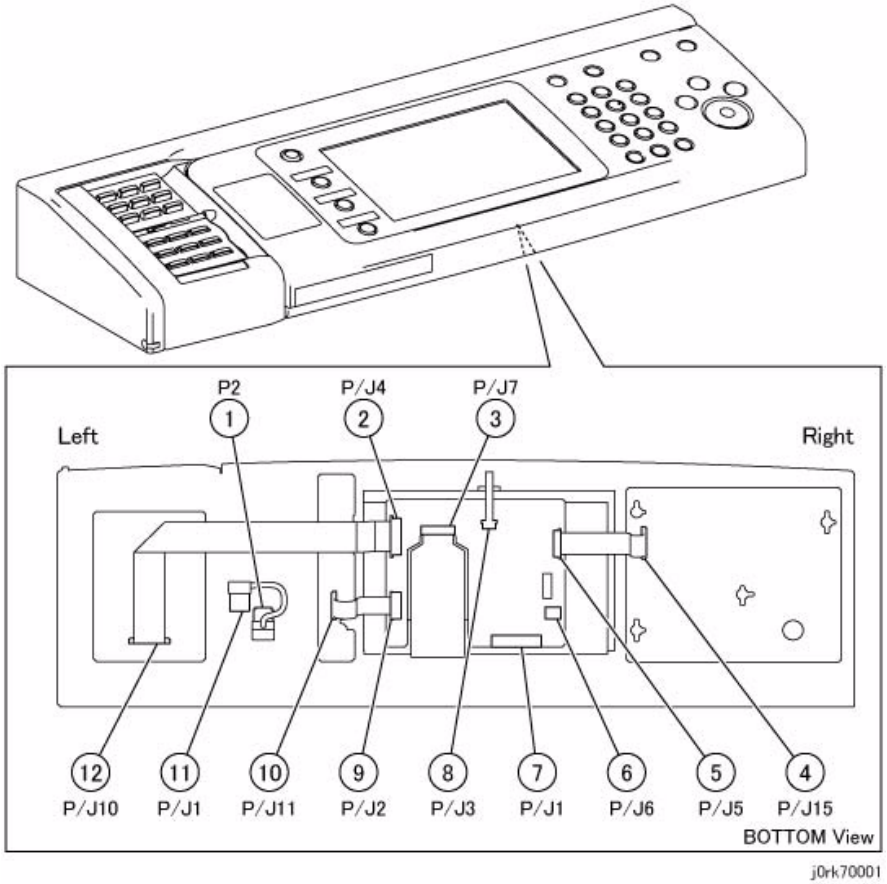

Figure 1 UI

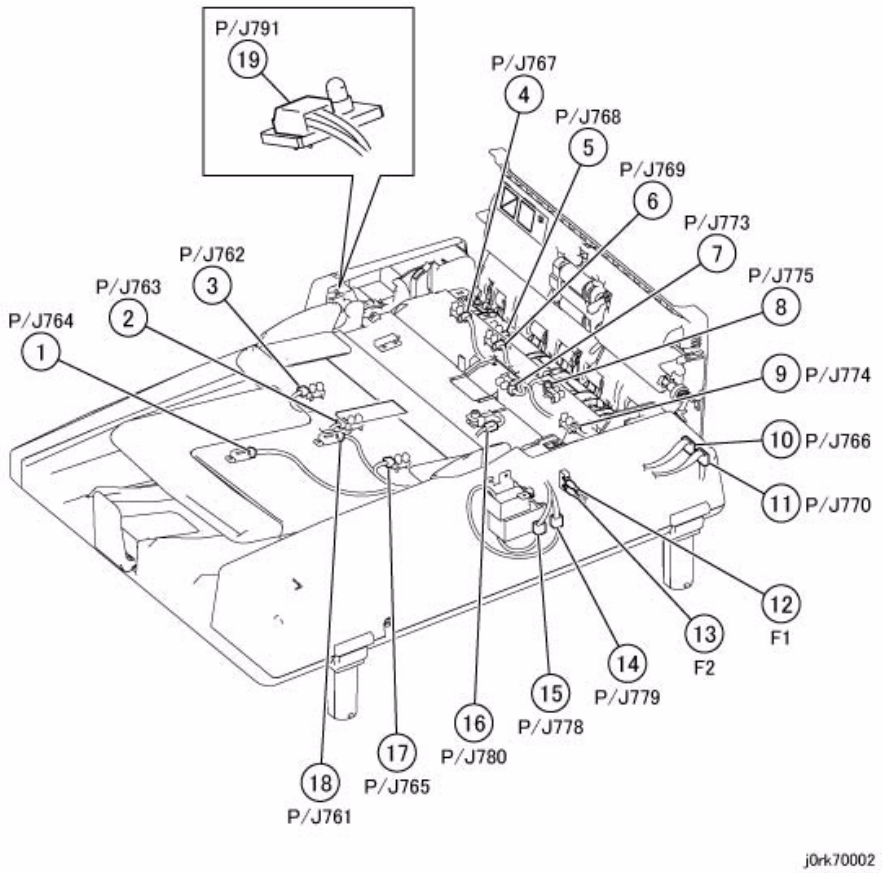

Figure 2 DADF Rear Location

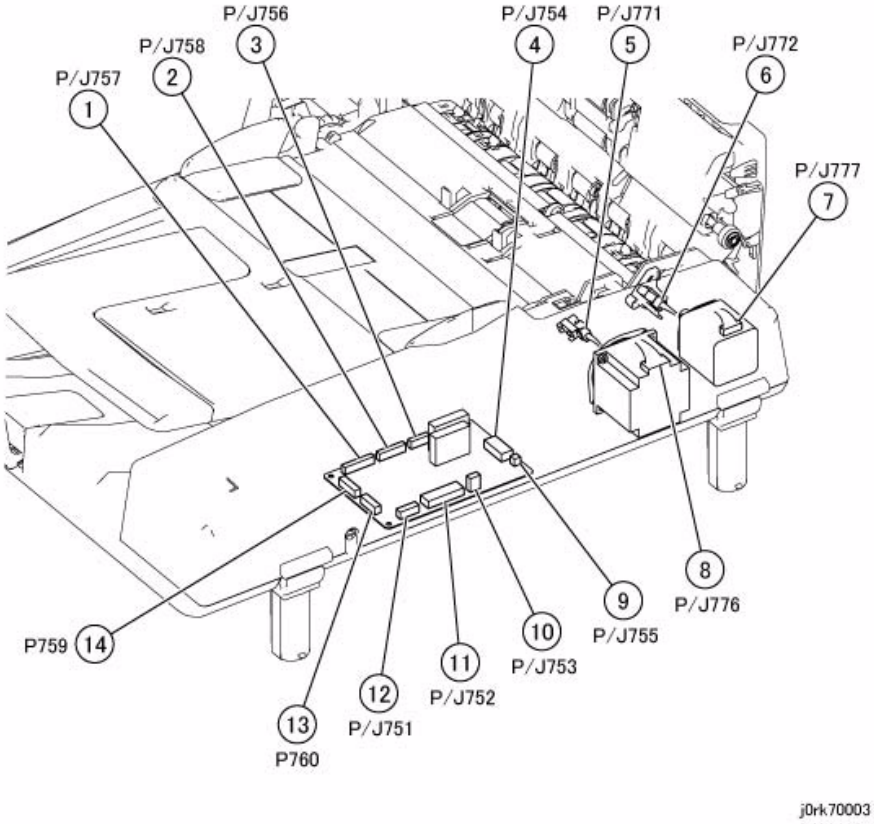

Figure 3 DADF PWB

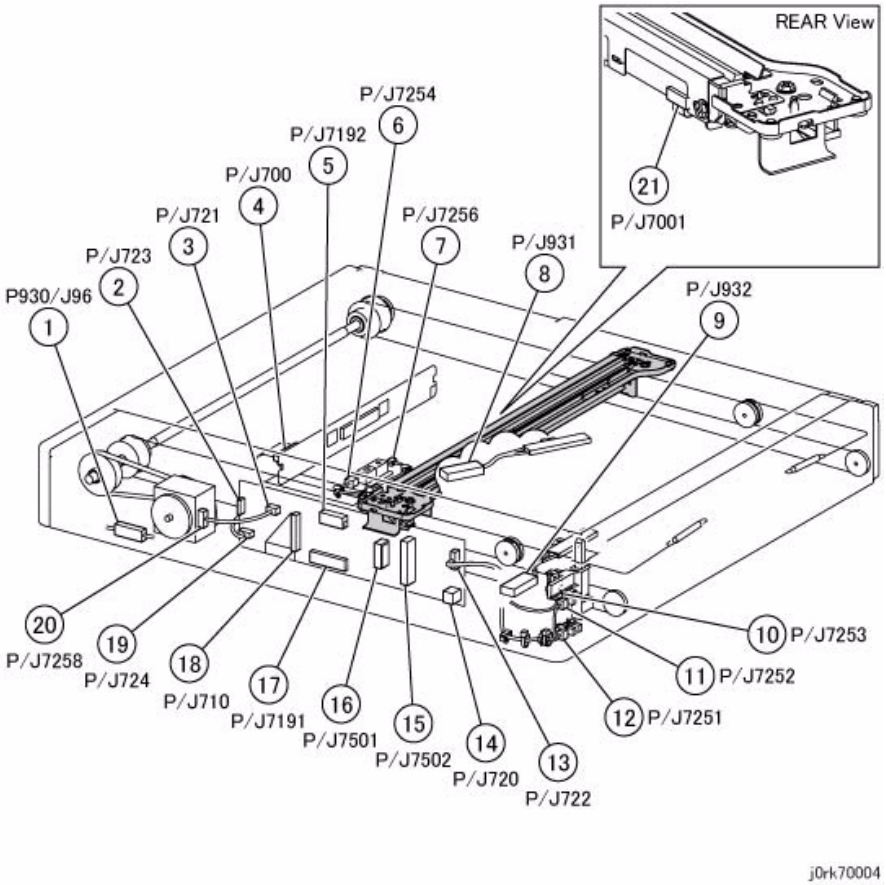

Figure 4 IIT

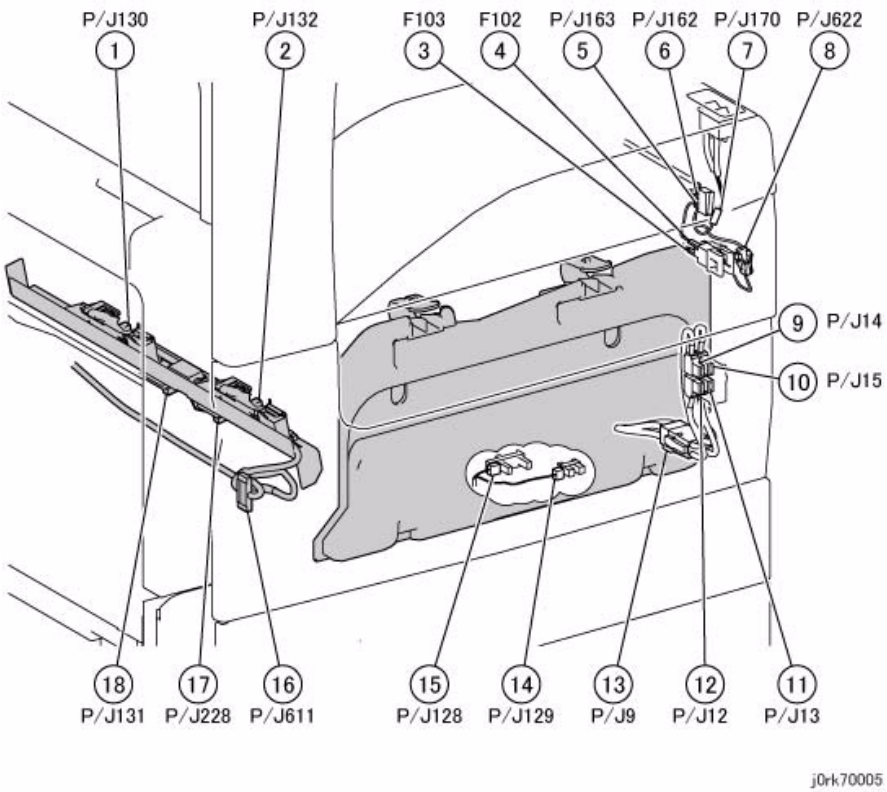

Figure 5 Main Power/FrontCover Interlock Switch, MOB ADC Assembly

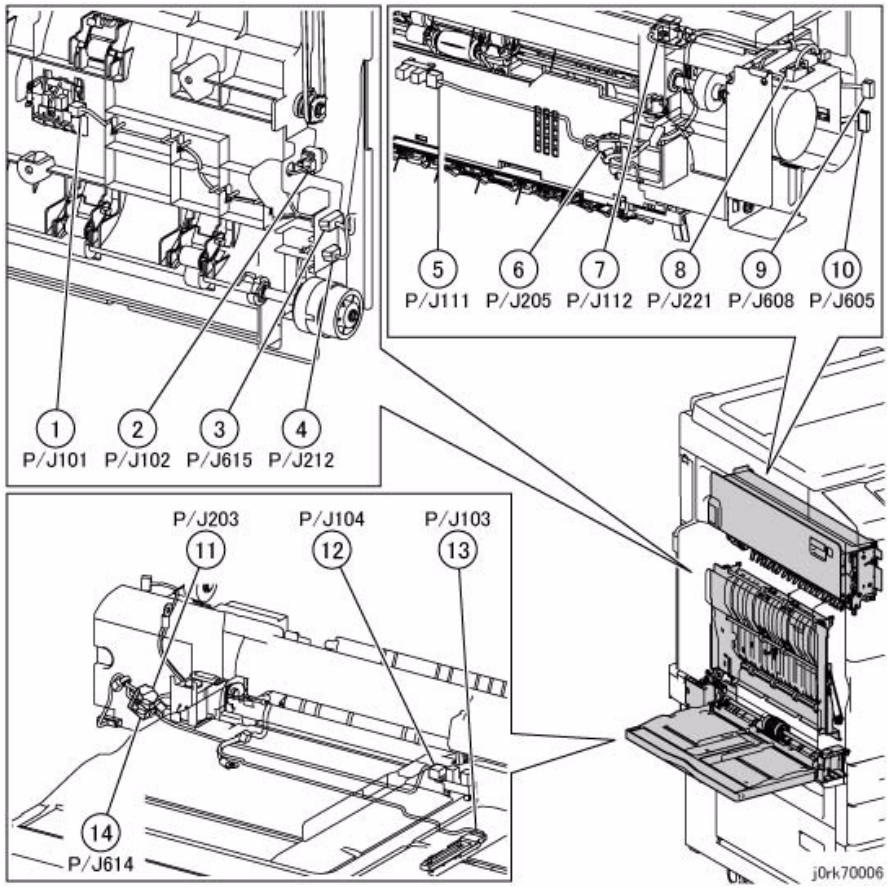

Figure 6 Exit, MSI

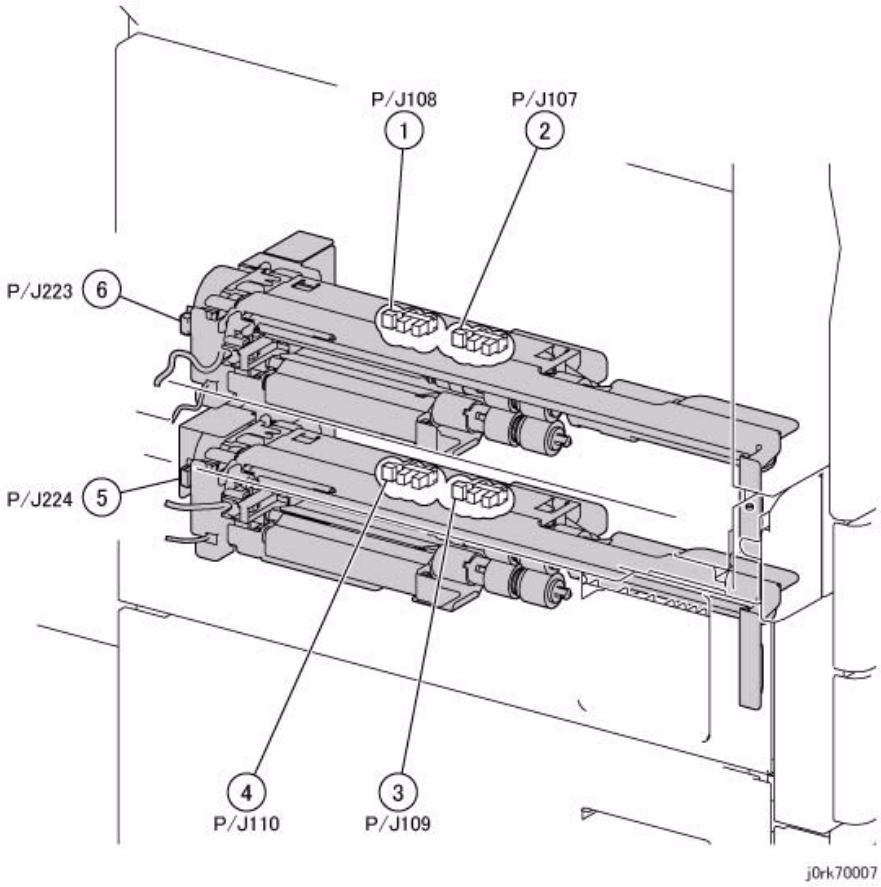

Figure 7 Tray1/2 Feeder

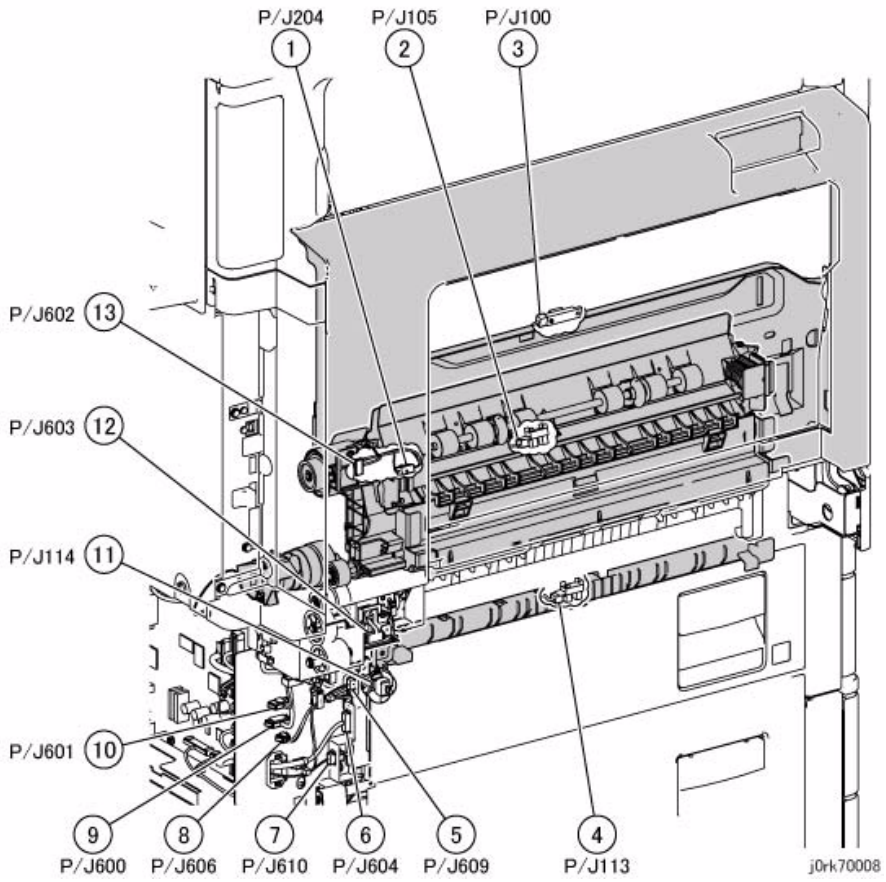

Figure 8 L/H Cover

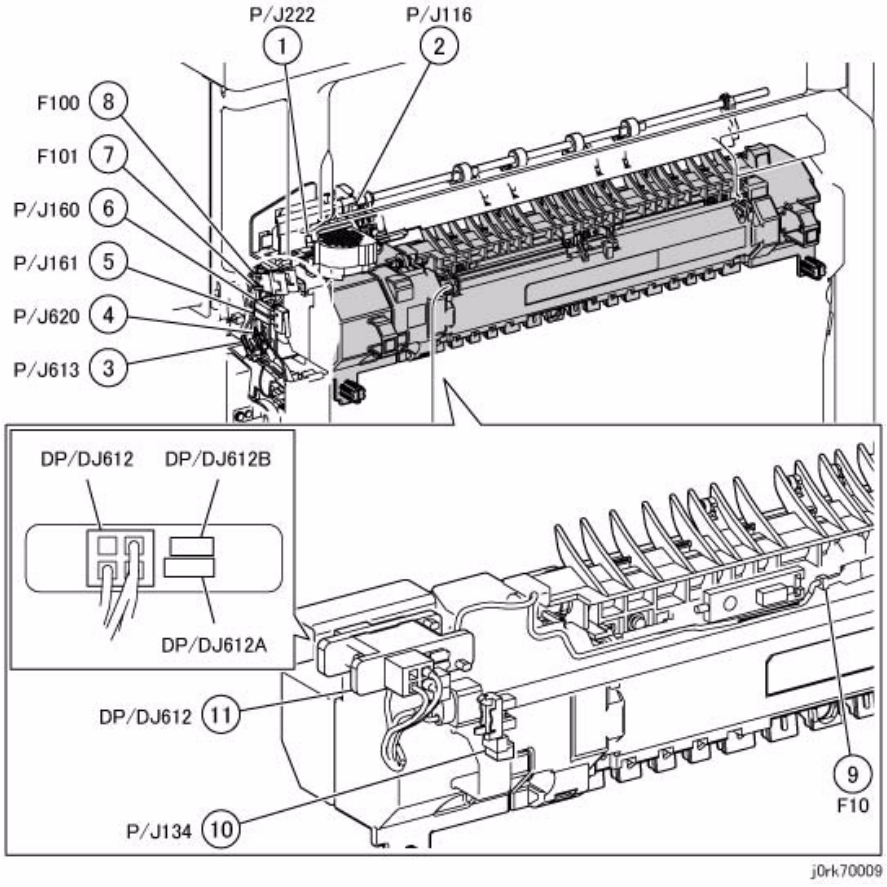

Figure 9 Fuser

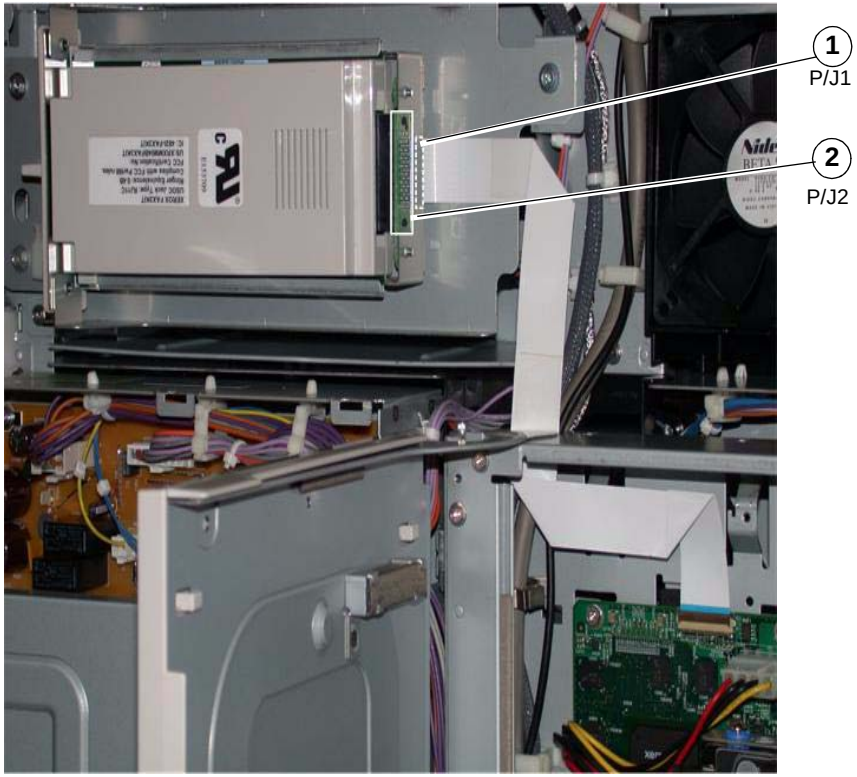

Figure 10 Fax

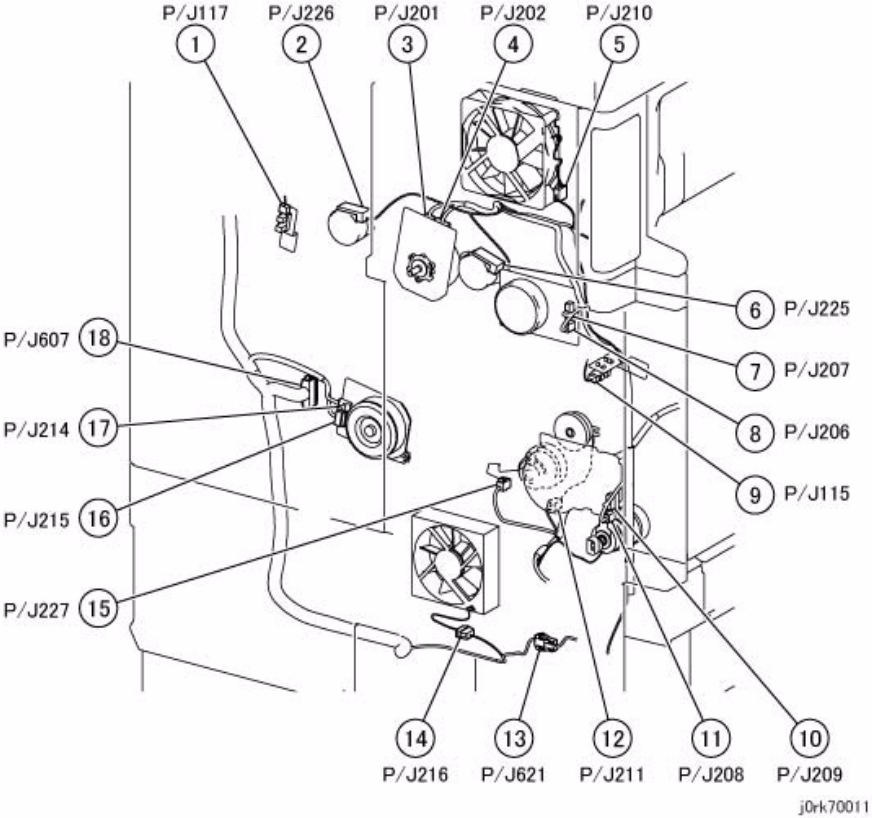

Figure 11 Dev, Drive Motor

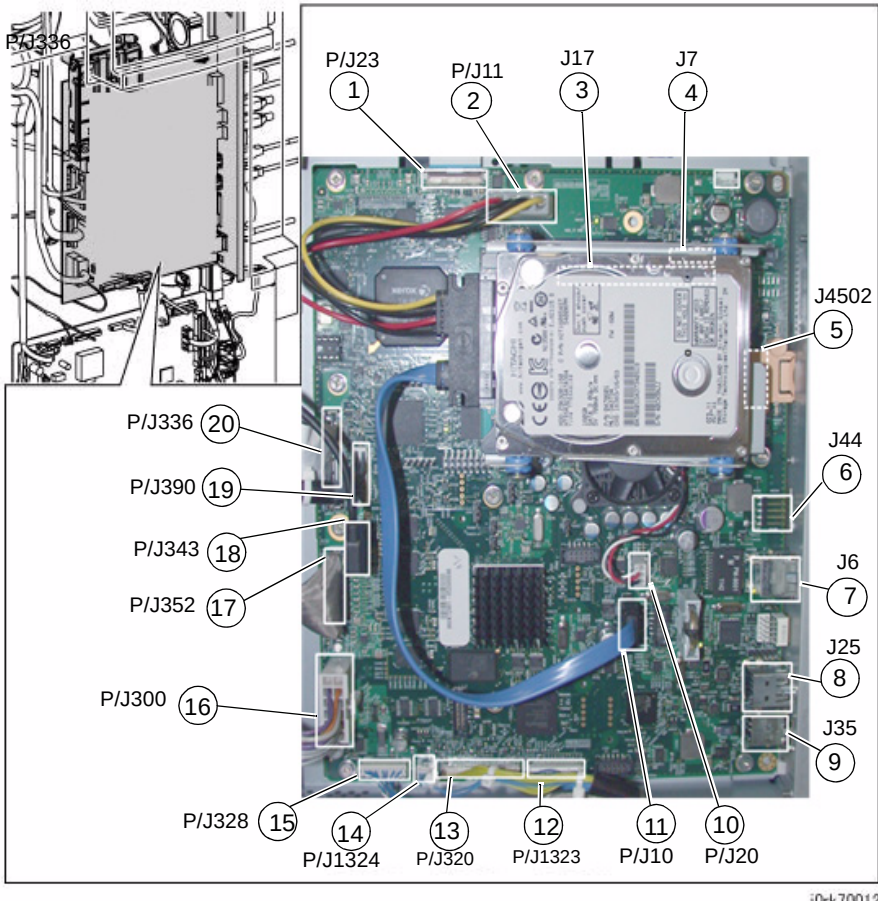

Figure 12 SBC PWB

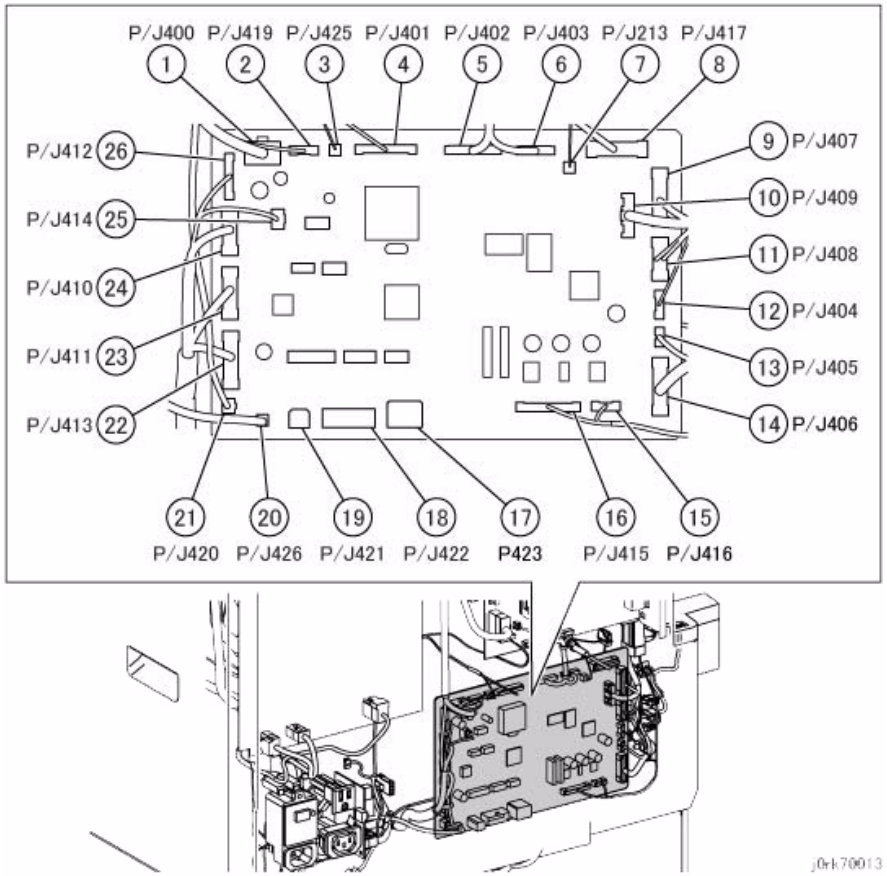

Figure 13 MCU PWB

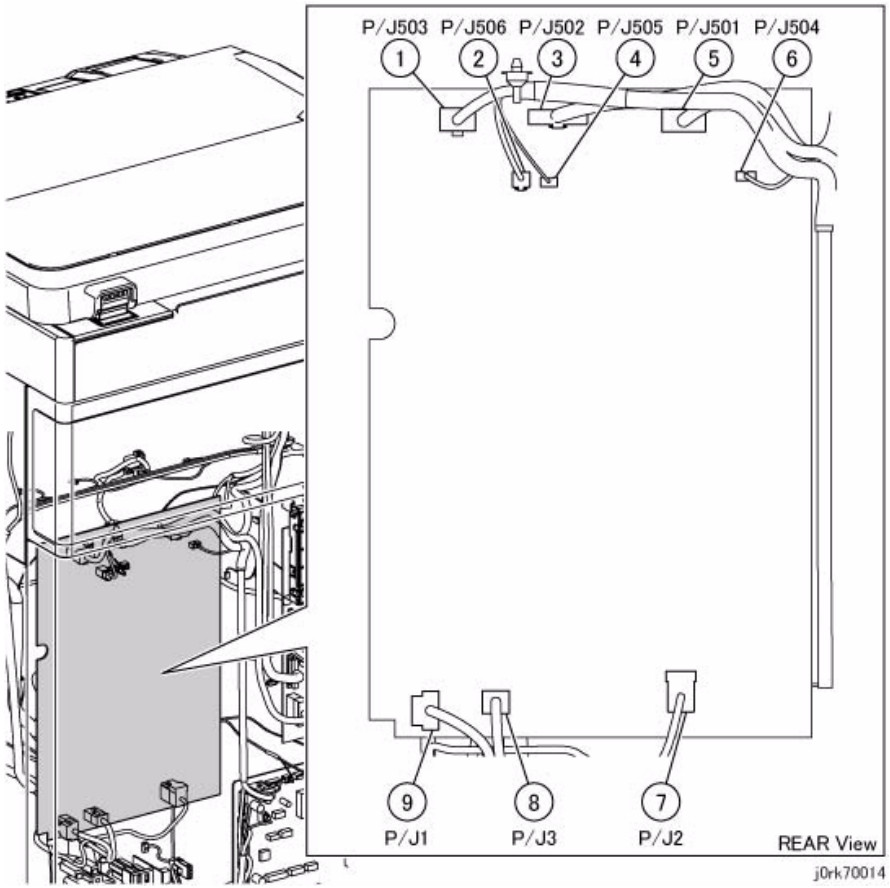

Figure 14 LVPS PWB

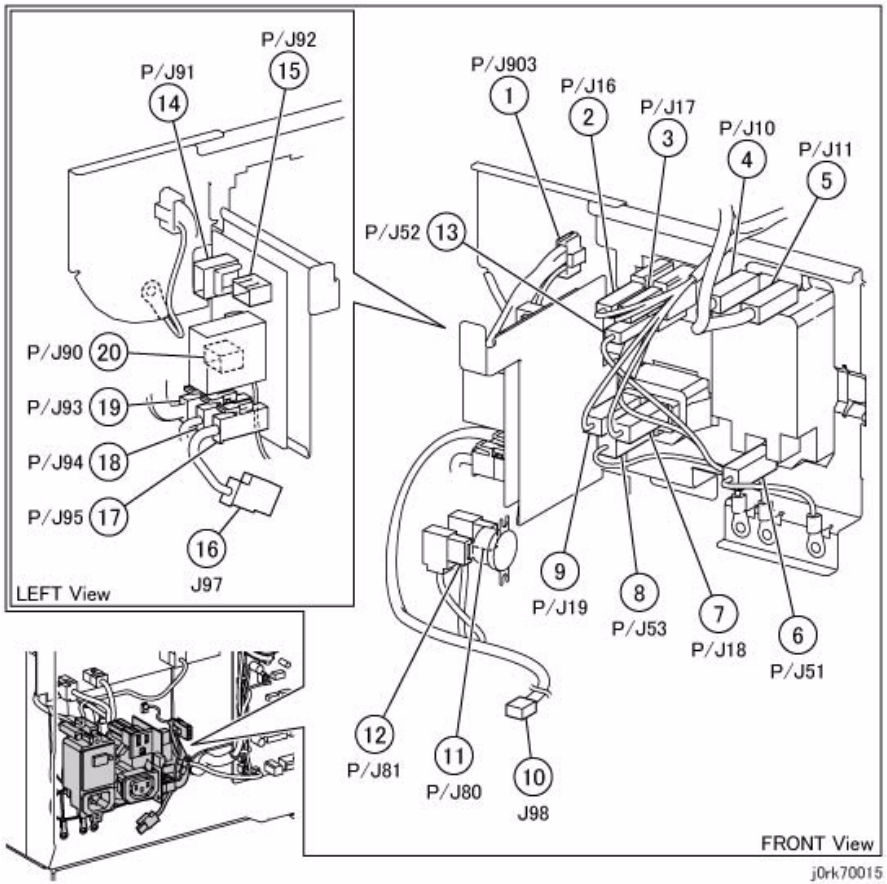

Figure 15 GFI Chassis

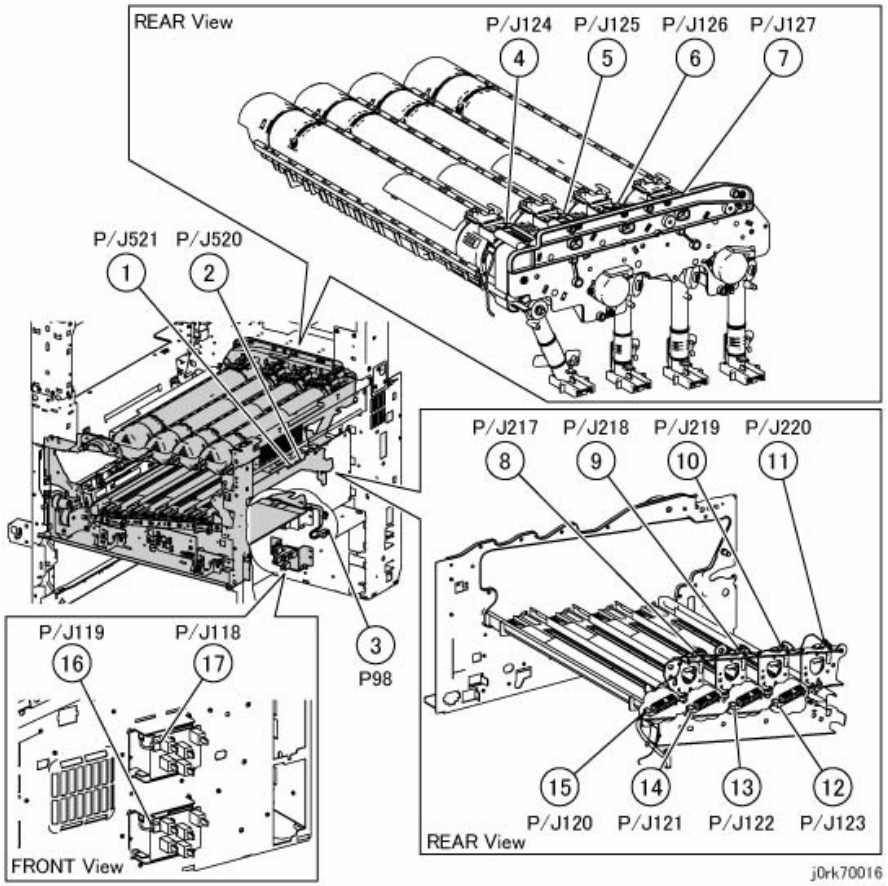

Figure 16 Paper Size Sensor, LPH Unit

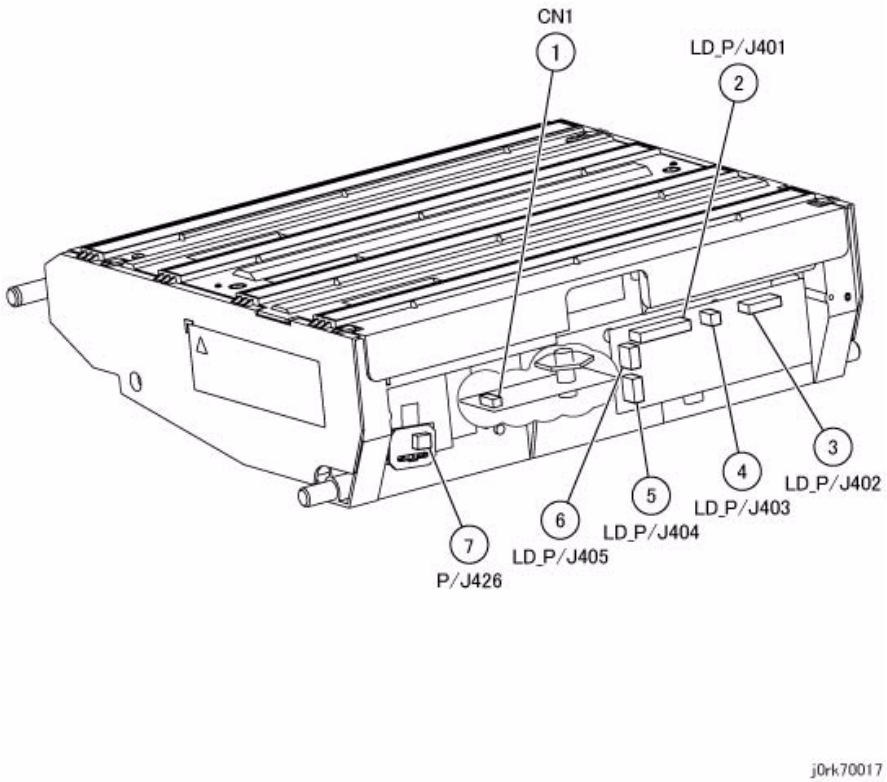

Figure 17 ROS

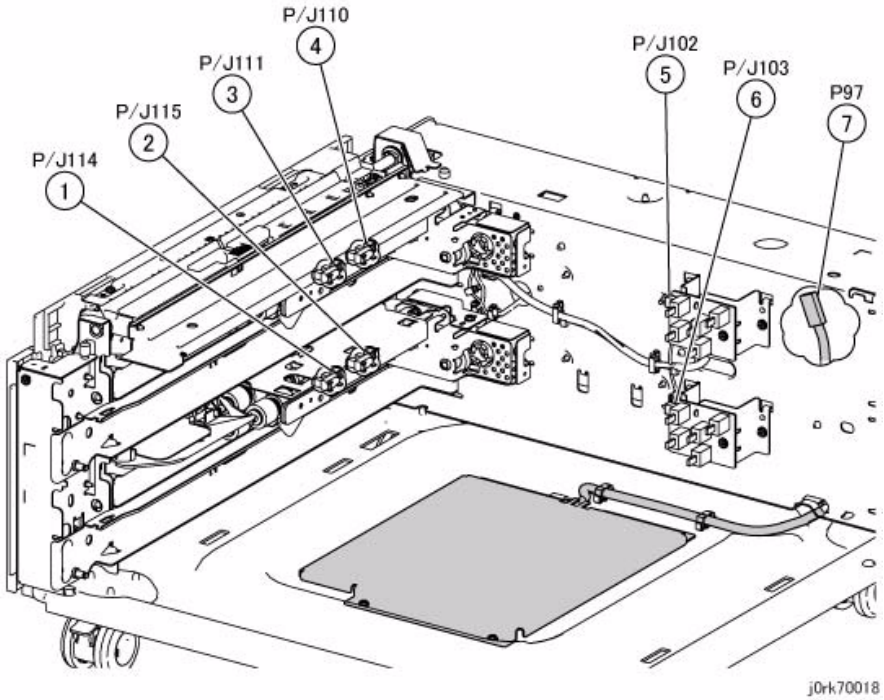

Figure 18 Feed Out Sensor, Paper Size Sensor, Heater

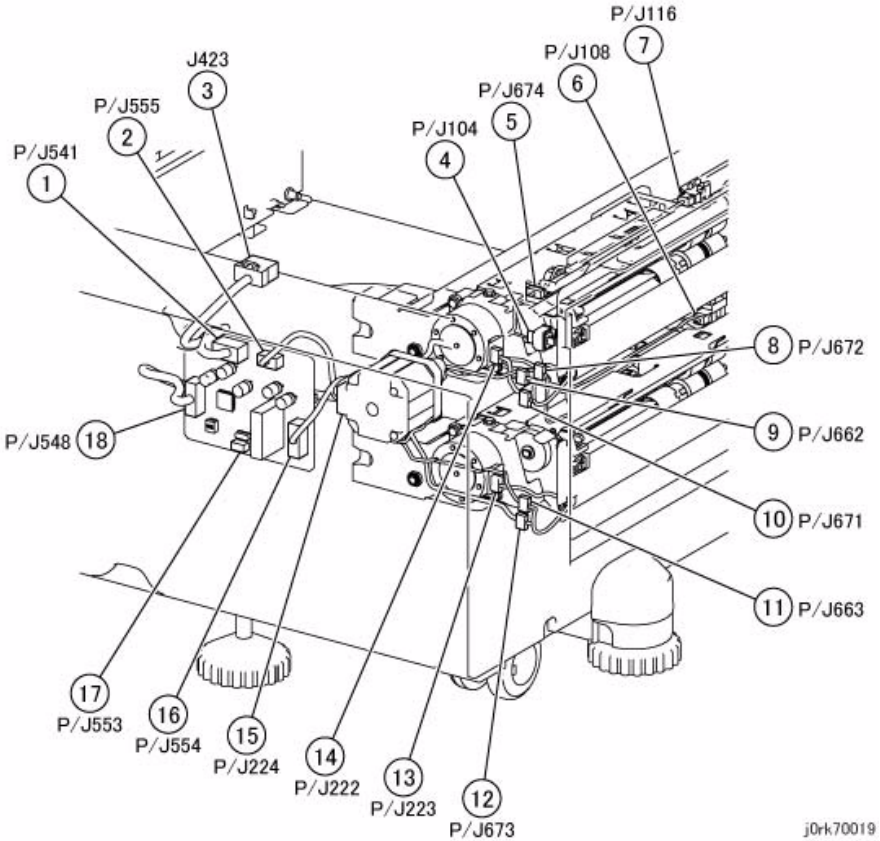

Figure 19 Tray3/4 Feeder, Tray Module PWB, TM Take Away Motor

Integrated Office Finisher Plug/Jack Illustrations

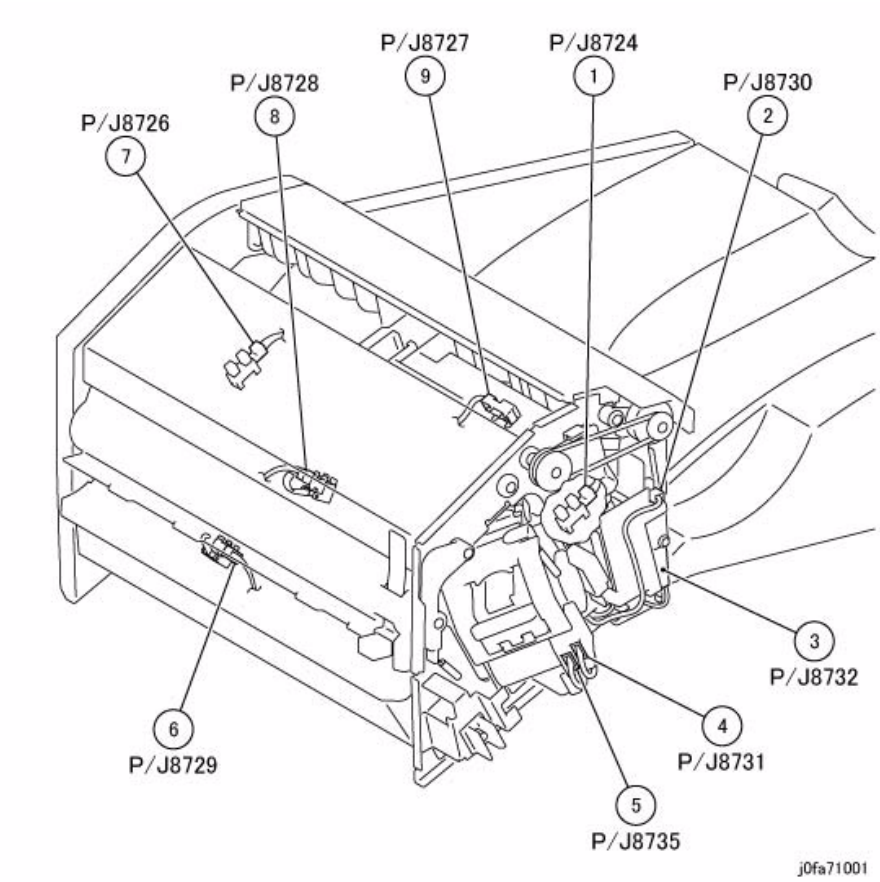

Figure 1 Integrated Office Finisher Front Location

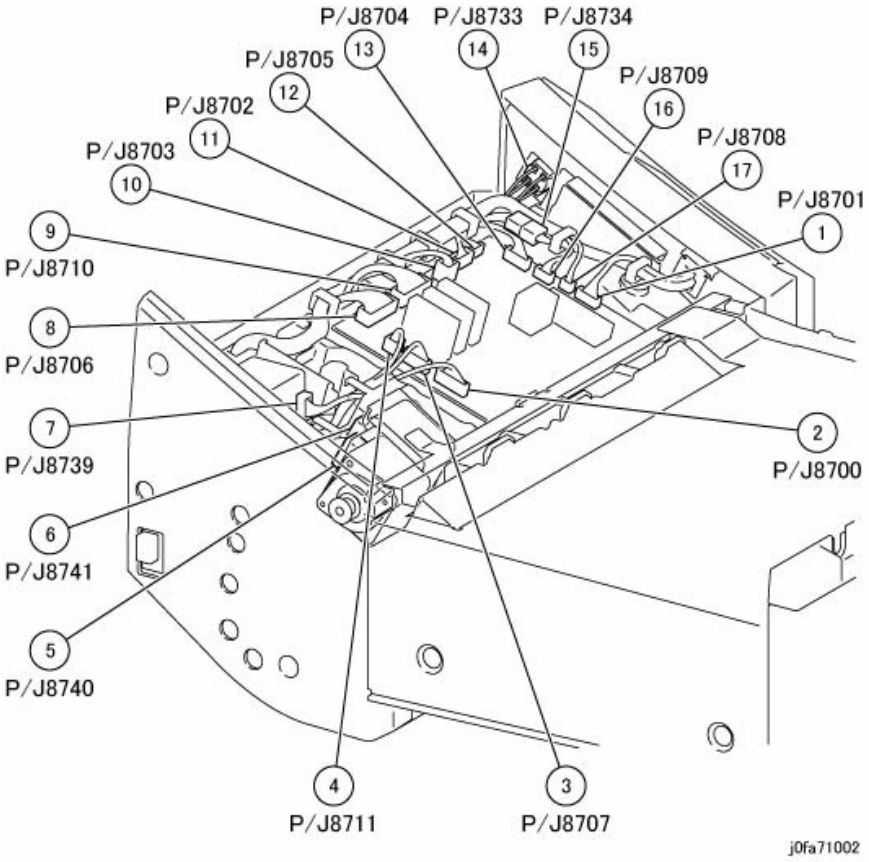

Figure 2 Integrated Office Finisher PWB Location

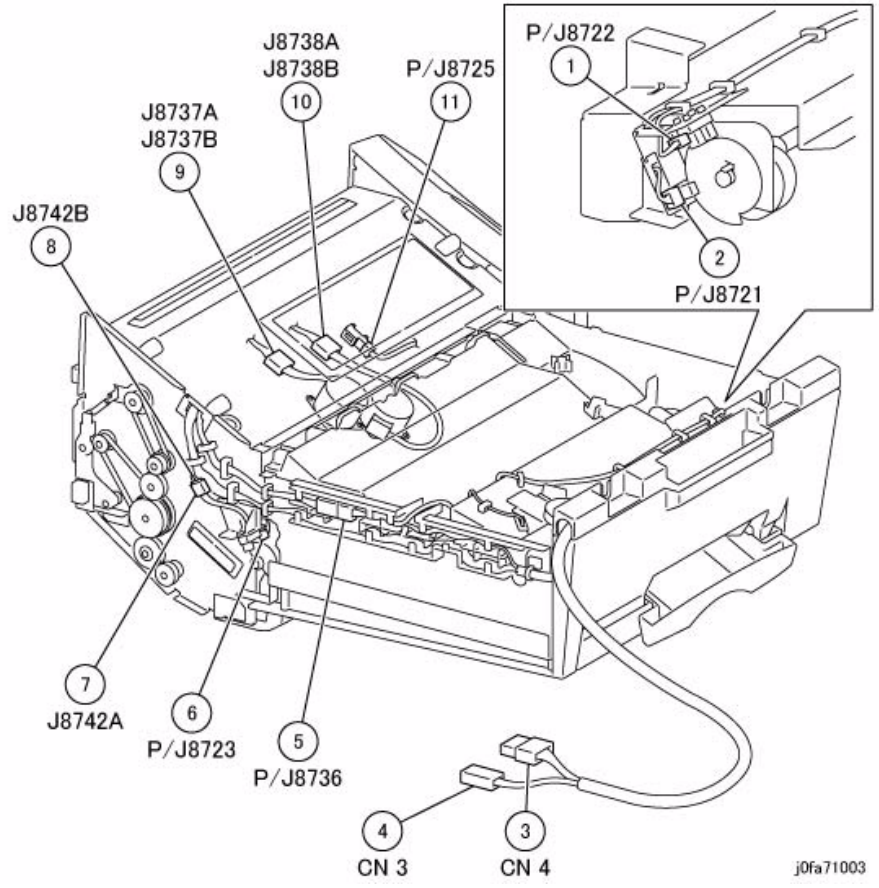

Figure 3 Integrated Office Finisher Bottom Location

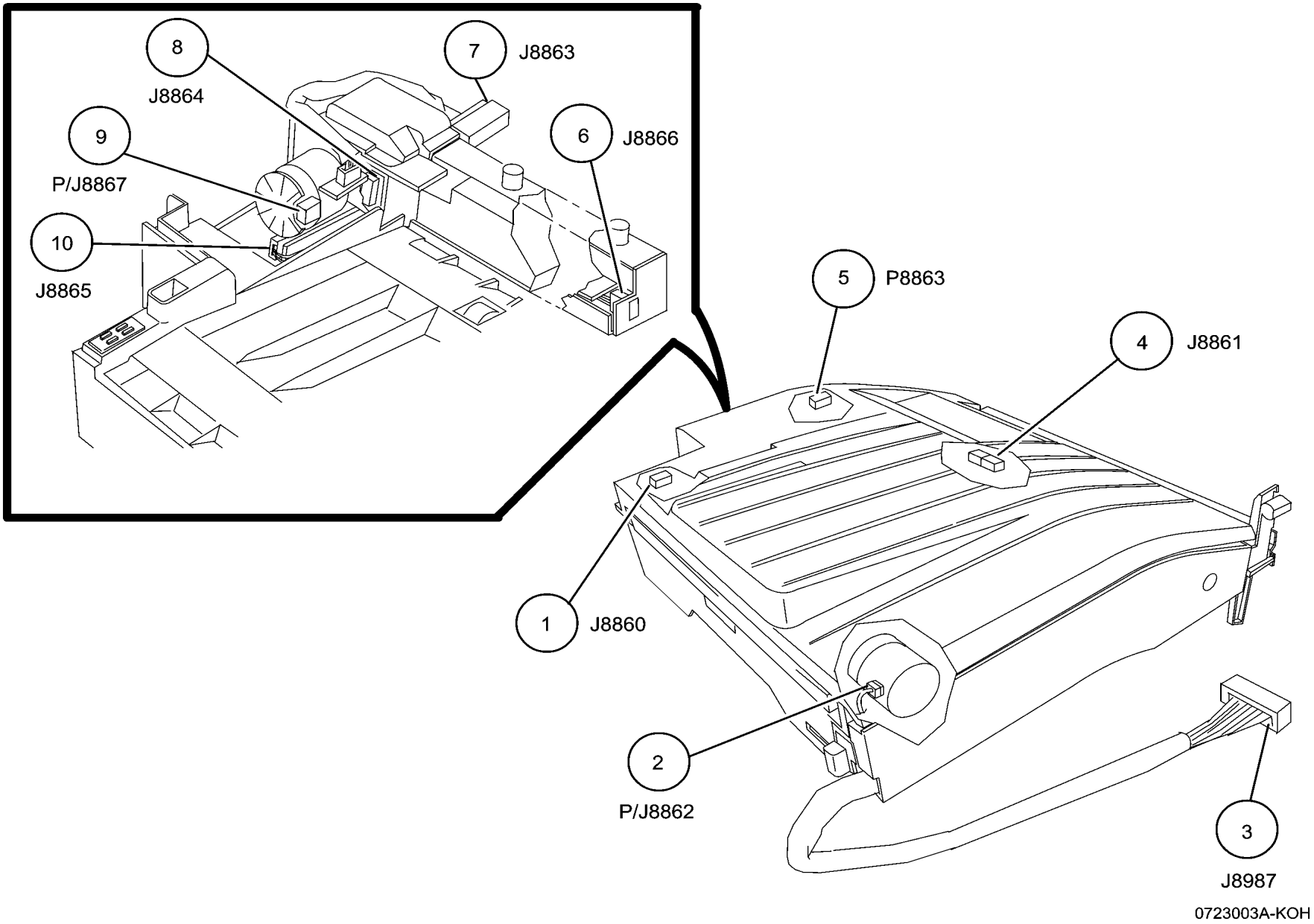

Figure 1 Finisher (LX) Horizontal Transport

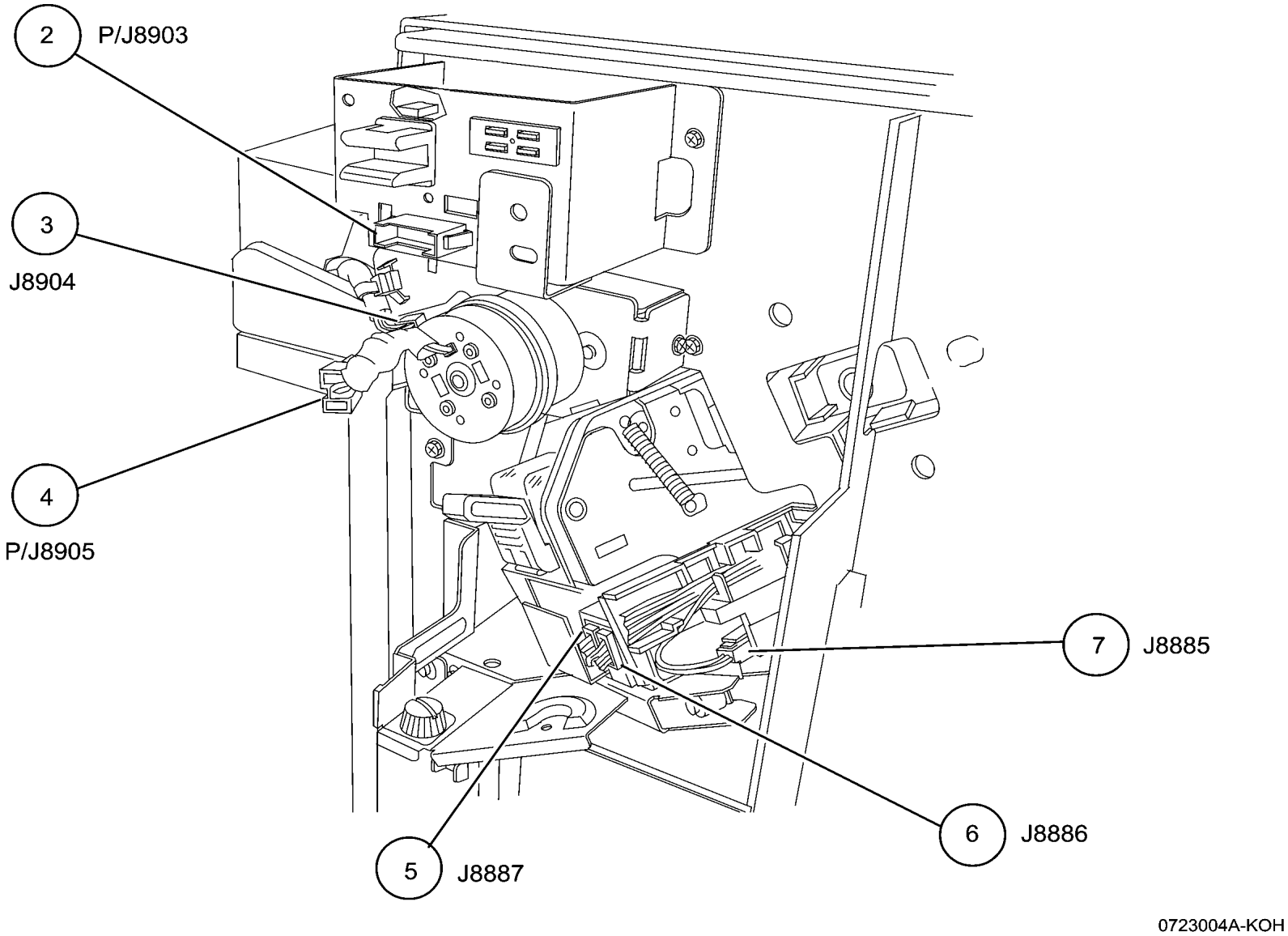

Figure 2 Finisher (LX) Front

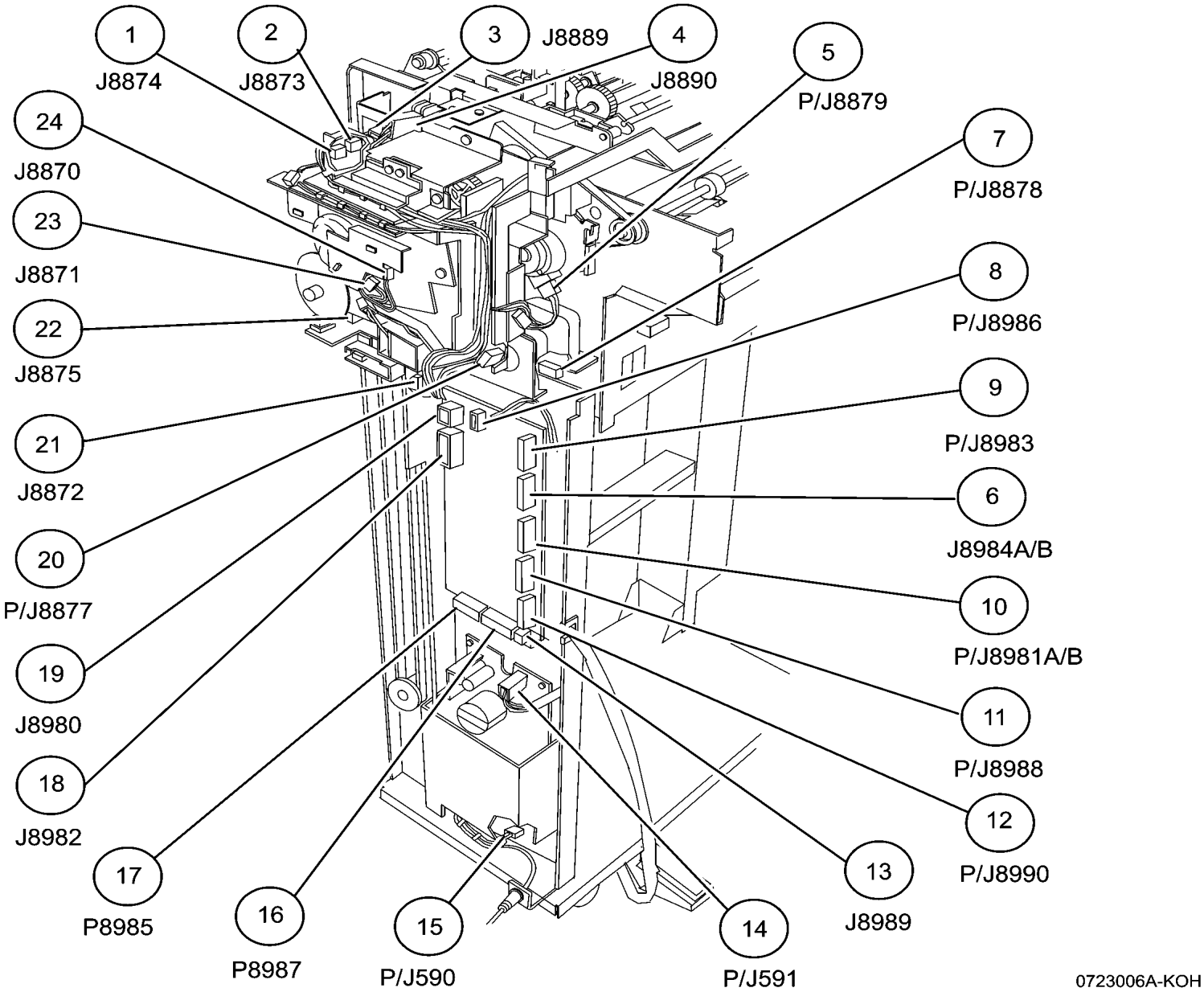

Figure 3 Finisher (LX) Rear

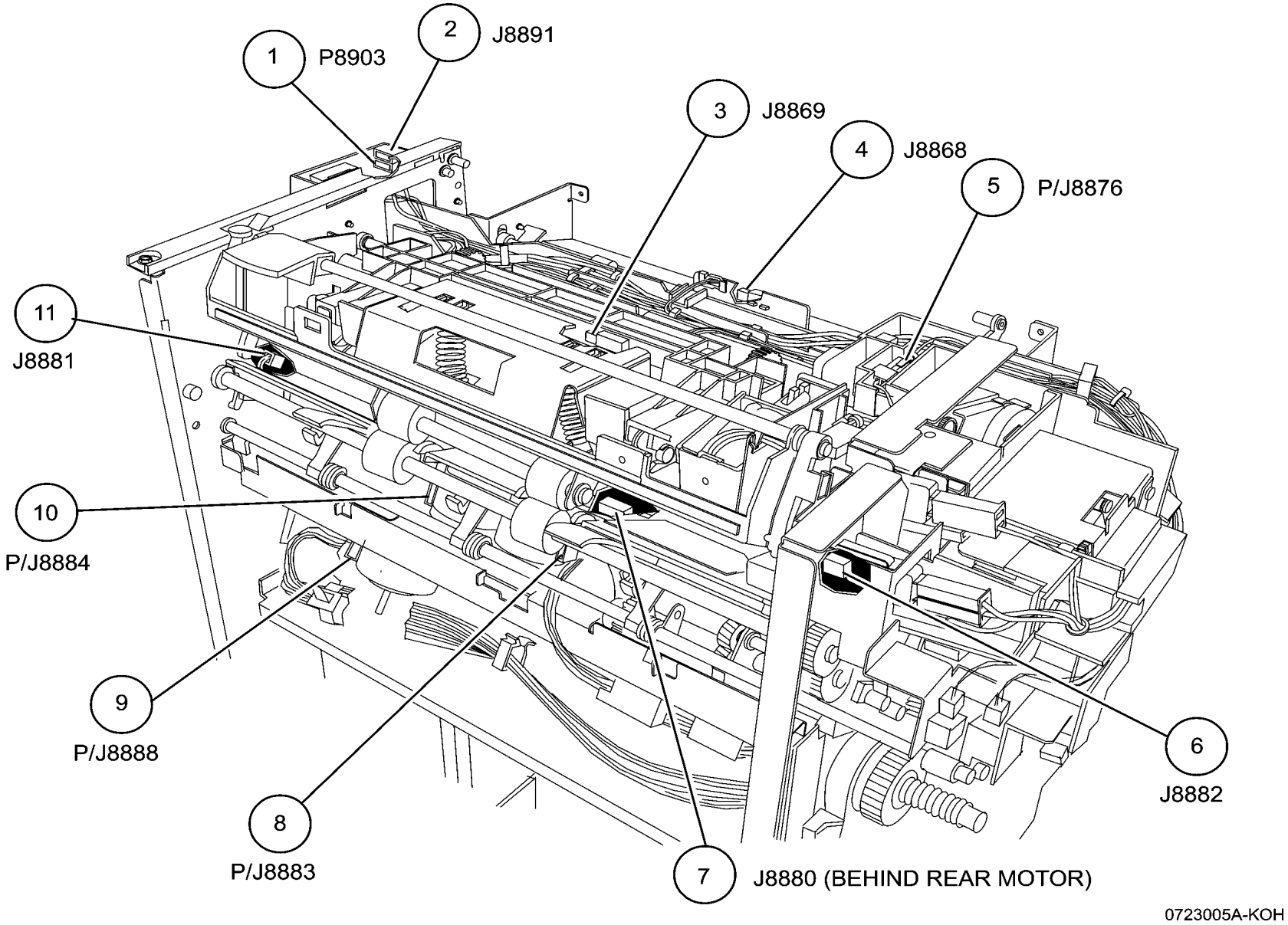

Figure 4 Finisher (LX) Eject

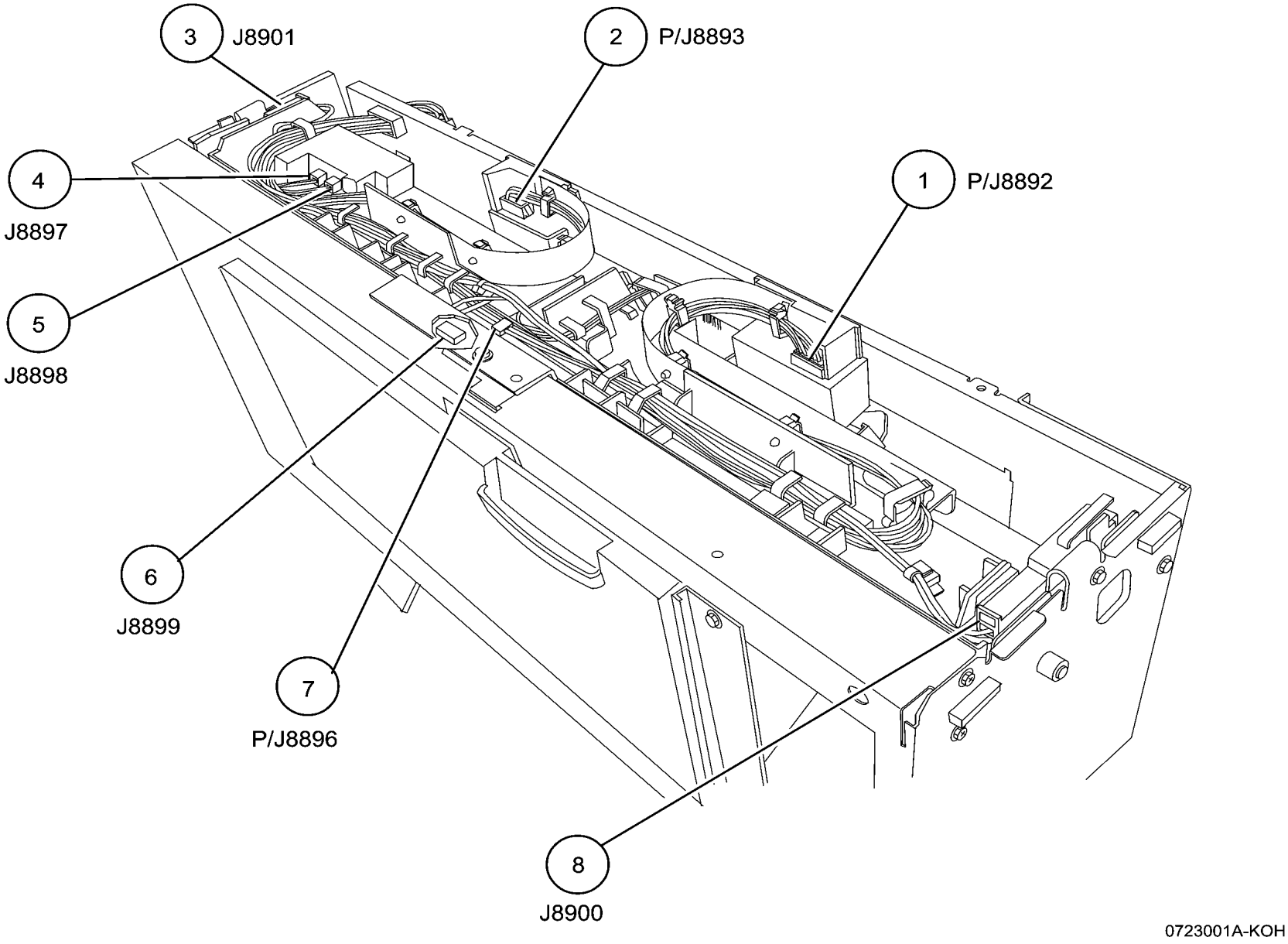

Figure 5 Booklet Maker Stapler Assembly

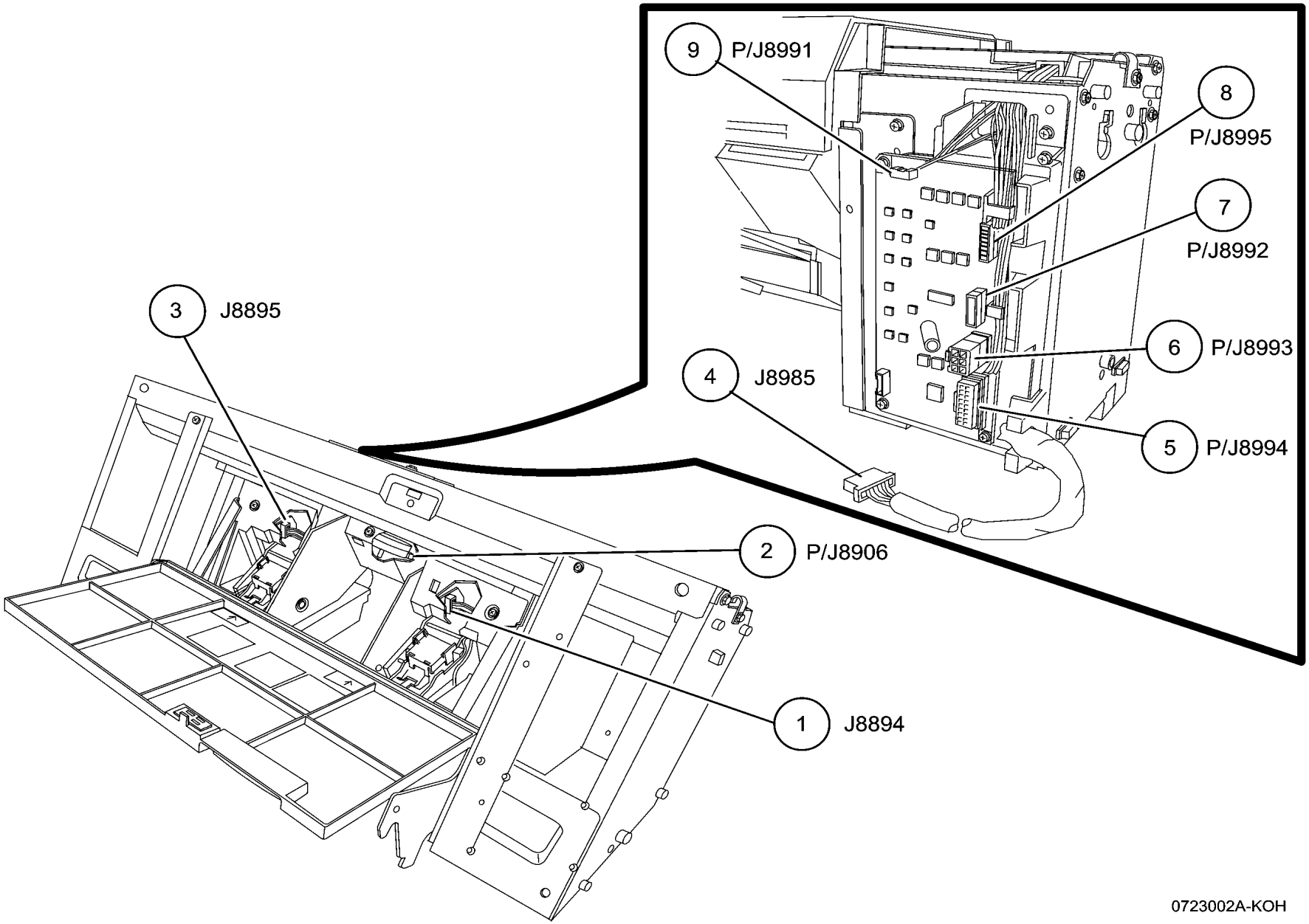

Figure 6 Booklet Maker PWB

ACH WIRENET

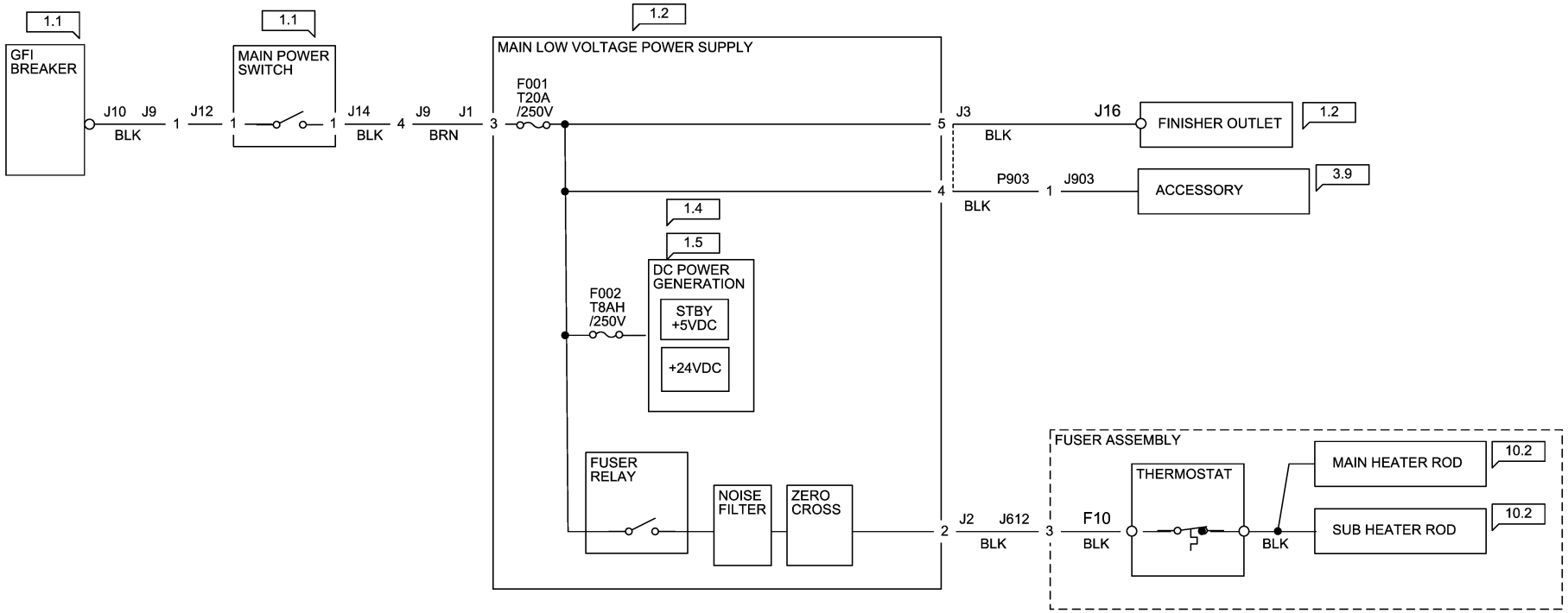

Figure 1 AC (Hot) Wirenet

ACN WIRENET

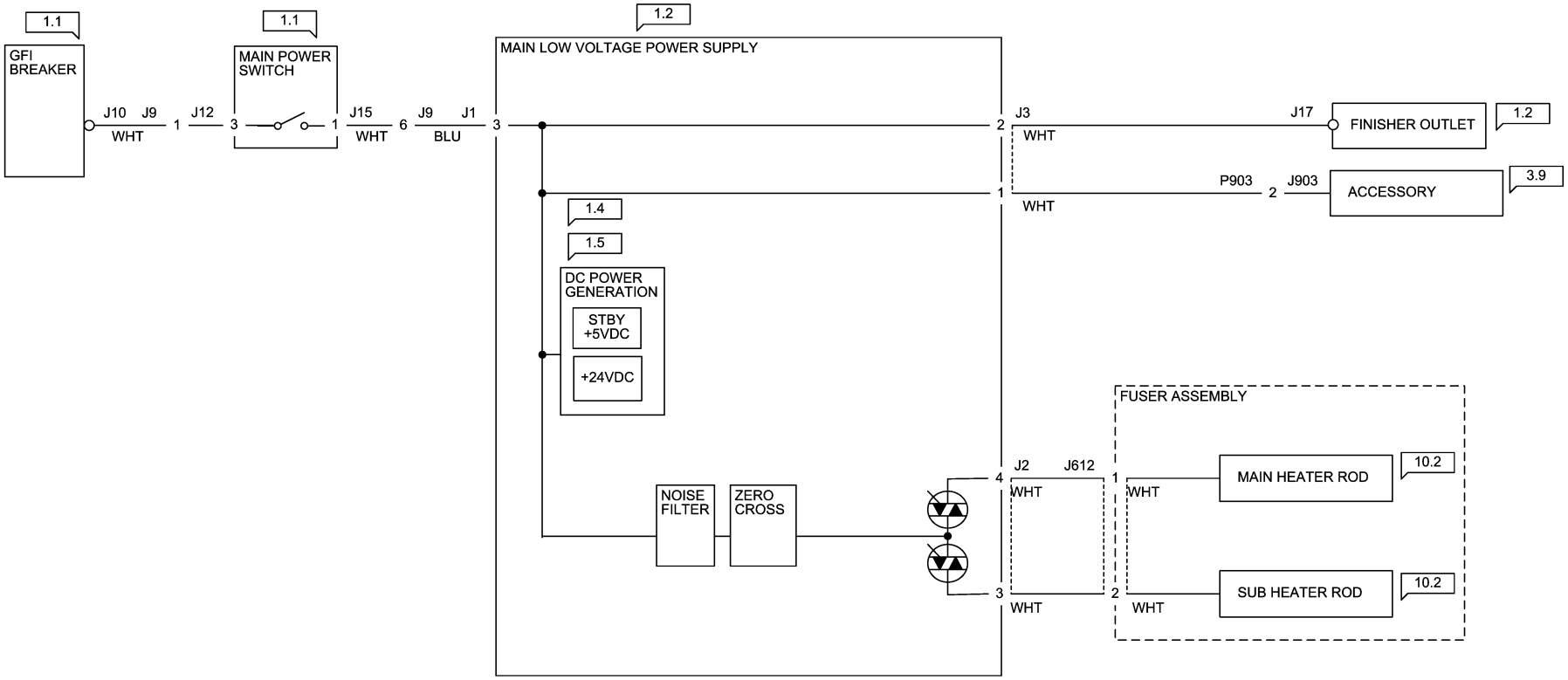

Figure 2 AC (Neutral) Wirenet

+2.5 VDC WIRENET

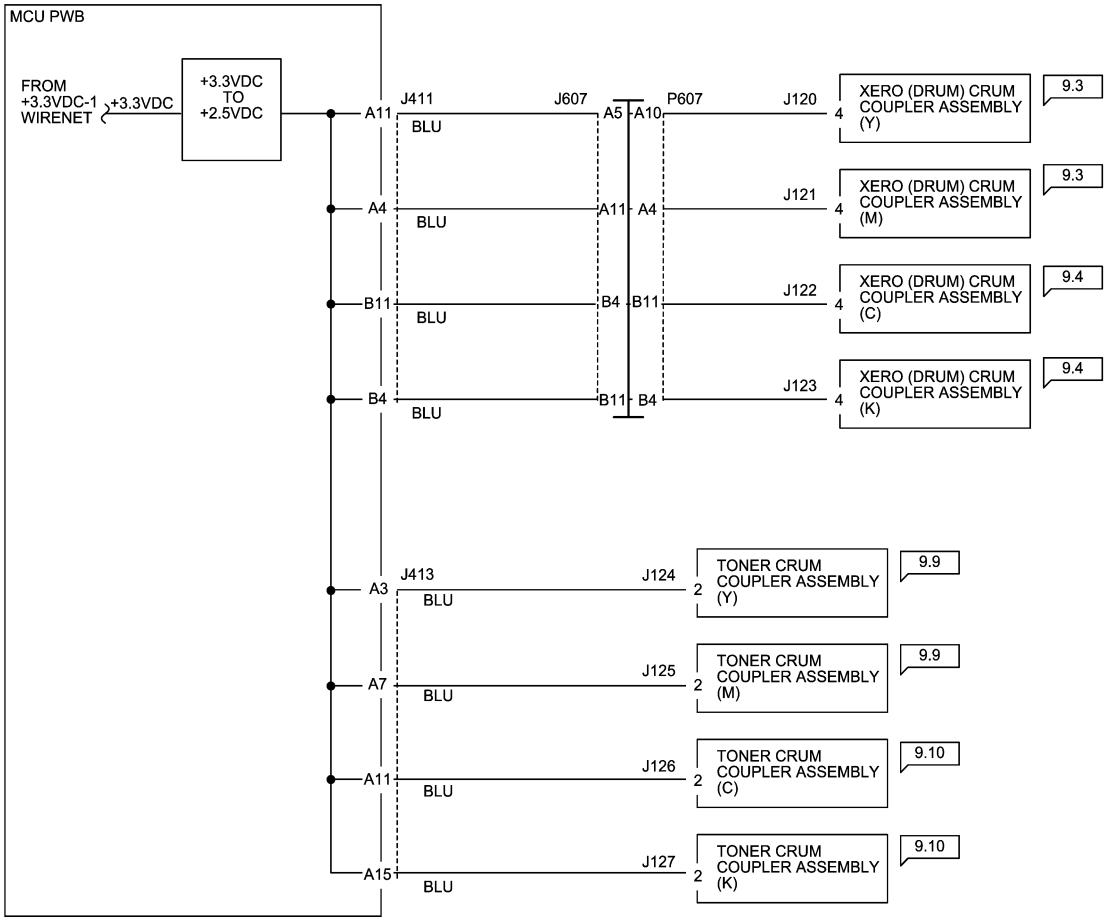

Figure 3 +2.5VDC Wirenet

2.5V RTN WIRENET

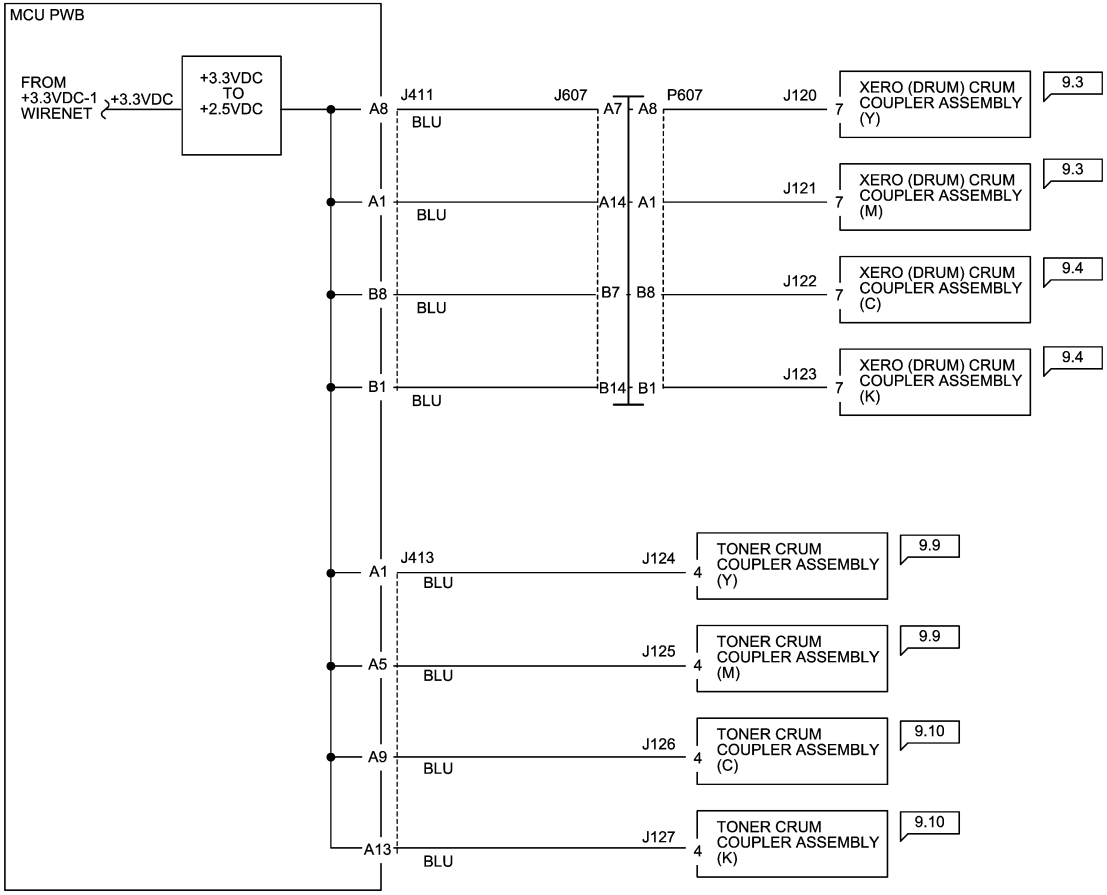

Figure 4 2.5V RTN Wirenet

+3.3VDC WIRENET

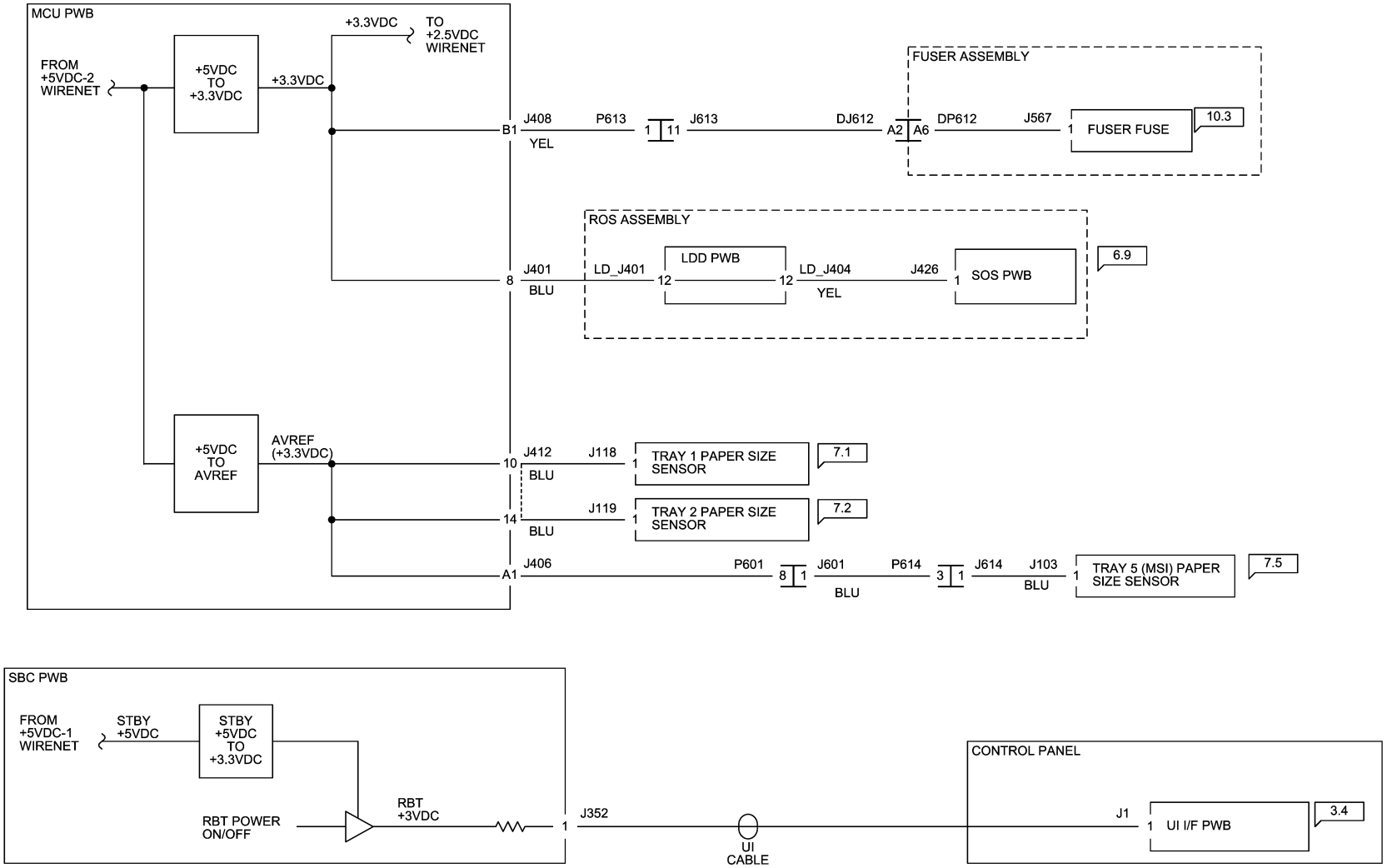

Figure 5 +3.3VDC Wirenet

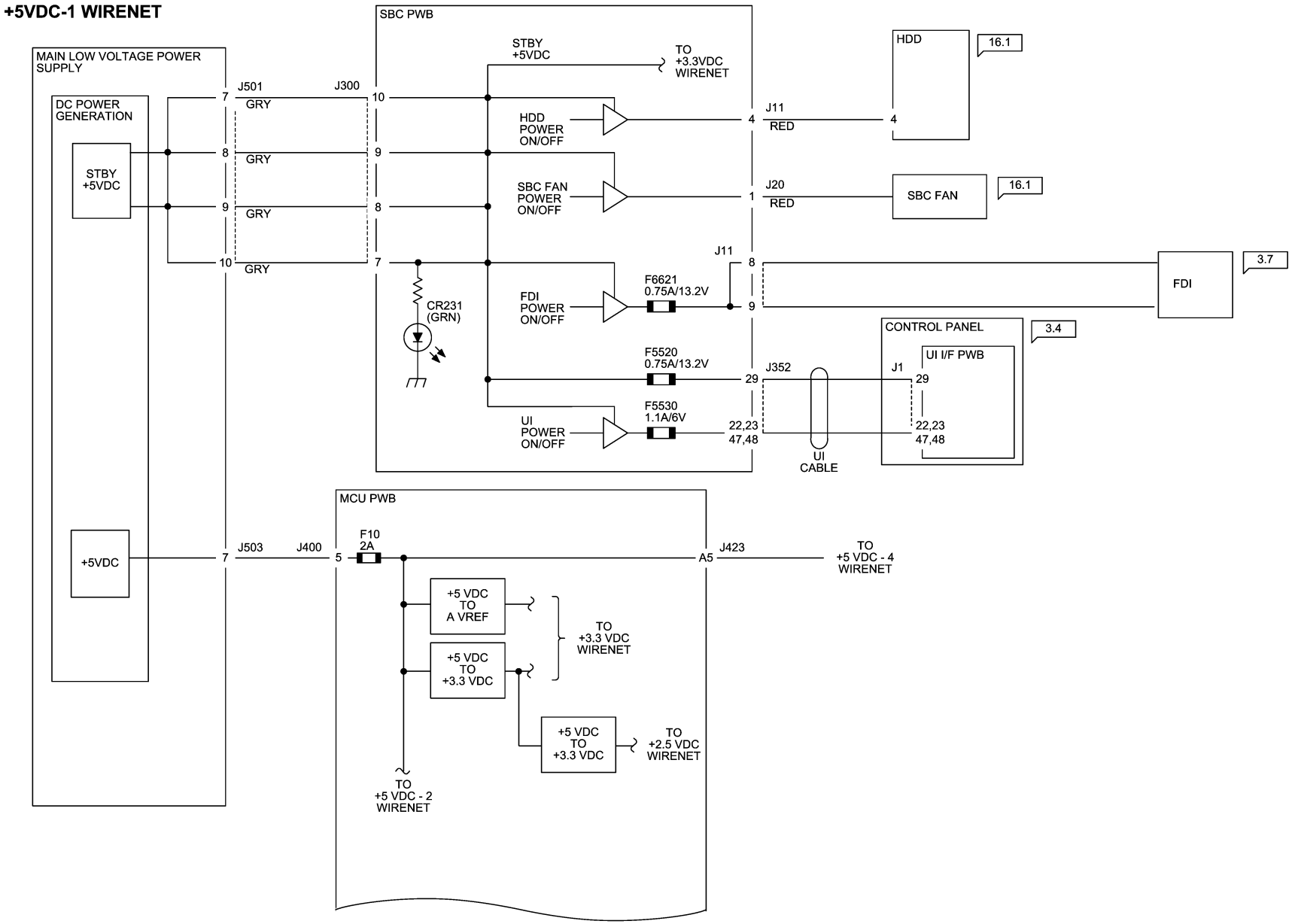

Figure 6 +5VDC Wirenet (1 of 4)

+5VDC-2 WIRENET

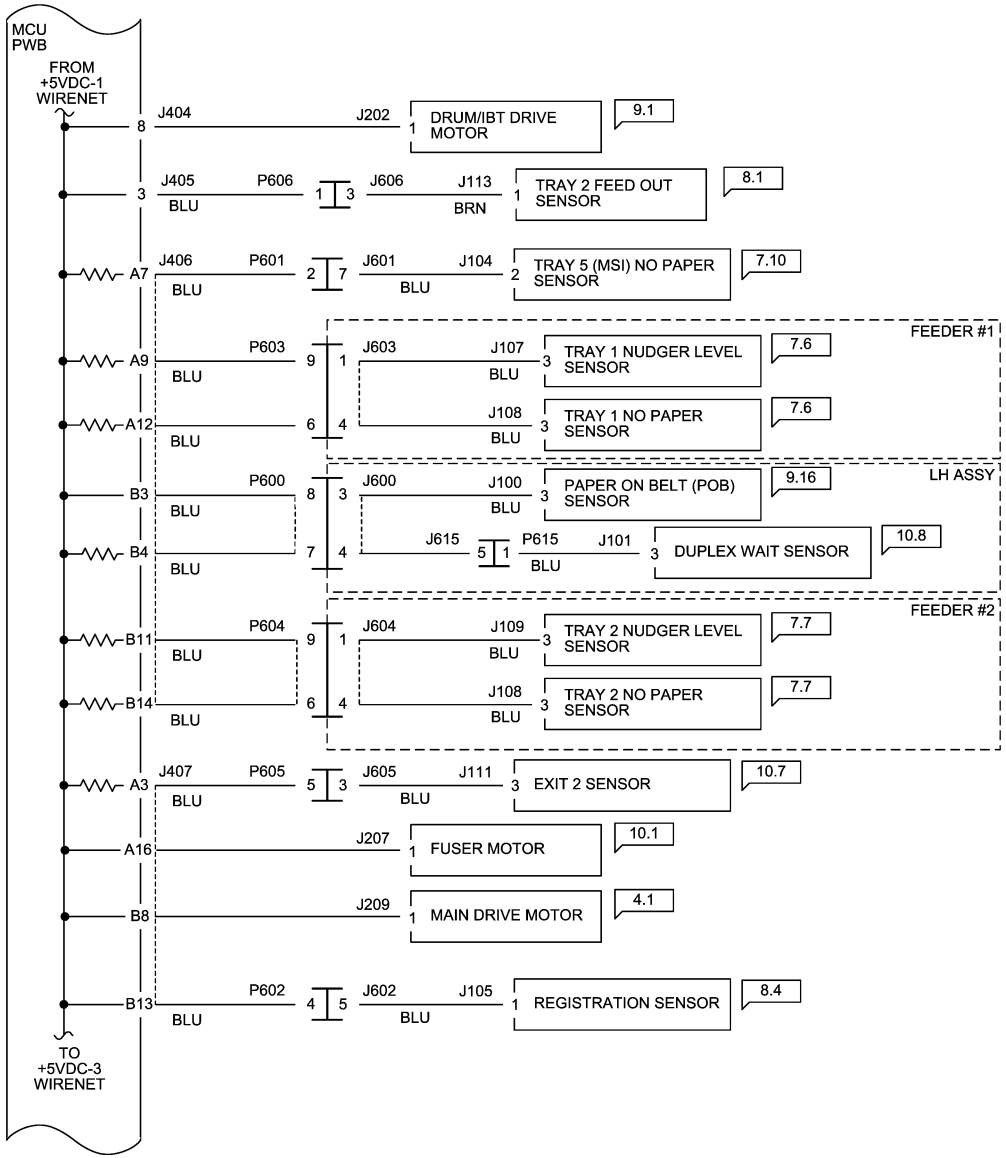

Figure 7 +5VDC Wirenet (2 of 4)

+5VDC-3 WIRENET

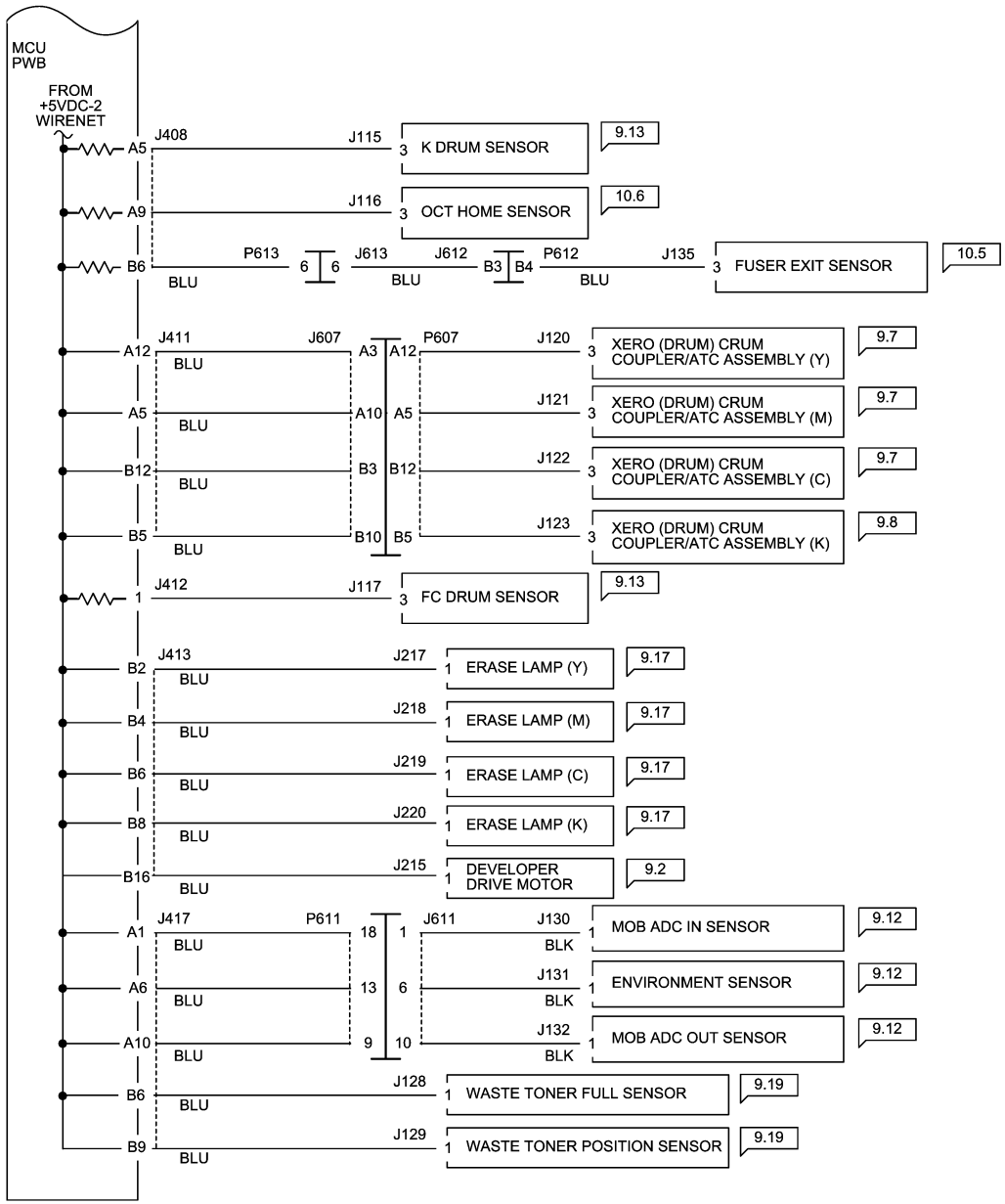

Figure 8 +5VDC Wirenet (3 of 4)

+5VDC-4 WIRENET

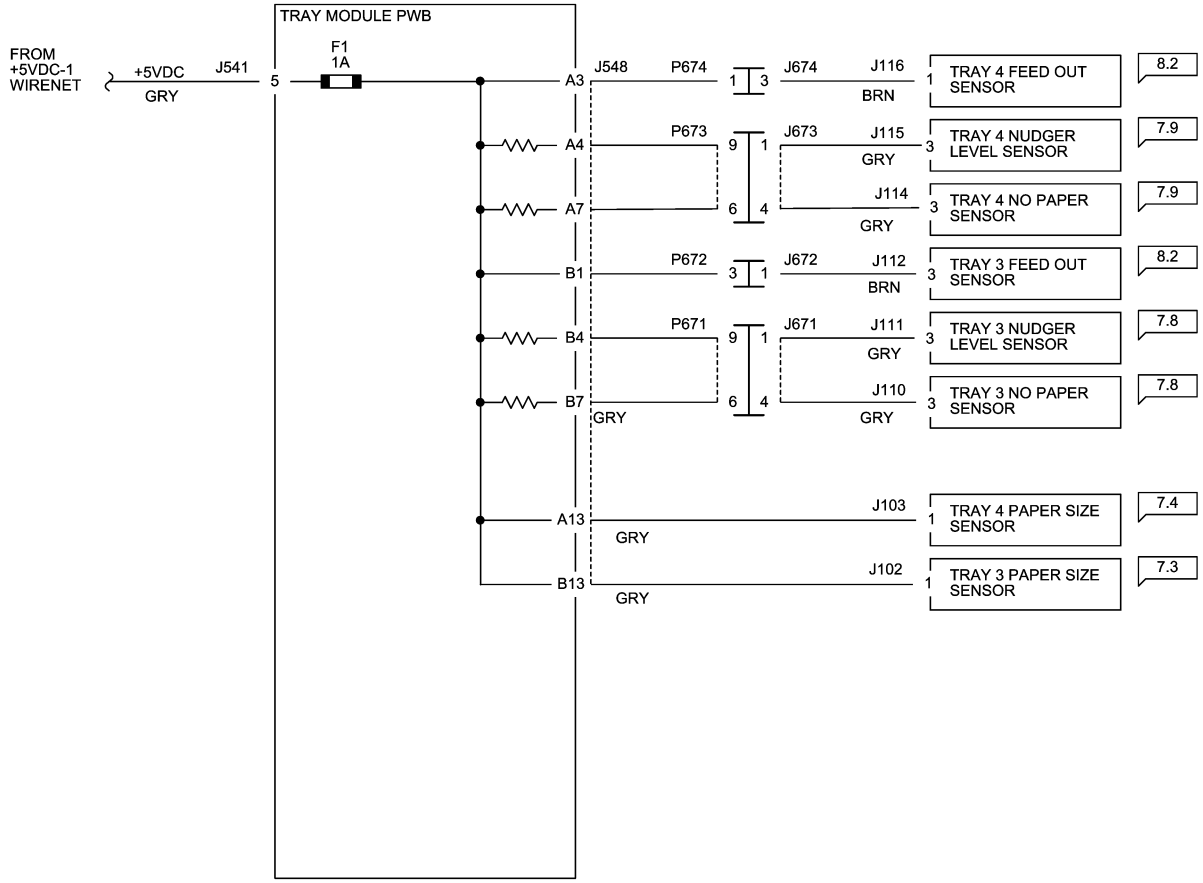

Figure 9 +5VDC Wirenet (4 of 4)

5VRTN-1 WIRENET

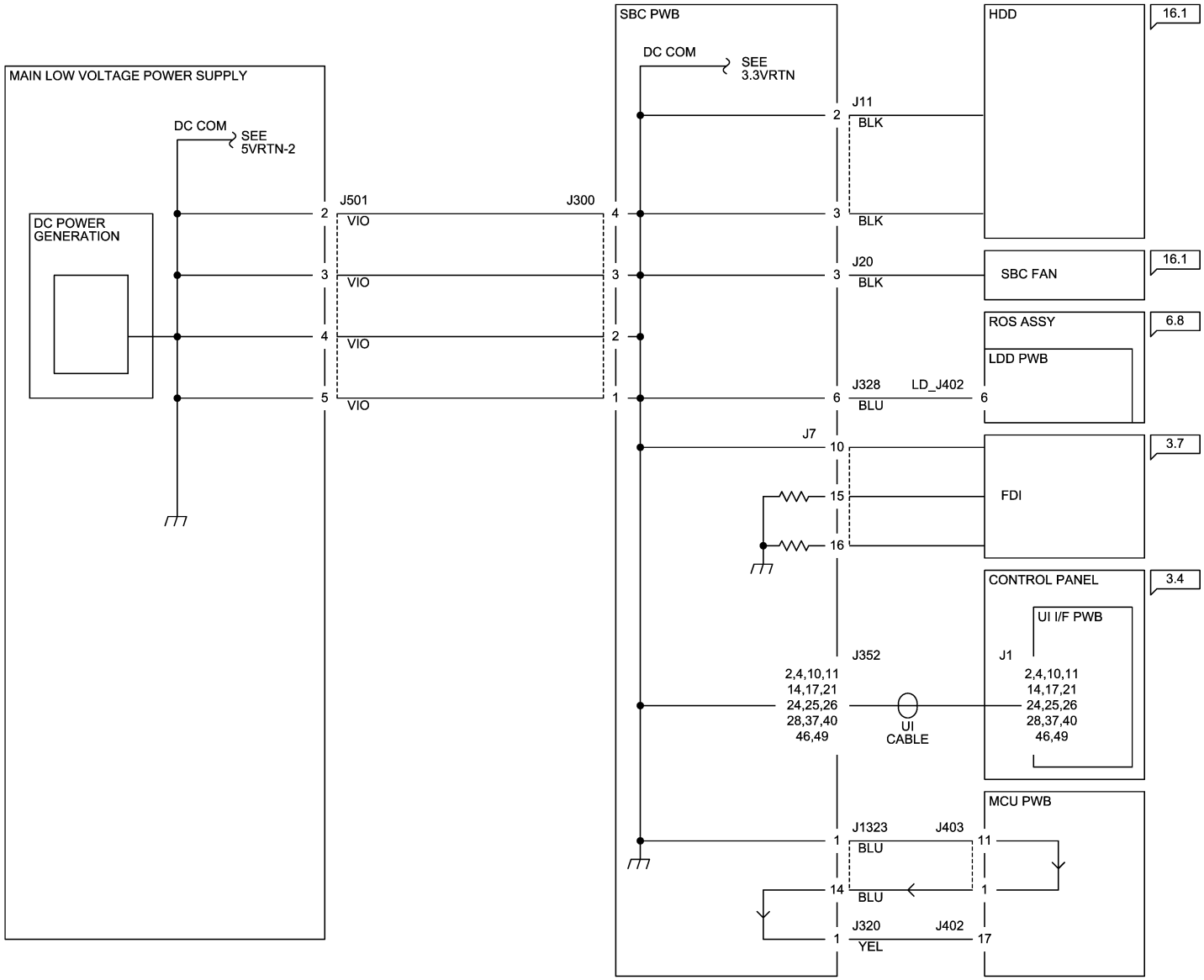

Figure 10 5V RTN Wirenet (1 of 4)

5VRTN-2 WIRENET

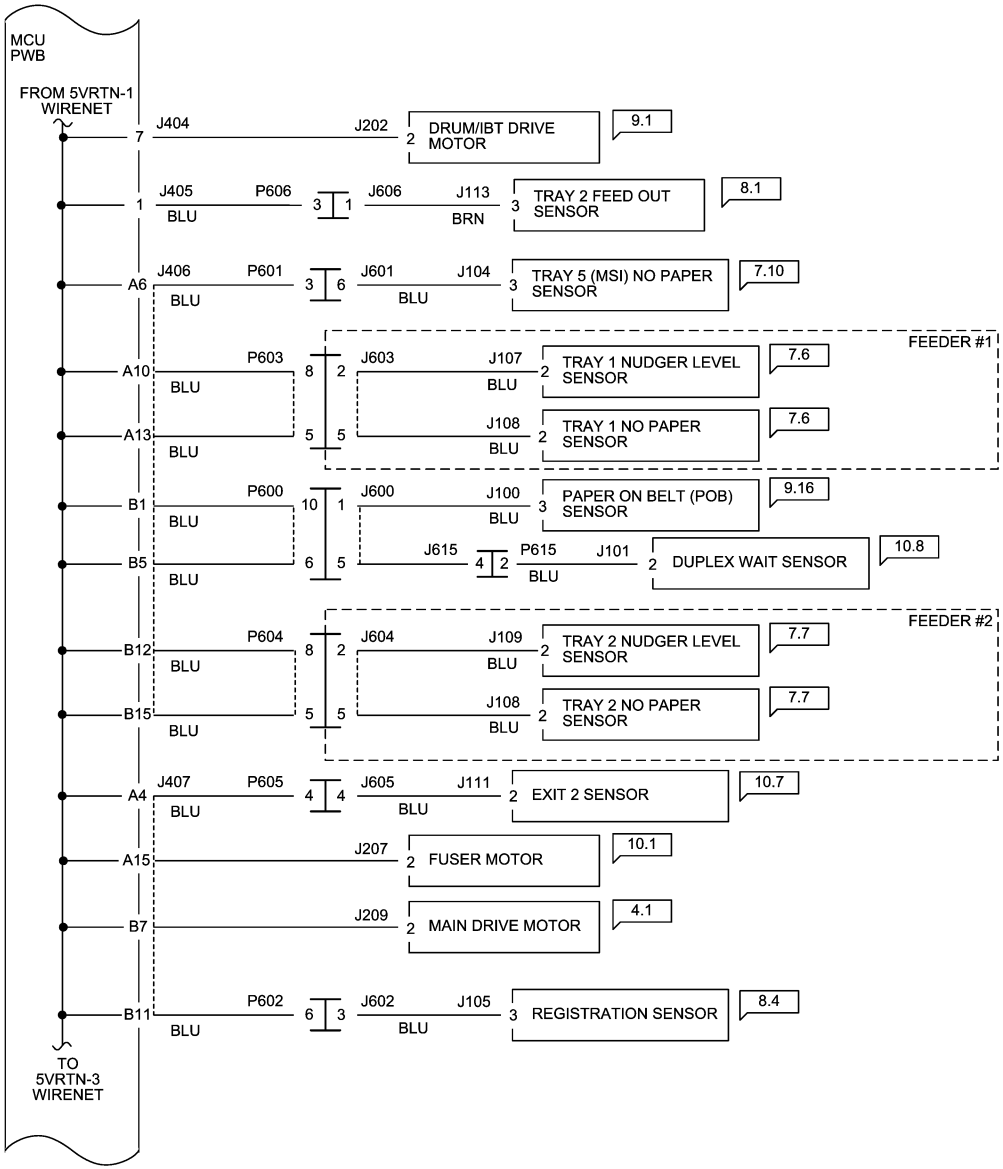

Figure 11 5V RTN Wirenet (2 of 4)

5VRTN-3 WIRENET

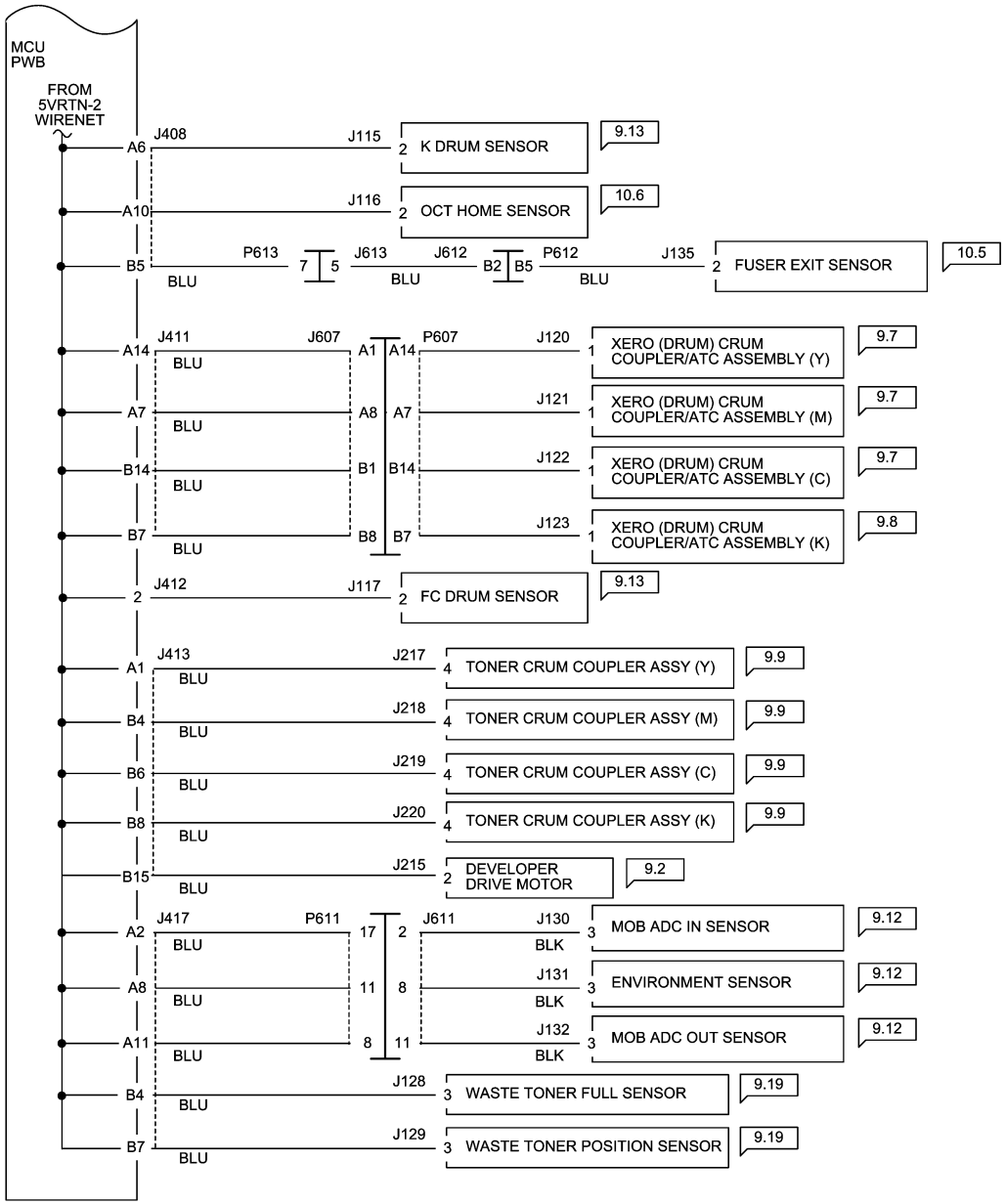

Figure 12 5V RTN Wirenet (3 of 4)

5VRTN-4 WIRENET

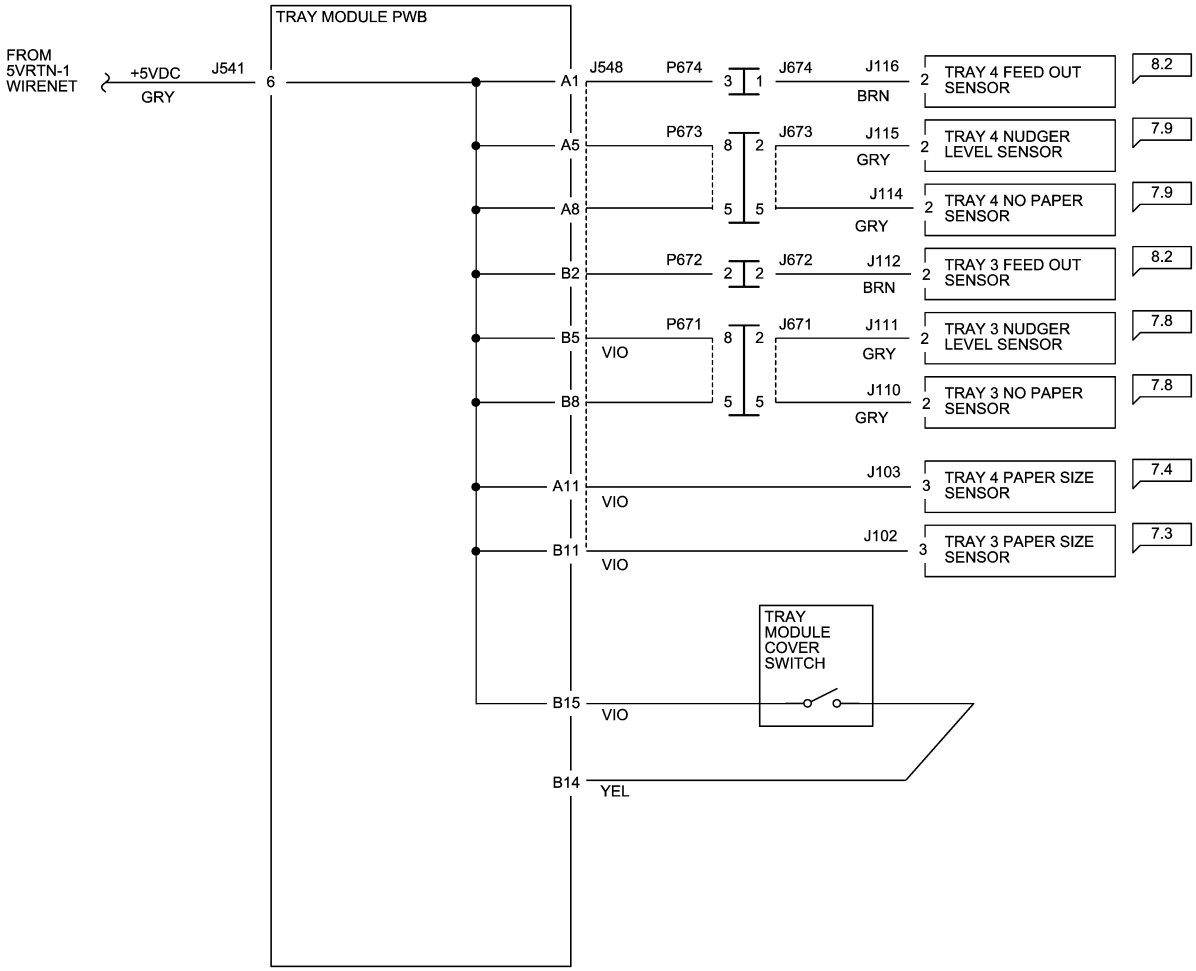

Figure 13 5V RTN Wirenet (4 of 4)

+24VDC-1 WIRENET

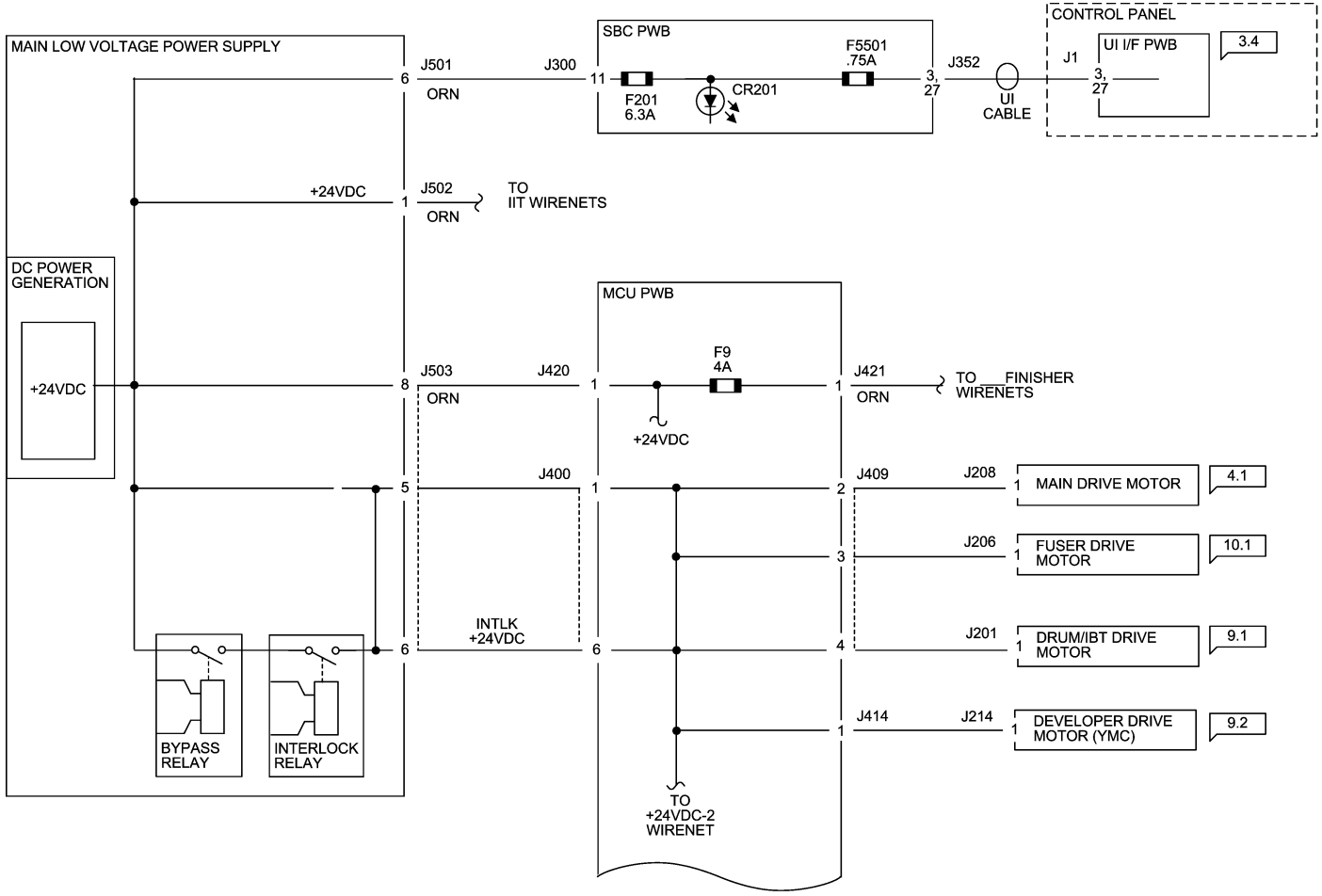

Figure 14 +24VDC Wirenet (1 of 2)

+24VDC-2 WIRENET

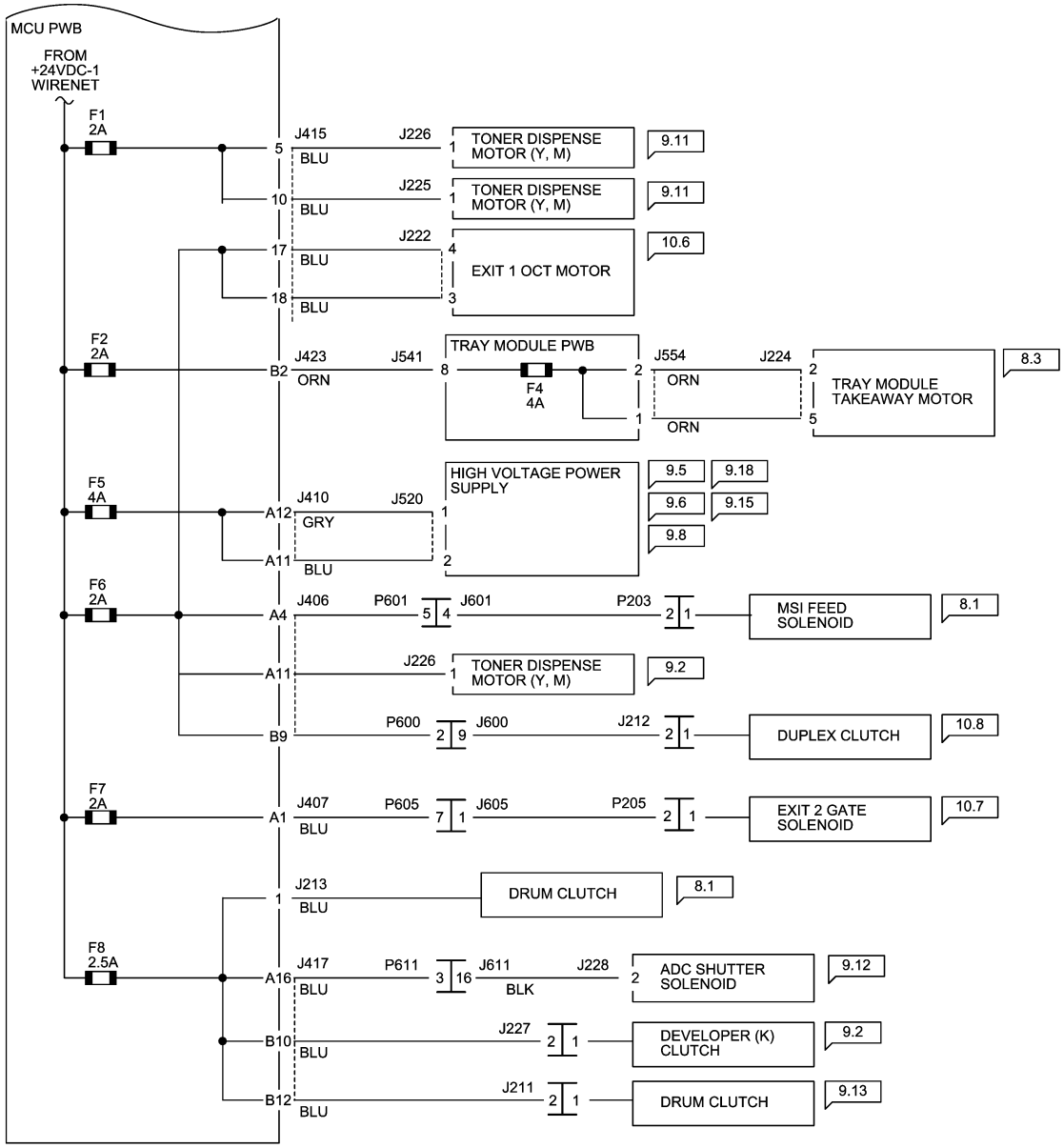

Figure 15 +24VDC Wirenet (2 of 2)

24VRTN-1 WIRENET

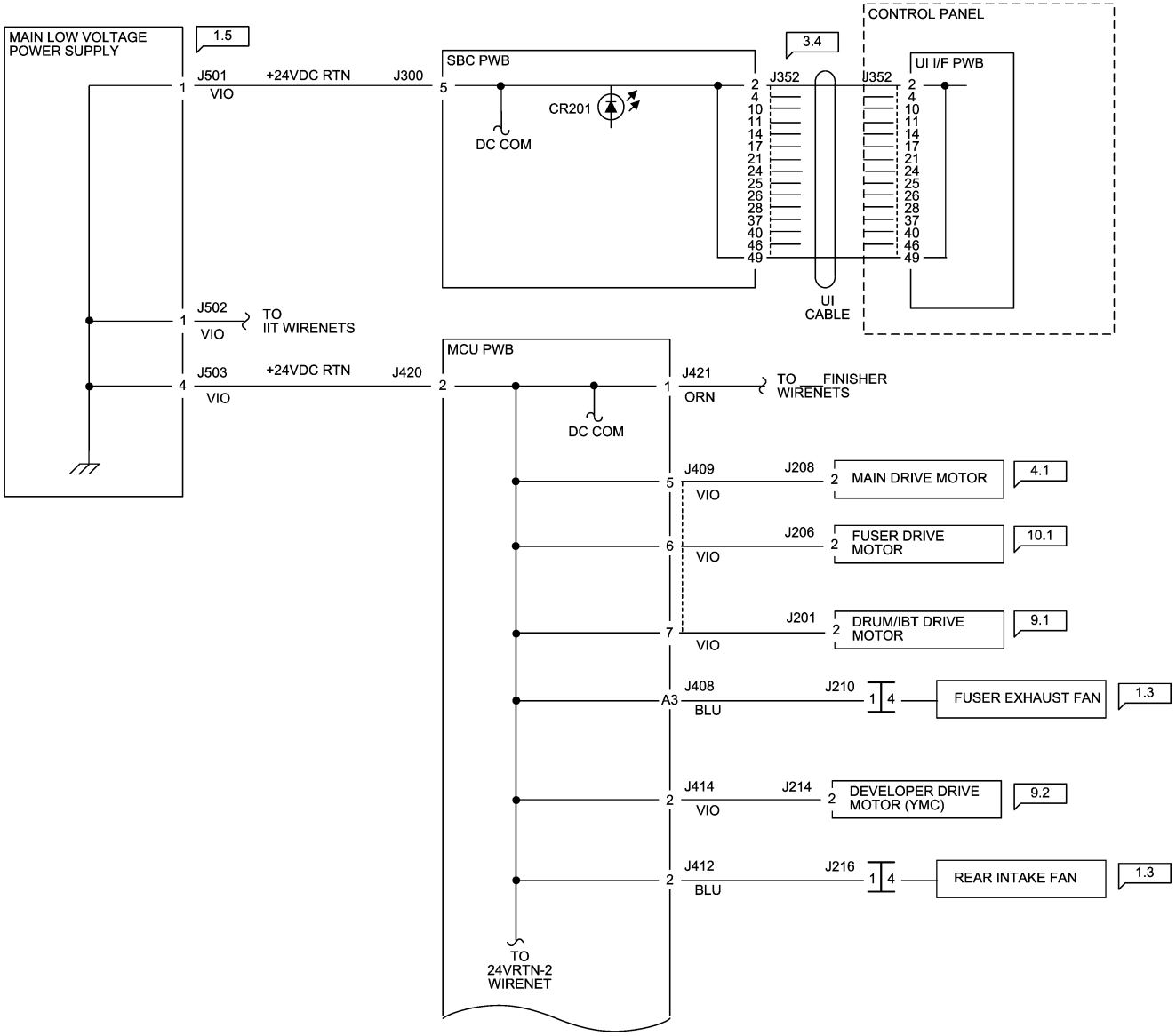

Figure 16 24V RTN Wirenet (1 of 3)

24VRTN-2 WIRENET

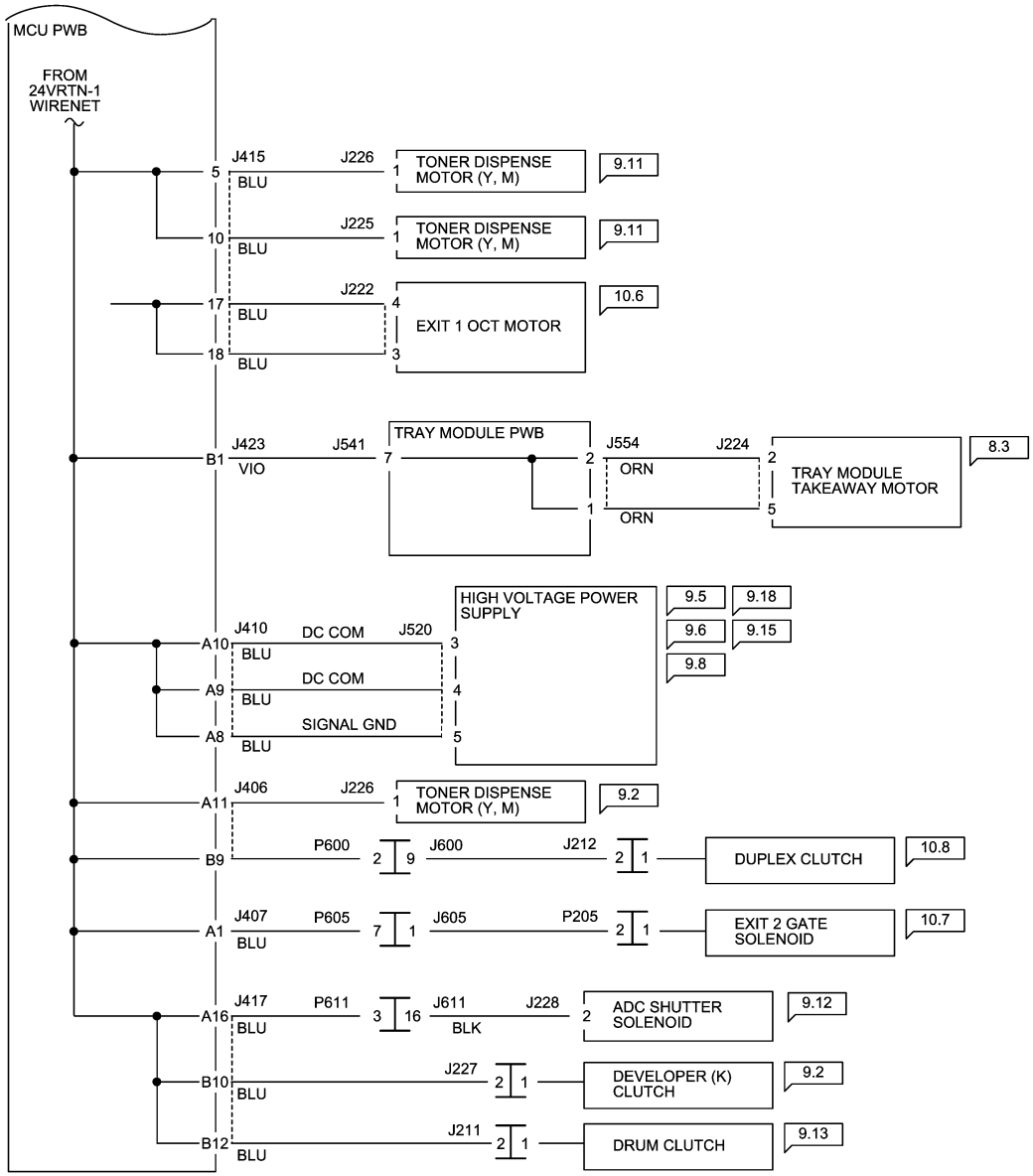

Figure 17 24V RTN Wirenet (2 of 3)

24VRTN-3 WIRENET

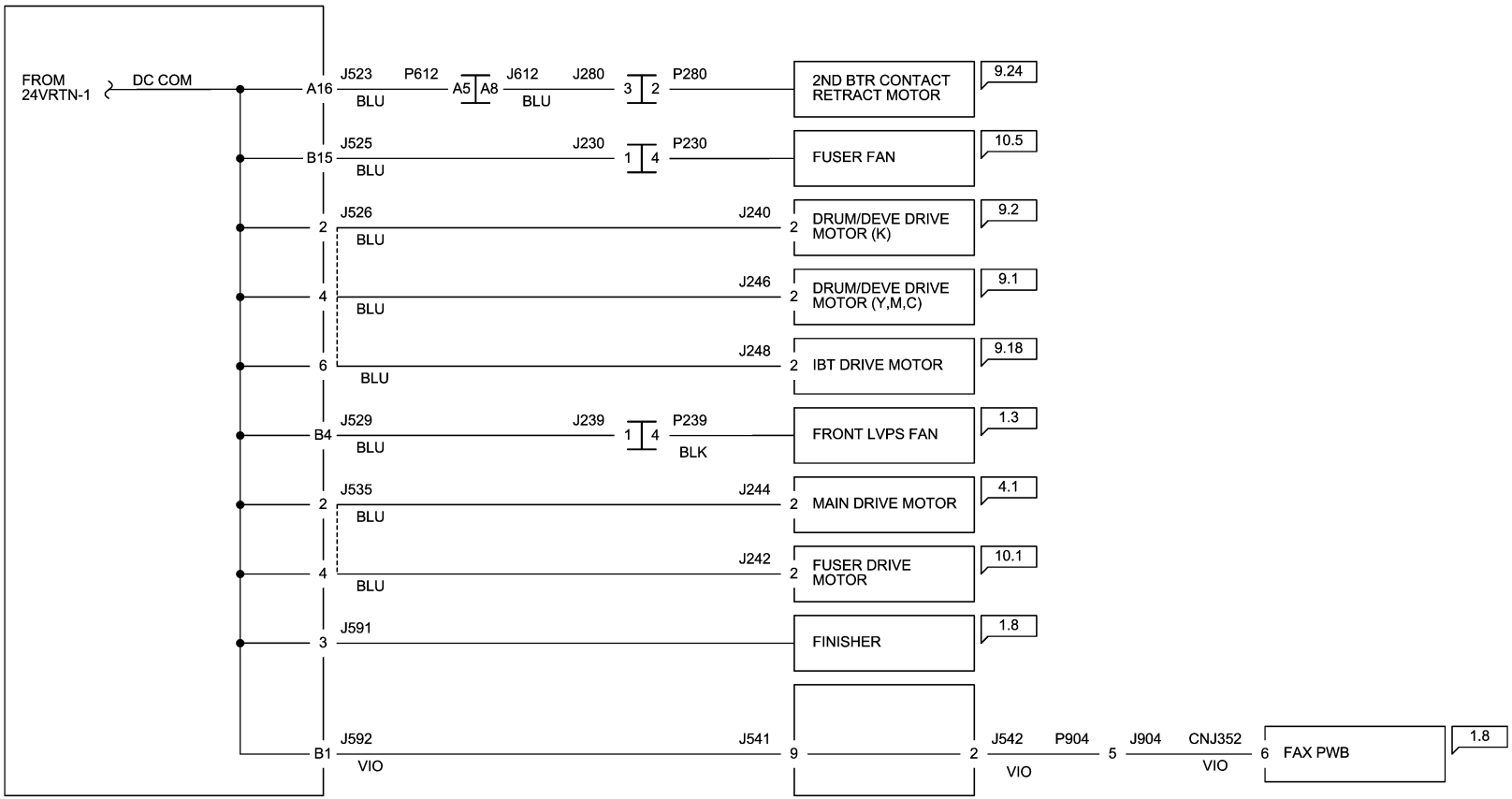

Figure 18 24V RTN Wirenet (3 of 3)

IIT +3.3/+5/+24VDC WIRENET

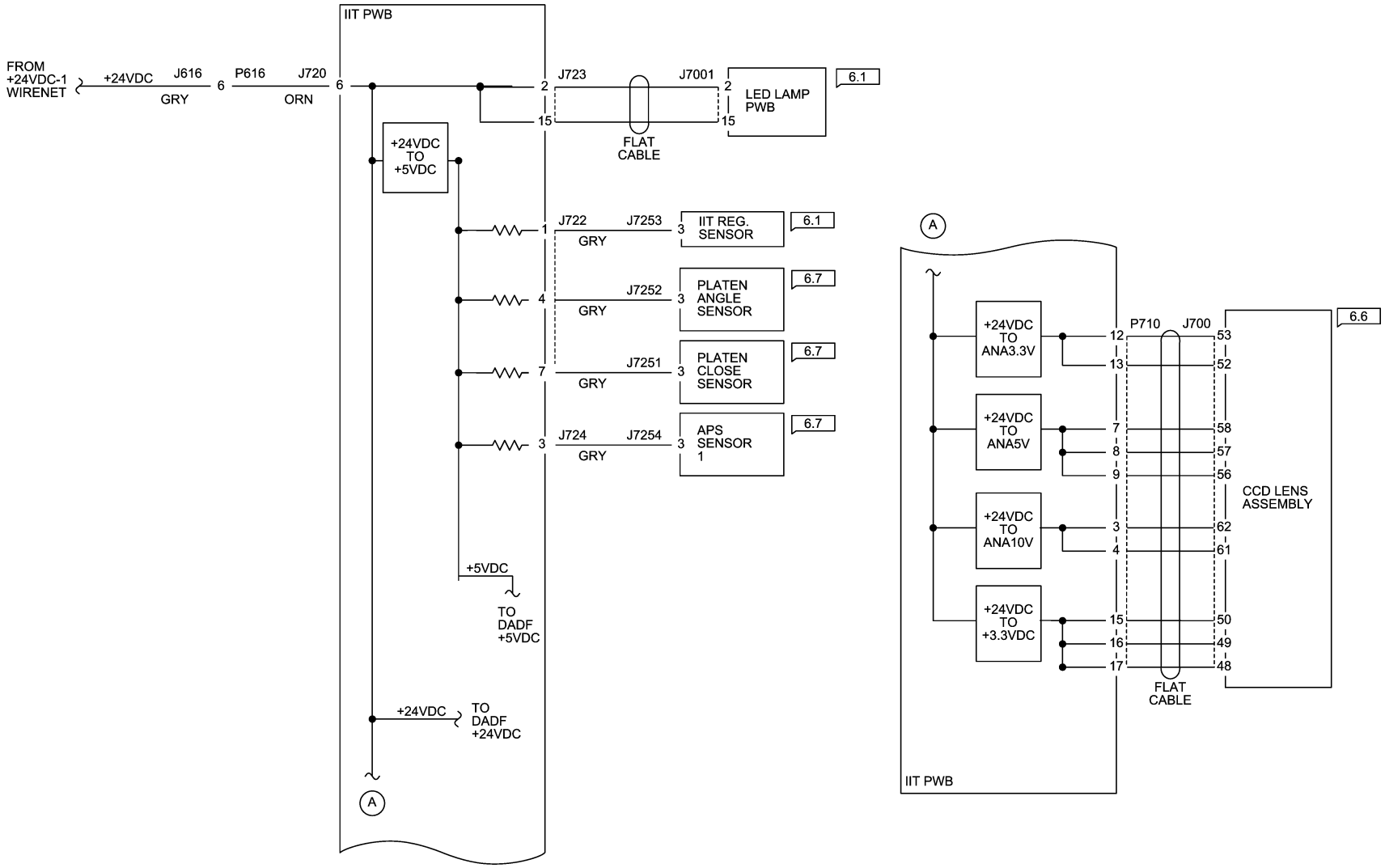

Figure 1 IIT +3.3/+5/+24VDC Wirenets

IIT 3.3/5/24V RTN WIRENET

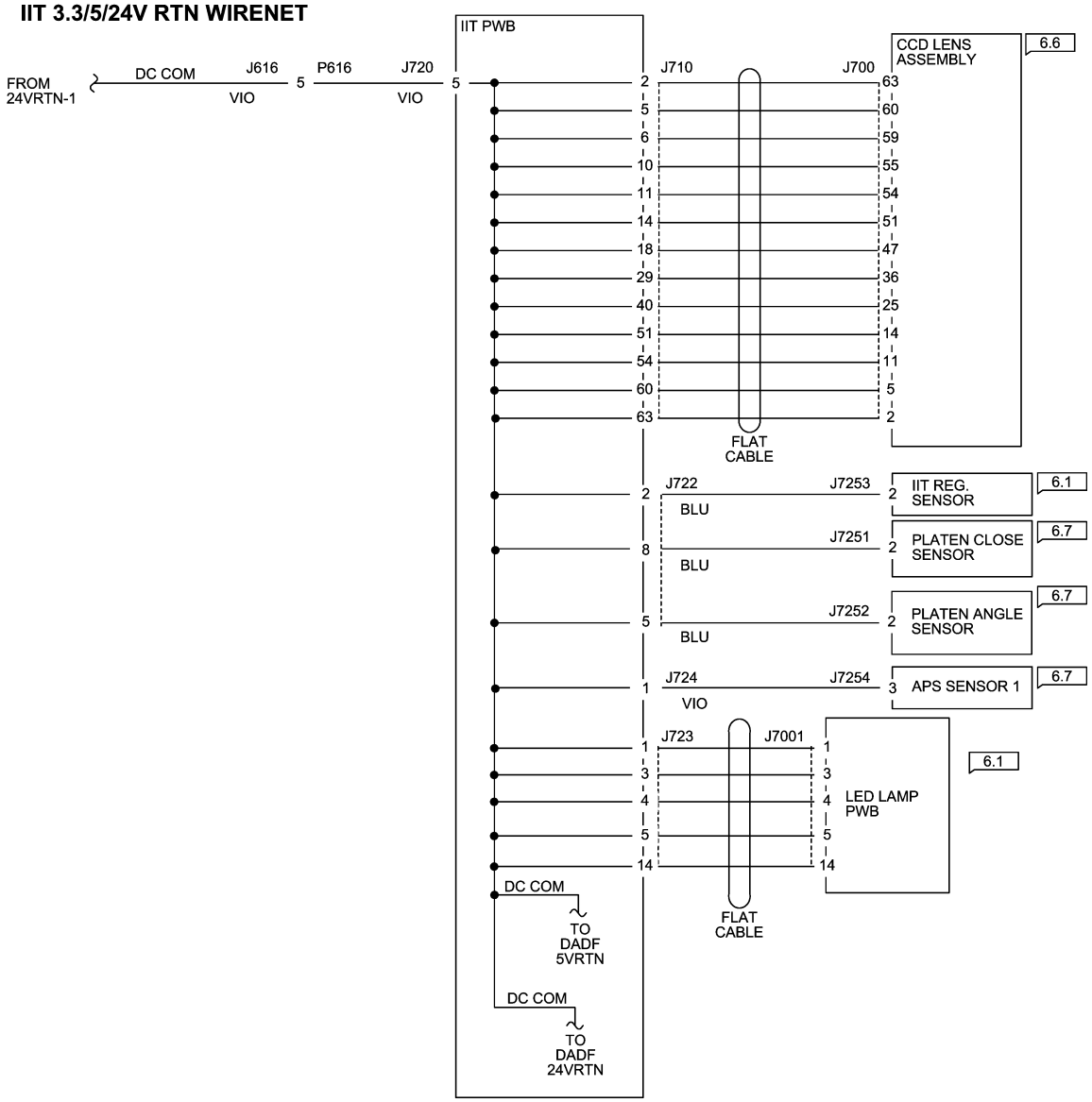

Figure 2 IIT 3.3/5/24V RTN Wirenet

DADF +5VDC WIRENET

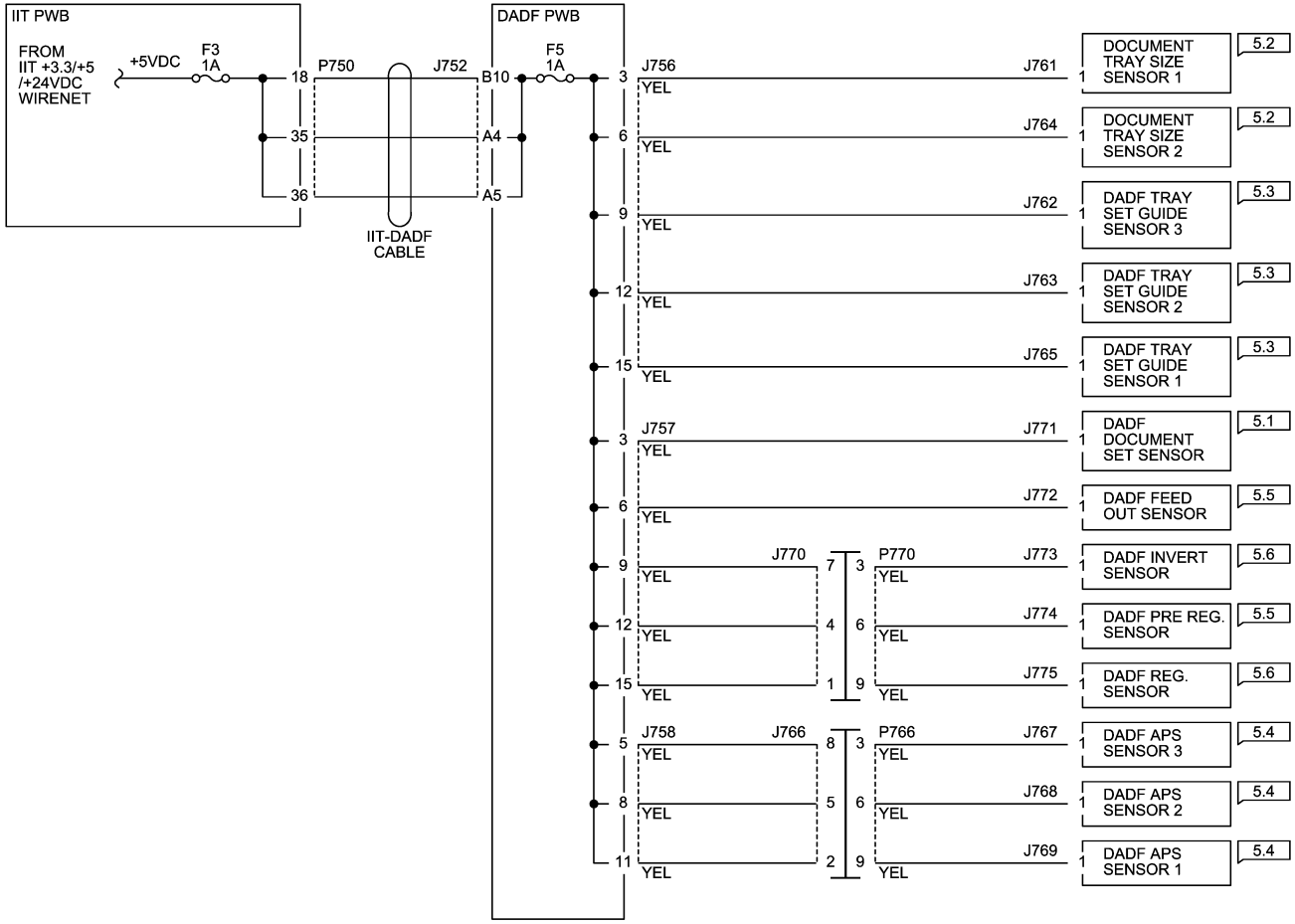

Figure 3 DADF +5VDC Wirenet

DADF 5VRTN WIRENET

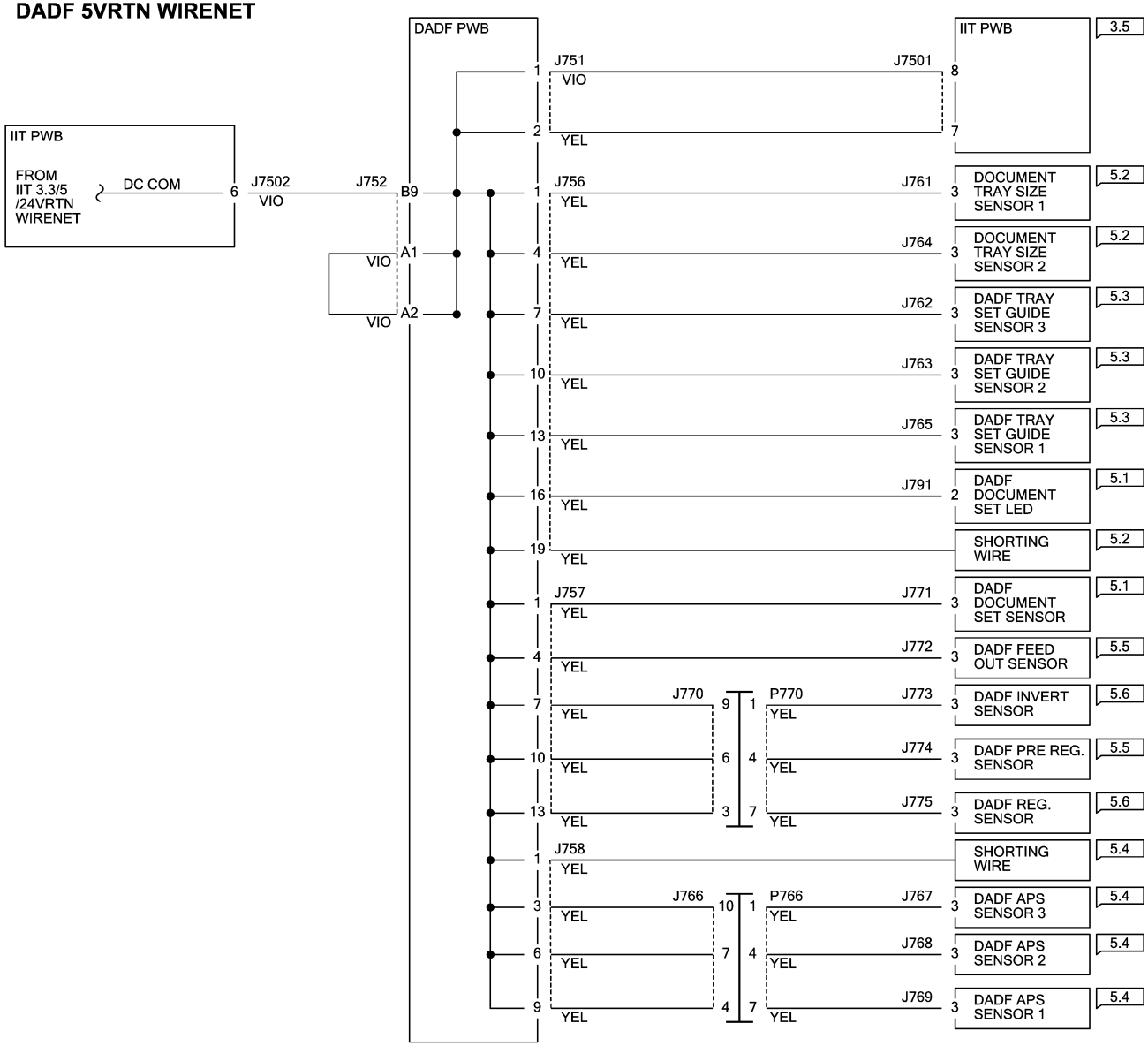

Figure 4 DADF 5V RTN Wirenet

DADF +24VDC WIRENET

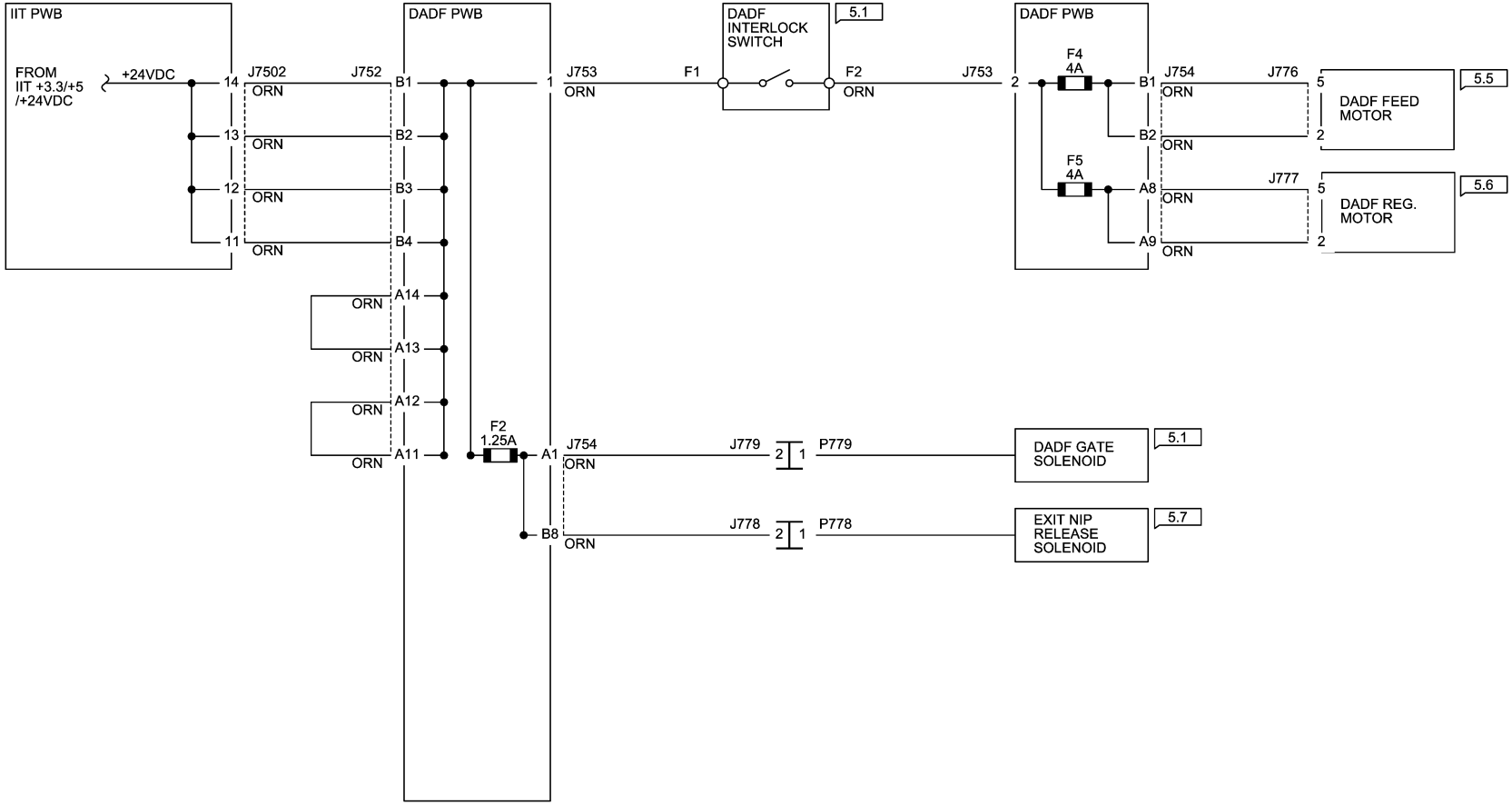

Figure 5 DADF +24VDC Wirenet

DADF 24VRTN

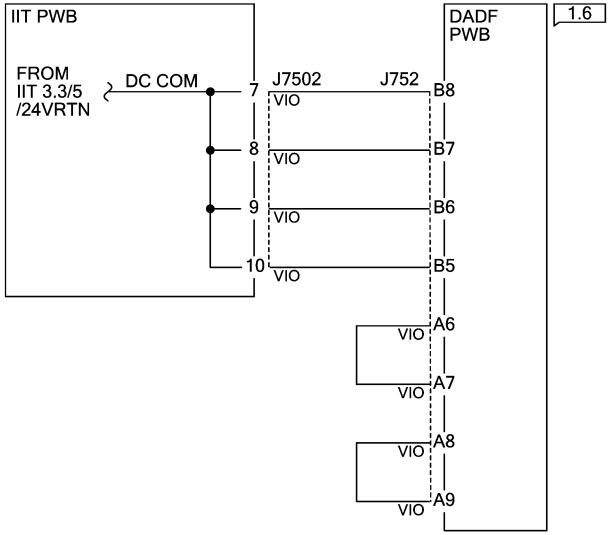

Figure 6 DADF +24VDC Wirenet

INTEGRATED OFFICE FINISHER +5VDC WIRENET

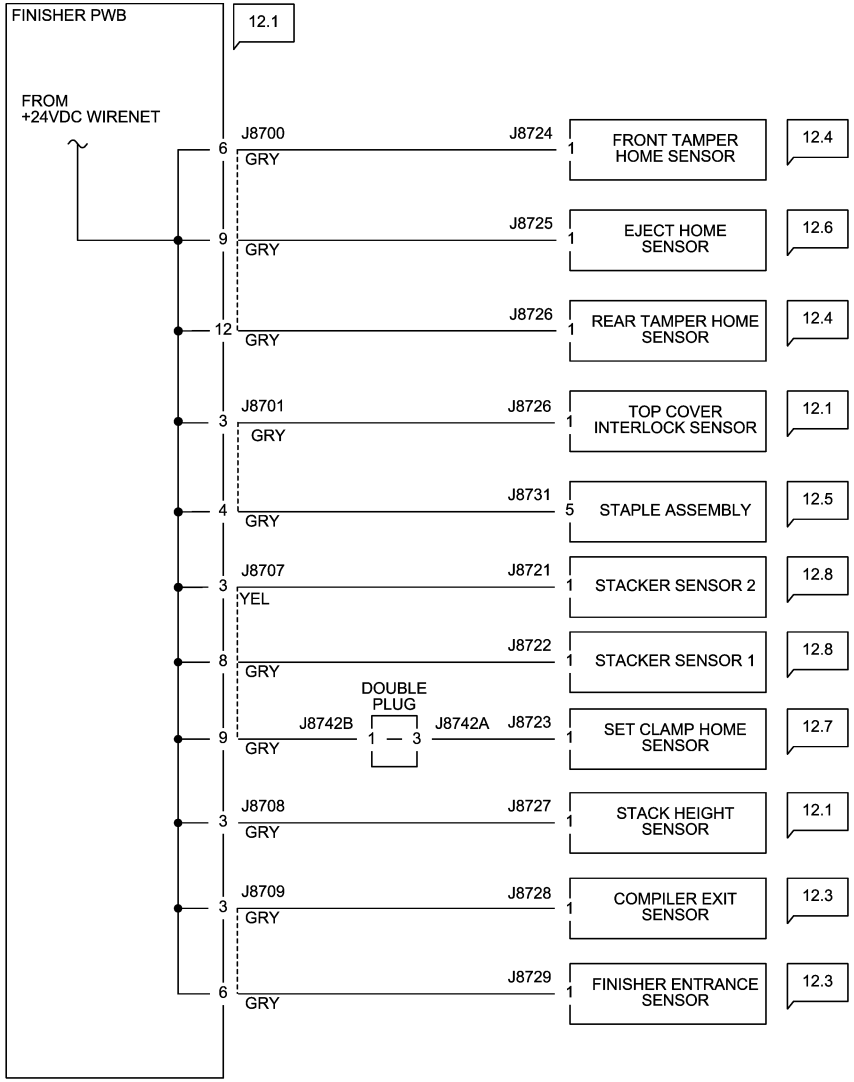

Figure 1 Integrated Finisher +5VDC Wirenet

INTEGRATED OFFICE FINISHER +24VDC WIRENET

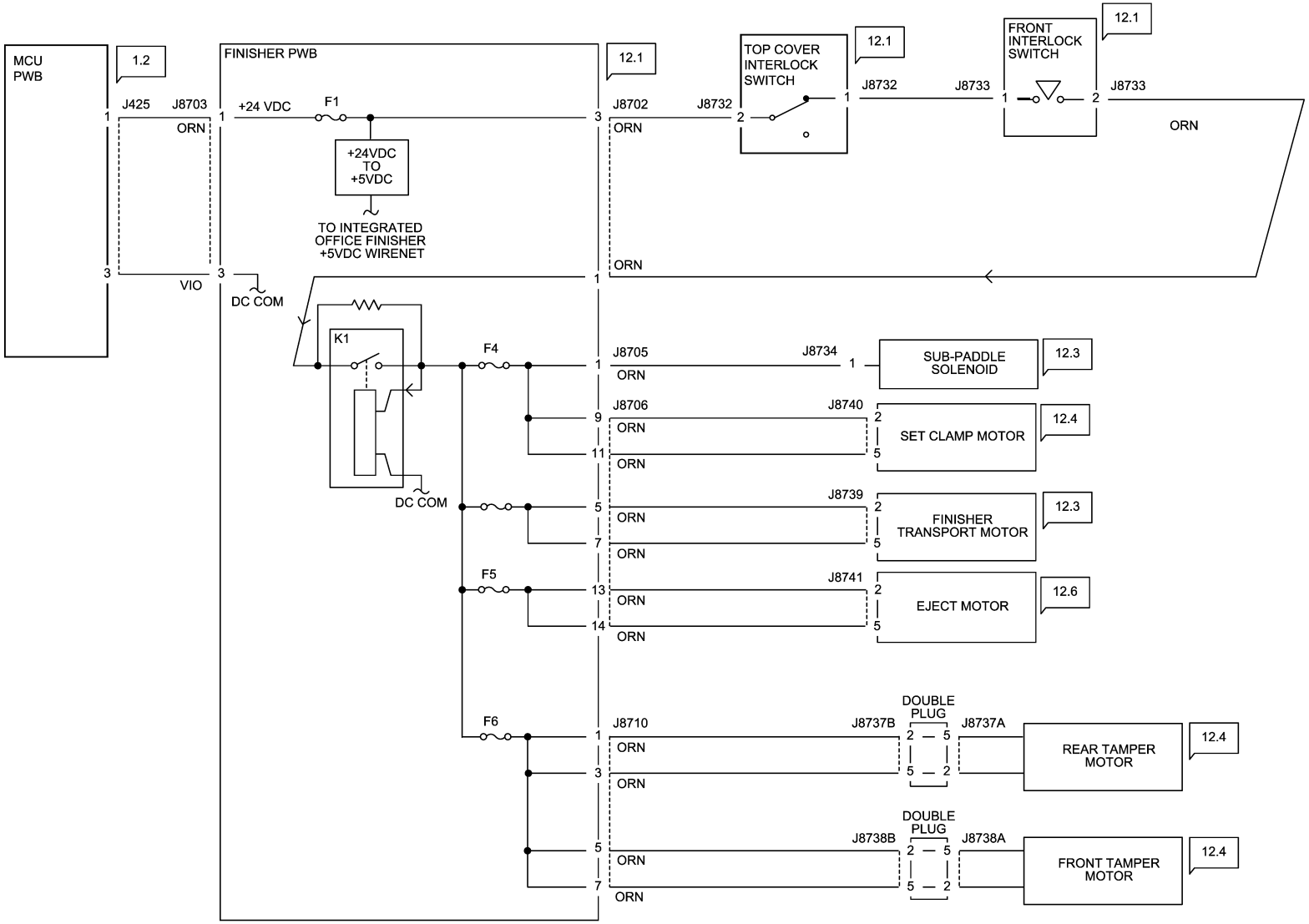

Figure 2 Integrated Finisher +24VDC Wirenet

INTEGRATED OFFICE FINISHER DC COM WIRENET

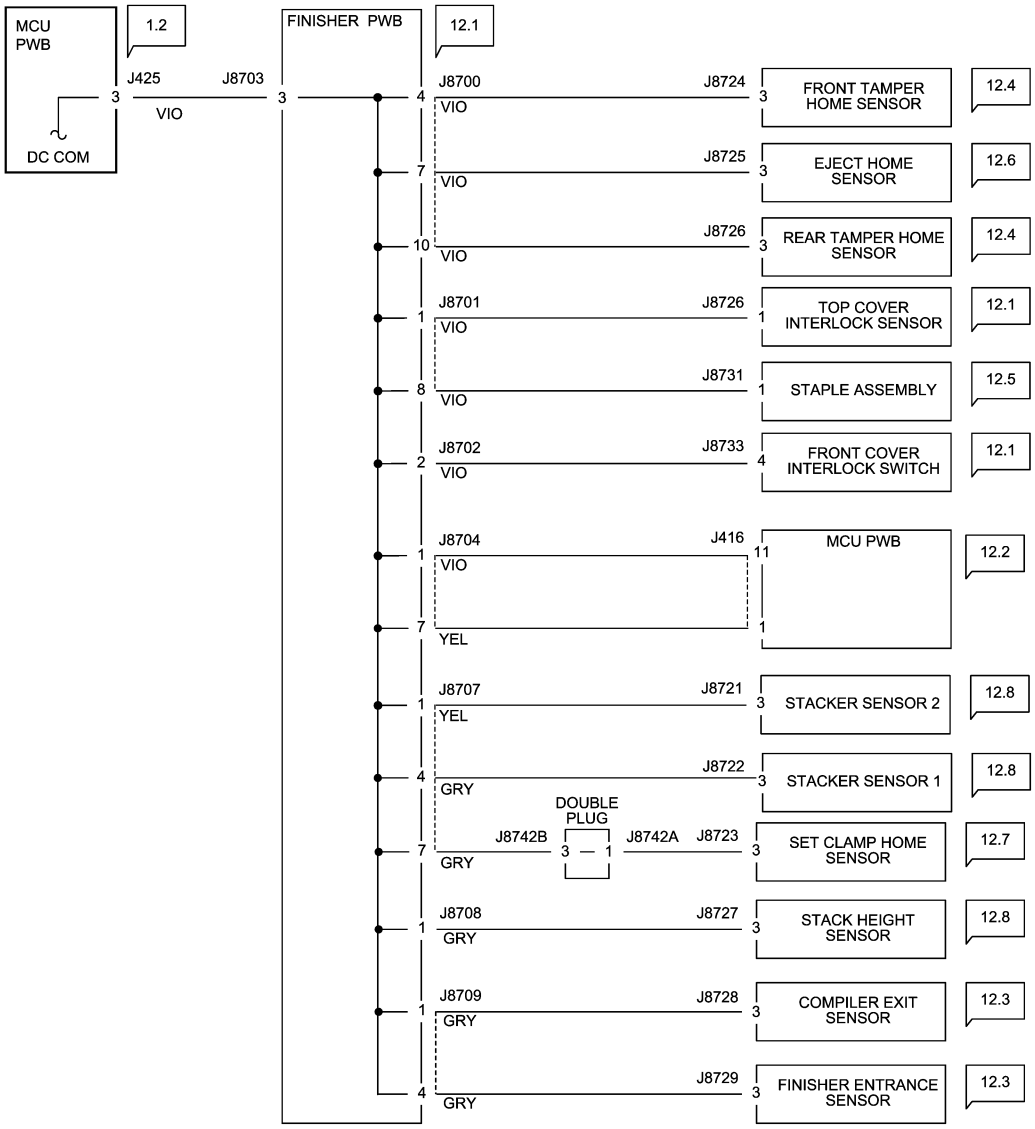

Figure 3 Integrated Finisher DC Common Wirenet

OFFICE FINISHER LX +5VDC WIRENET

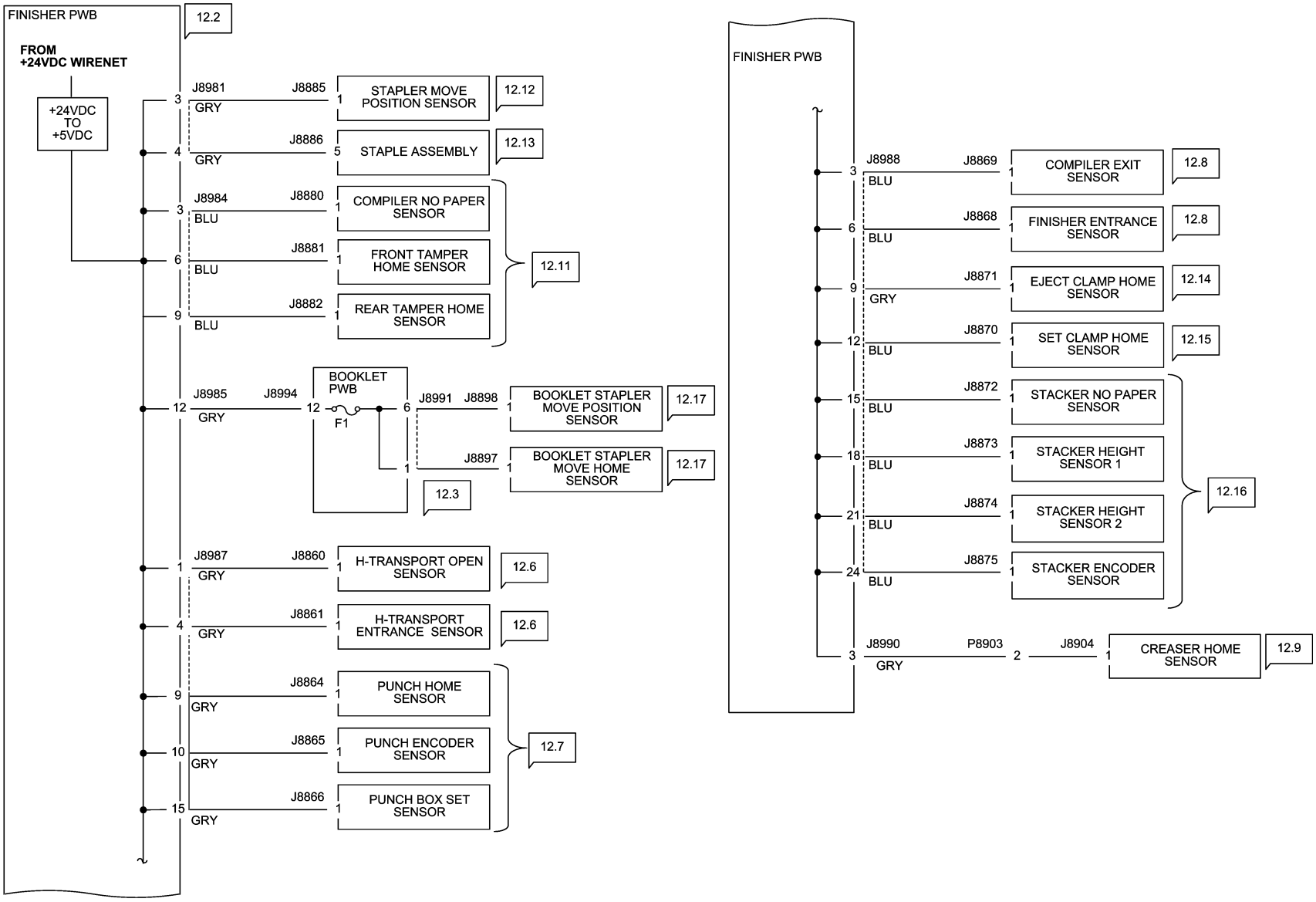

Figure 1 Office Finisher LX +5VDC Wirenet

OFFICE FINISHER LX +24VDC WIRENET

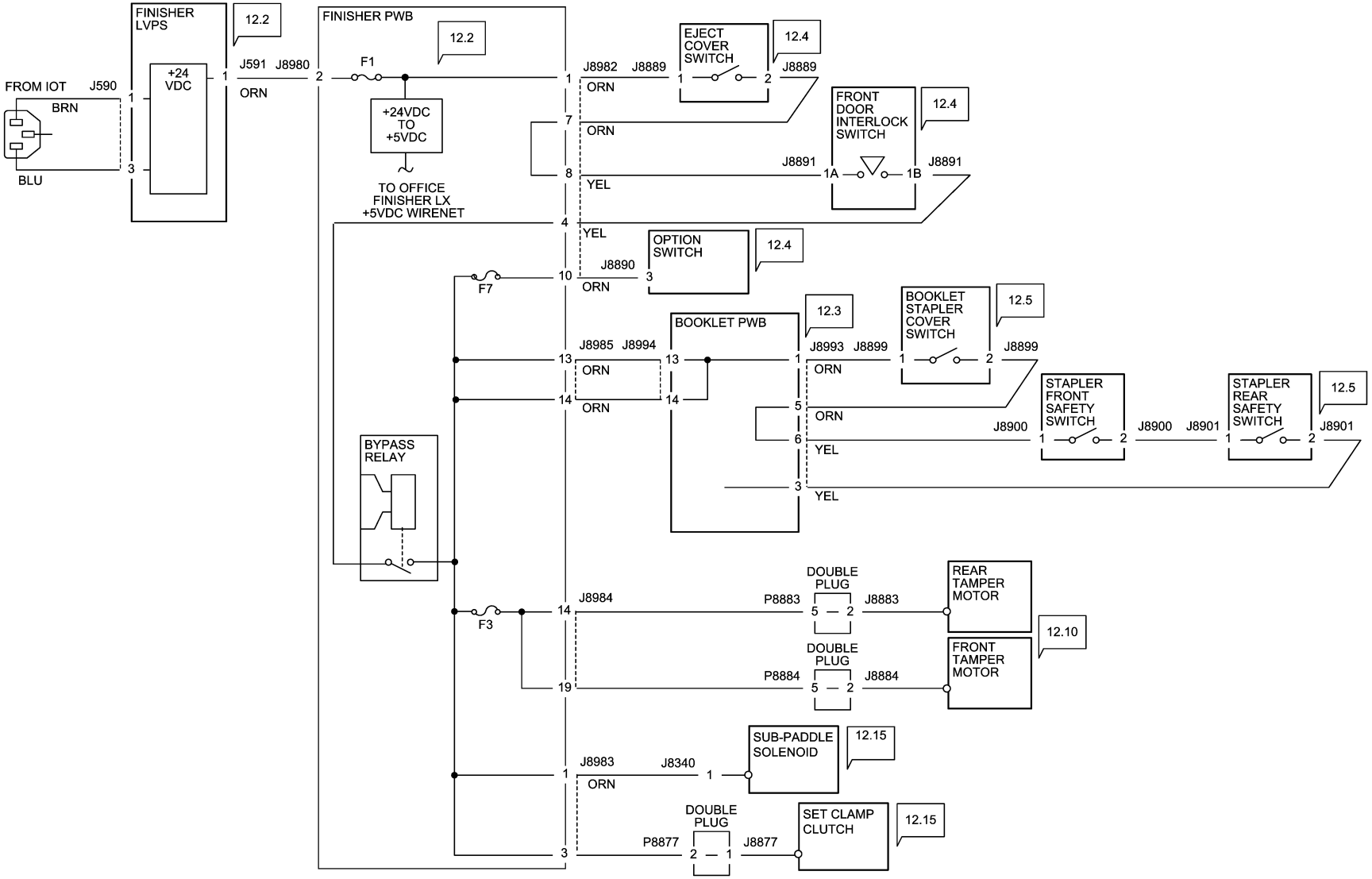

Figure 2 Office Finisher LX +24VDC Wirenet

OFFICE FINISHER LX DC COM WIRENET

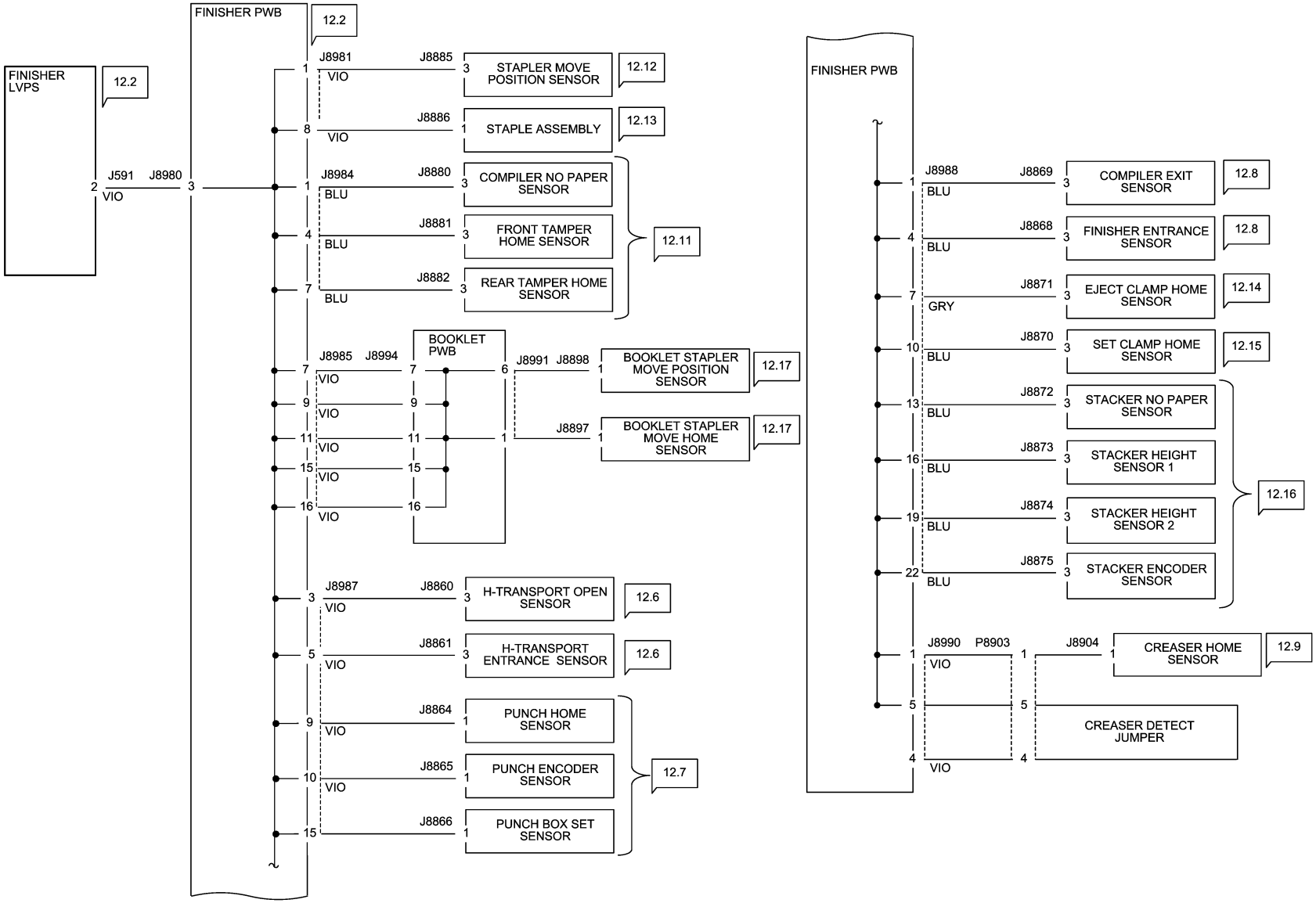

Figure 3 Office Finisher LX DC Common Wirenet

WorkCentre 7220/7225 BSDs

Table 1 7220/7225 BSDs

BSD 1.1 - Main Power On (1 of 2)
BDS 1.2 - Main Power On (2 of 2)
BSD 1.3 - LVPS Control
BSD 1.4 - DC Power Generation (1 of 2)
BSD 1.5 - DC Power Generation (2 of 2)
BSD 1.6 - IIT DC Power Distribution
BSD 1.7 - DC Power Distribution (Options)
BSD 1.8 - Power Interlock Switching (1 of 2)
BSD 1.9 - Power Interlock Switching (2 of 2)
BSD 2.1 - UI
BSD 3.1 - SBC - MCU Communication
BSD 3.2 - MCU - Tray Module Communication
BSD 3.3 - SBC - IIT Communication
BSD 3.4 - SBC - UI Communication
BSD 3.5 - SBC - DADF Communication
BSD 3.6 - IOT - Finisher Communication
BSD 3.7 - FDI Communication
BSD 3.8 - Electronic Billing
BSD 3.9 - Download Interface
BSD 4.1 - Main Drive Control
BSD 5.1 - Document Setting
BSD 5.2 - Document Size Sensing (1 of 2)
BSD 5.3 - Document Size Sensing (2 of 2)
BSD 5.4 - Document Feed (1 of 2)
BSD 5.5 - Document Feed (2 of 2)
BSD 5.6 - Document Scan and Invert
BSD 5.7 - Document Exit Transportation
BSD 5.8 - Document Path
BSD 5.9 - Document Transmission
BSD 6.1 - Document Illumination
BSD 6.2 - Copy Image Flow
BSD 6.3 - Scan Image Flow
BSD 6.4 - Print Image Flow
BSD 6.5 - FAX Image Flow
BSD 6.6 - Image Input
BSD 6.7 - Platen Document Sensing
BSD 6.8 - ROS Laser Control (1 of 2)
BSD 6.9 - ROS Laser Control (2 of 2)
BSD 7.1 - Tray 1 Paper Size Sensing
BSD 7.2 - Tray 2 Paper Size Sensing

Table 1 7220/7225 BSDs

BSD 7-3 - Tray 3 Paper Size Sensing
BSD 7.4 - Tray 4 Paper Size Sensing
BSD 7.5 - Tray 5 (MSI) Paper Size Sensing
BSD 7.6 - Tray 1 Paper Stacking
BSD 7.7 - Tray 2 Paper Stacking
BSD 7.8 - Tray 3 Paper Stacking
BSD 7.9 - Tray 4 Paper Stacking
BSD 7.10 - TRAY 5 (MSI) Paper Stacking
BSD 8.1 - Tray 1, 2, MSI Paper Transportation
BSD 8.2 - Tray Module Paper Transportation (1 of 2)
BSD 8.3 - Tray Module Paper Transportation (2 of 2)
BSD 8.4 - Registration
BSD 8.5 - Paper Path
BSD 9.1 - Drum/IBT Drive Control
BSD 9.2 - Developer Drive Control
BSD 9.3 - Xero Life Control (Y, M)
BSD 9.4 - Xero Life Control (C, K)
BSD 9.5 - Charging & Exposure
BSD 9.6 - Development (YMC) 1 of 2
BSD 9.7 - Development (YMC) 2 of 2
BSD 9.8 - Development (K)
BSD 9.9 - Toner Cartridge Life Control (Y, M)
BSD 9.10 - Toner Cartridge Life ControL (C, K)
BSD 9.11 - Toner Dispense Control
BSD 9.12 - ADC & Environment Sensing
BSD 9.13 - Color Registration Control
BSD 9.14 - 1ST BTR Contact Retract Control
BSD 9.15 - Image Transfer to Transfer Belt
BSD 9.16 - Image Transfer to Paper
BSD 9.17 - Stripping
BSD 9.18 - Drum Cleaning
BSD 9.19 - Transfer Belt Cleaning
BSD 9.20 - Waste Toner Disposal
BSD 10.1 - Fuser Drive Control
BSD 10.2 - Fusing Heat Control (1 of 2)
BSD 10.3 - Fusing Heat Control (2 of 2)
BSD 10.4 - Electrical Components (Fusing Heat)
BSD 10.5 - Fusing
BSD 10.6 - Fused Paper Exit 1 OCT Control
BSD 10.7 - Fused Paper Exit 2
BSD 10.8 - Duplex Transportation
BSD 12.1 Integrated Finisher DC Power and Interlock Switching

Table 1 7220/7225 BSDs

BSD 12.2 IOT - Integrated Finisher Communication
BSD 12.3 Integrated Finisher Transportation
BSD 12.4 Integrated Finisher tamping and Offset
BSD 12.5 Integrated Finisher Staple Control
BSD 12.6 Integrated Finisher Set Eject (1 of 2)
BSD 12.7 Integrated Finisher Set Eject (2 of 2)
BSD 12.8 Integrated Finisher Stacker Tray Control
BSD 12.1 Office Finisher LX Communication (IOT-Finisher)
BSD 12.2 Office Finisher LX DC Power Generation
BSD 12.3 Office Finisher LX DC Power Distribution
BSD 12.4 Office Finisher LX Interlock Switching
BSD 12.5 Office Finisher LX Booklet Interlock Switching
BSD 12.6 Office Finisher LX Horizontal Transportation
BSD 12.7 Office Finisher LX Punch
BSD 12.8 Office Finisher LX Transportation
BSD 12.9 Office Finisher LX Folding
BSD 12.10 Office Finisher LX Tamping and offset (1 of 2)
BSD 12.11 Office Finisher LX Tamping and Offset (2 of 2)
BSD 12.12 Office Finisher LX Staple Positioning
BSD 12.13 Office Finisher LX Staple Control
BSD 12.14 Office Finisher LX Eject Control (1 of 2)
BSD 12.15 Office Finisher LX Eject Control (2 of 2)
BSD 12.16 Office Finisher LX Stacker Tray Control
BSD 12.17 Office Finisher LX Booklet Staple Positioning
BSD 12.18 Office Finisher LX Booklet Staple Control (1 of 2 - Front)
BSD 12.19 Office Finisher LX Booklet Staple Control (2 of 2 -Rear)
BSD 16.1 - SBC
BSD 34.1 - FAX

Chain 1 - Input Power

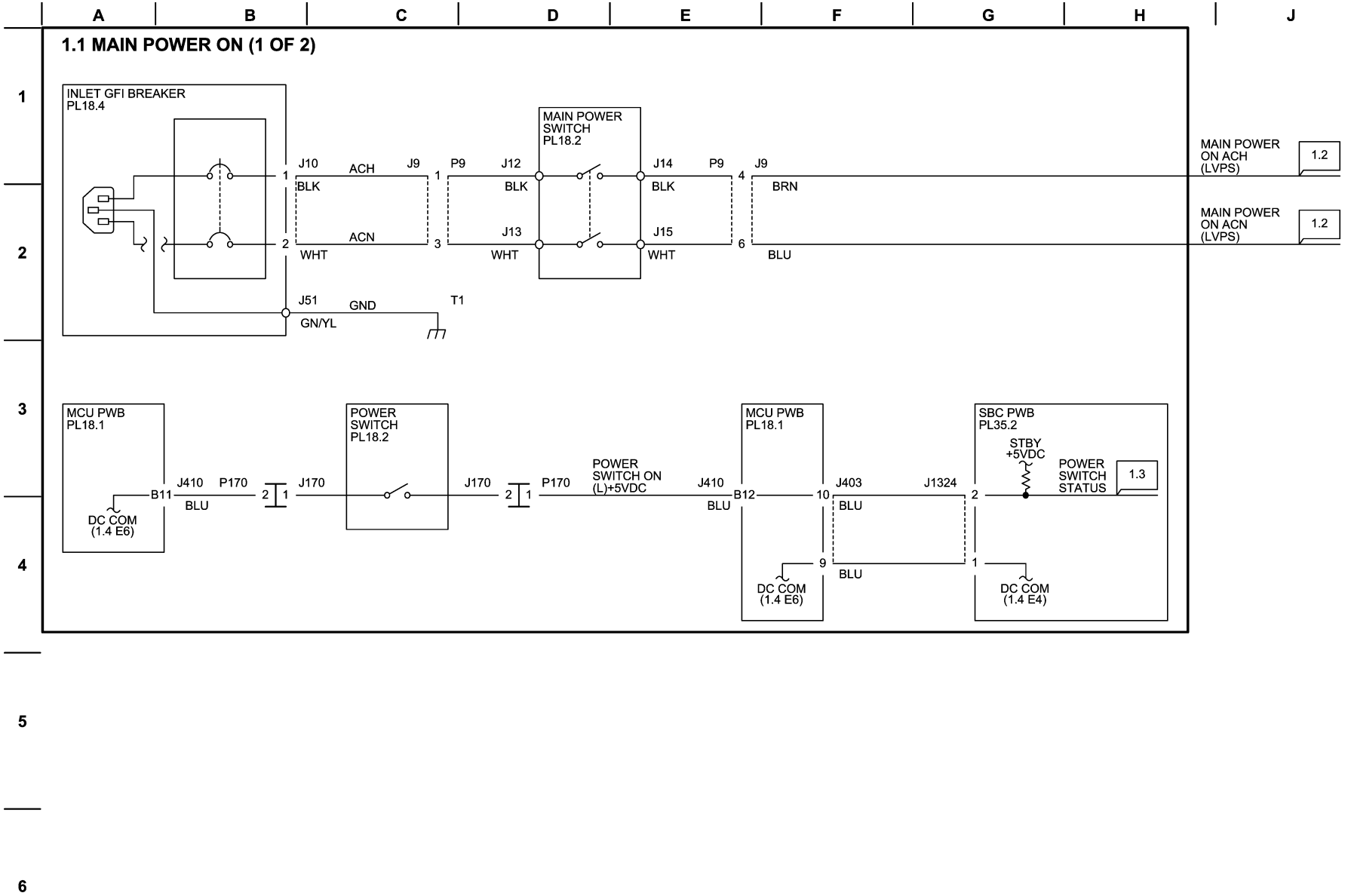

Figure 1 BSD 1.1 - Main Power On (1 of 2)

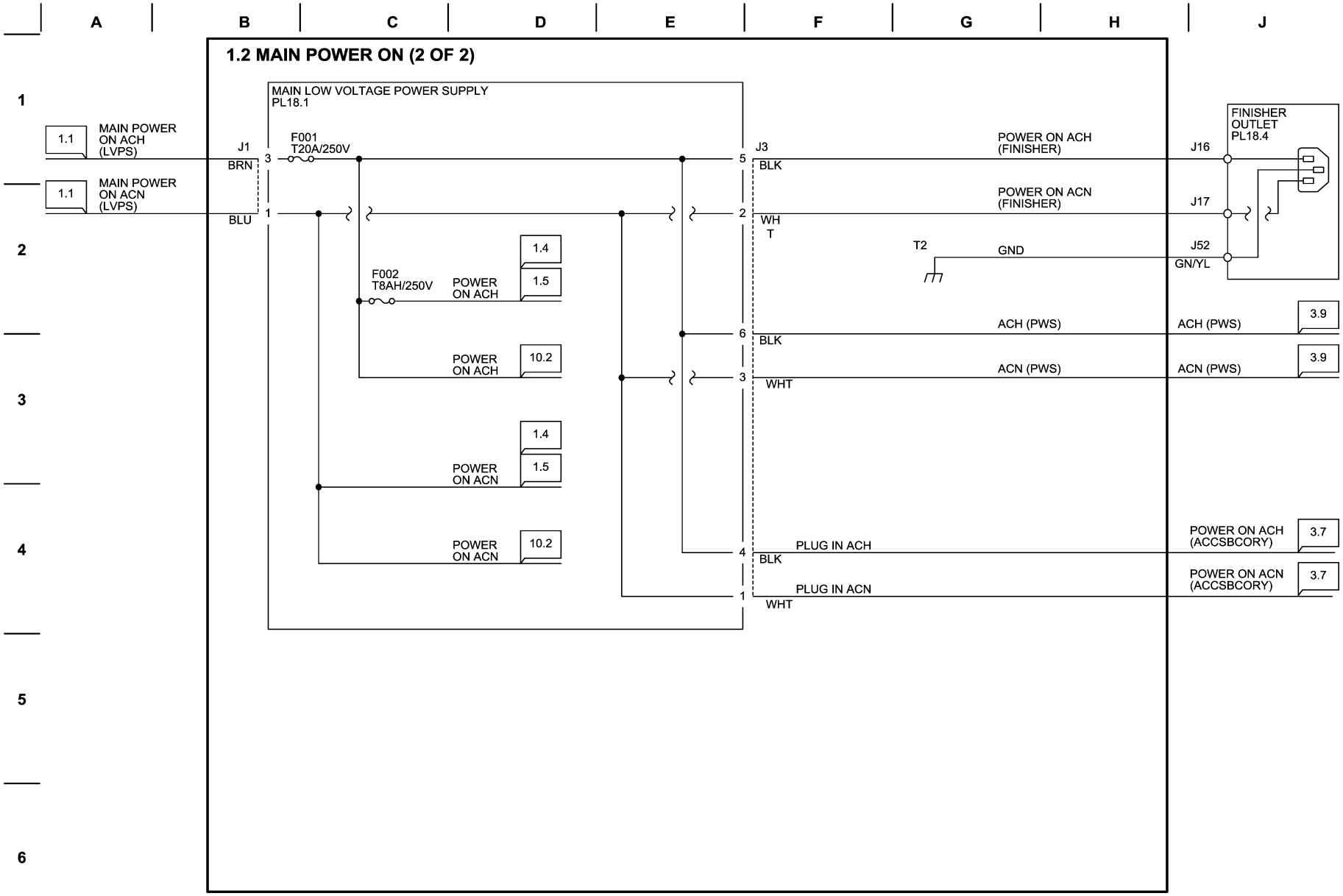

Figure 2 BDS 1.2 - Main Power On (2 of 2)

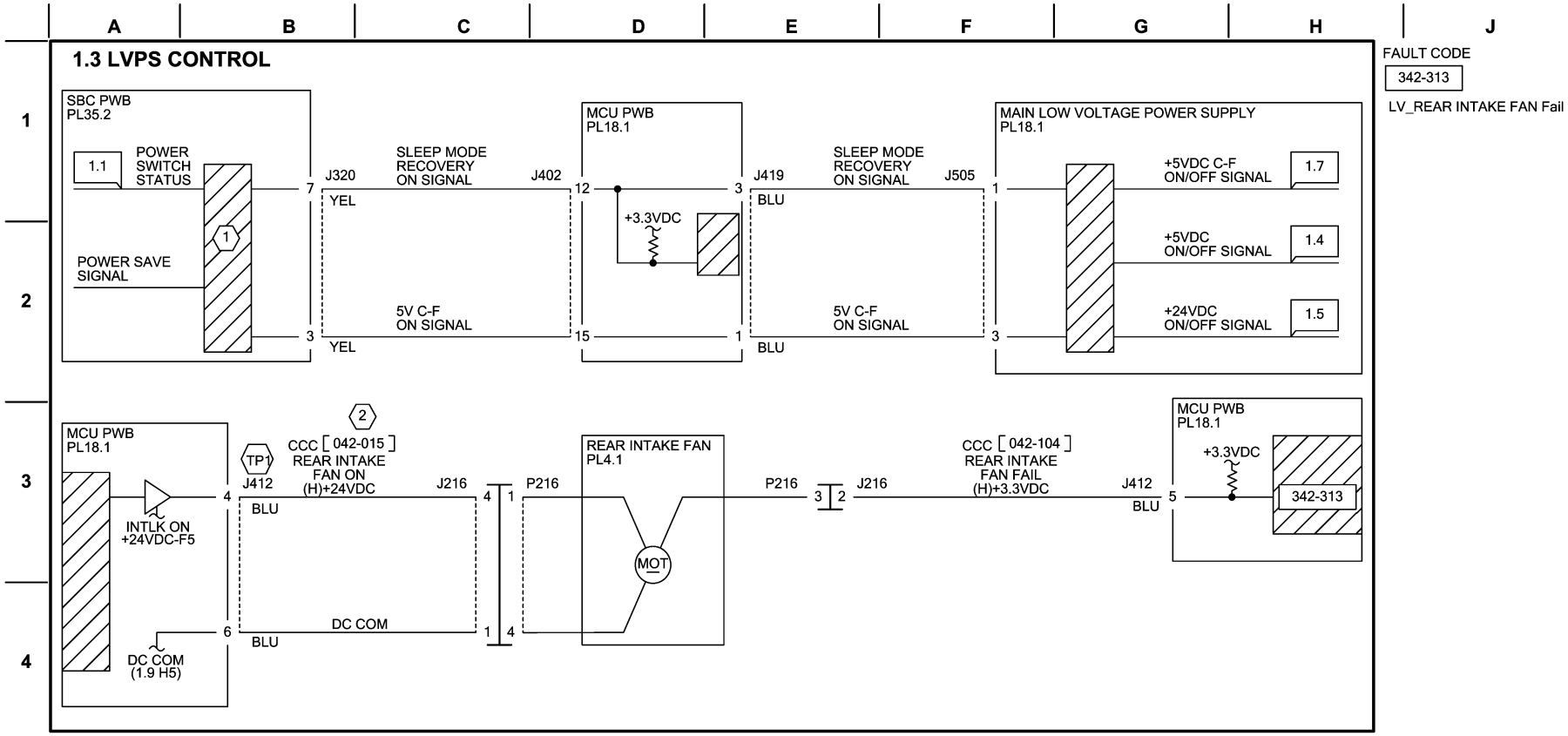

NOTE: (1) THE TABLE BELOW SHOWS THE RELATION BETWEEN SLEEP MODE RECOVERY ON SIGNAL/5V C-F ON SIGNAL AND MAIN LVPS OUTPUTS, AND THE OPERATION OF LV REAR INTAKE FAN IN EACH POWER MODE.

	WARM UP /RUN	STANDBY /LOW POWER	Semi Low Power /Sleep	Power Switch OFF	Main Power Switch OFF
SLEEP MODE RECOVERY ON SIGNAL	HIGH	HIGH	Low	Low	Low
5V C-F ON SIGNAL	HIGH				
STBY+5VDC OUTPUT	ON	ON	ON	ON	OFF
+5VDC C-F OUTPUT	ON	ON			
+5VDC OUTPUT	ON	ON	OFF	OFF	OFF
+24VDC	ON	ON	OFF	OFF	OFF
REAR INTAKE FAN	HIGH SPEED.				

(2) TURNING ON CCC[042-015] MAKES THE FAN ROTATE AT HIGH SPEED. TURNING IT OFF MAKES IT ROTATE AT LOW SPEED.

(TP1) TEST POINT
MCU PWB J412-4 (+) TO GND
CCC[042-015] ON HIGH SPEED ROTATION: APPROX. +24VDC
CCC[042-015] OFF LOW SPEED ROTATION: APPROX. +12VDC

Figure 3 BSD 1.3 - LVPS Control

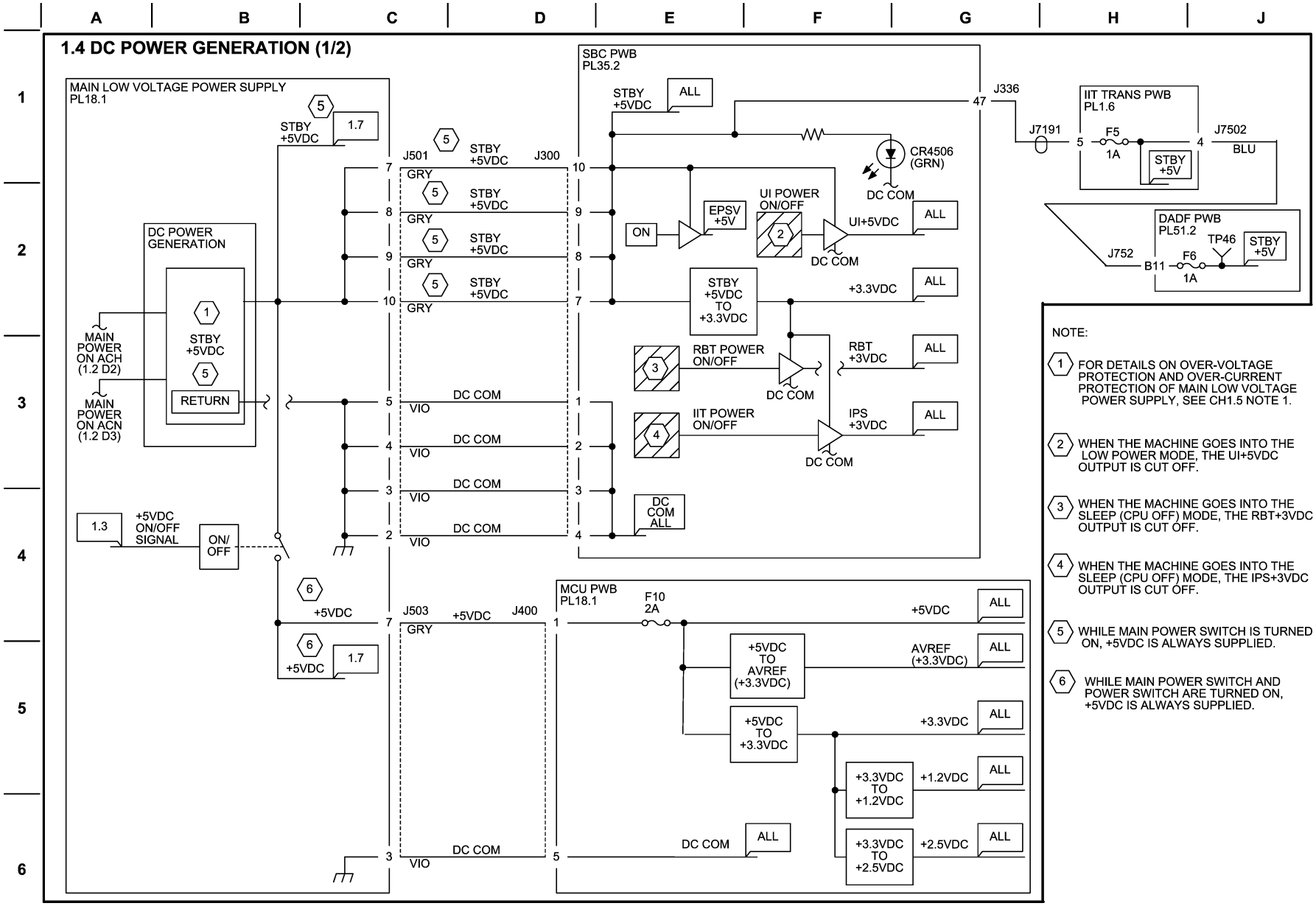

Figure 4 BSD 1.4 - DC Power Generation (1 of 2)

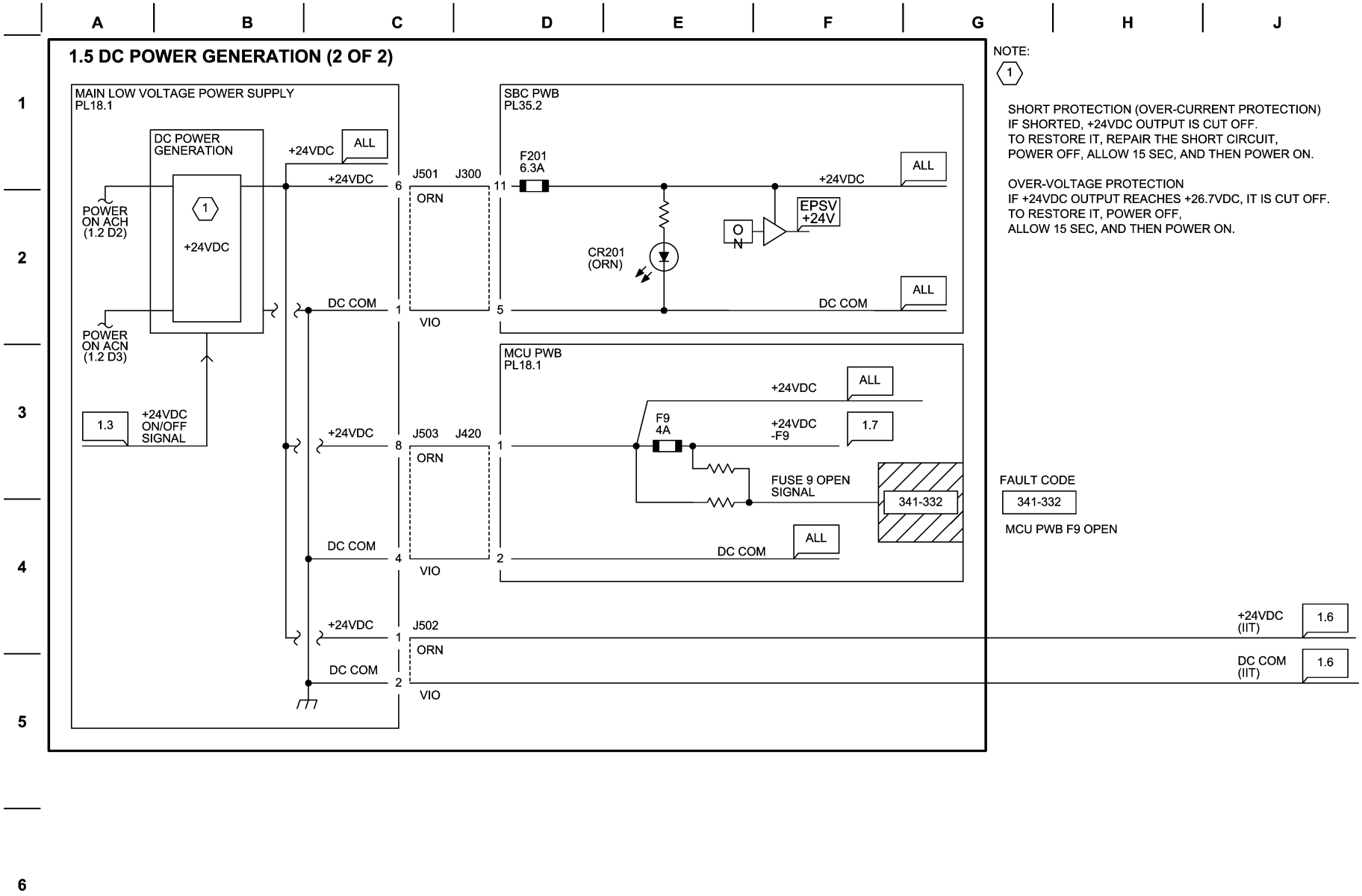

Figure 5 BSD 1.5 - DC Power Generation (2 of 2)

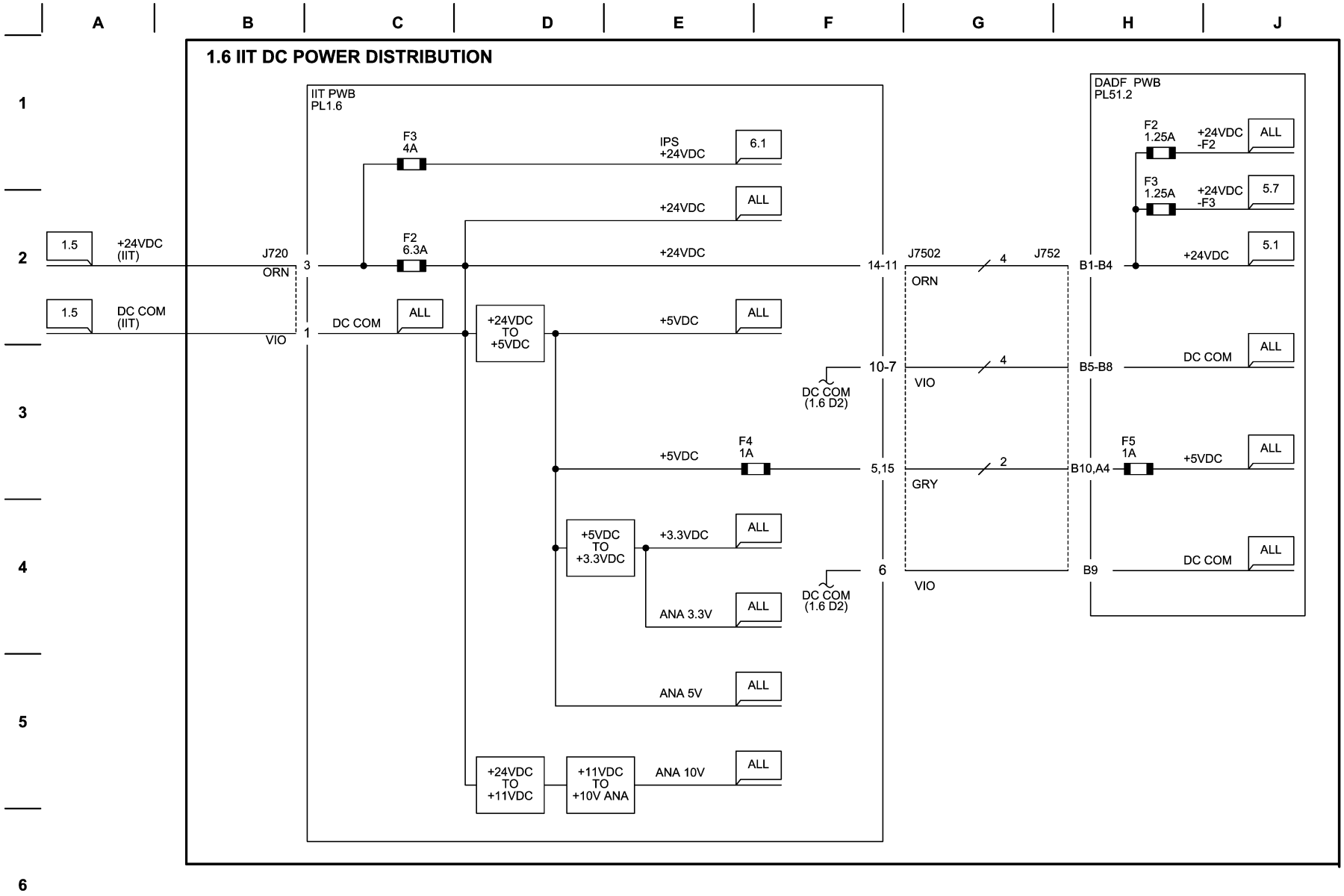

Figure 6 BSD 1.6 - IIT DC Power Distribution

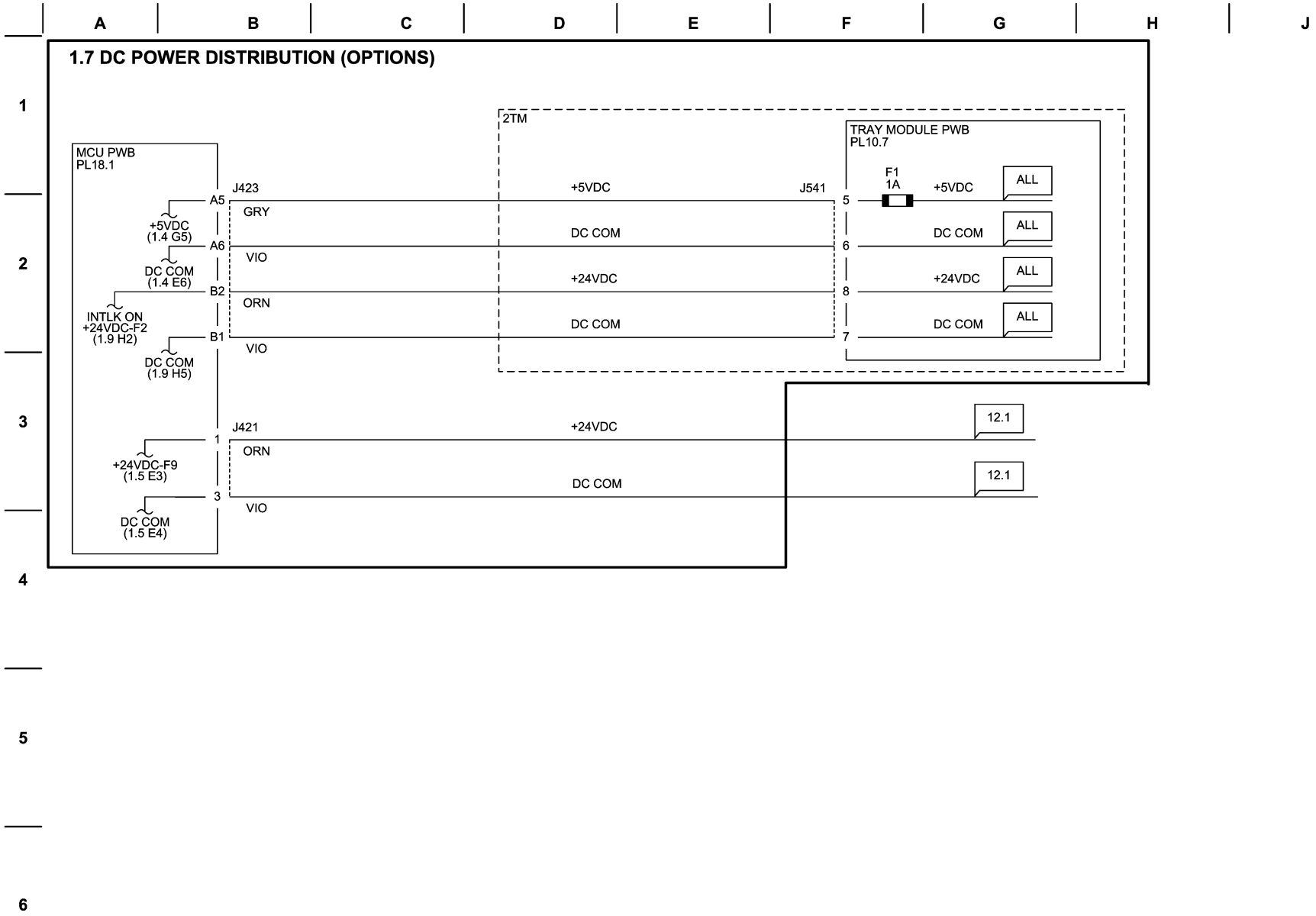

Figure 7 BSD 1.7 - DC Power Distribution (Options)

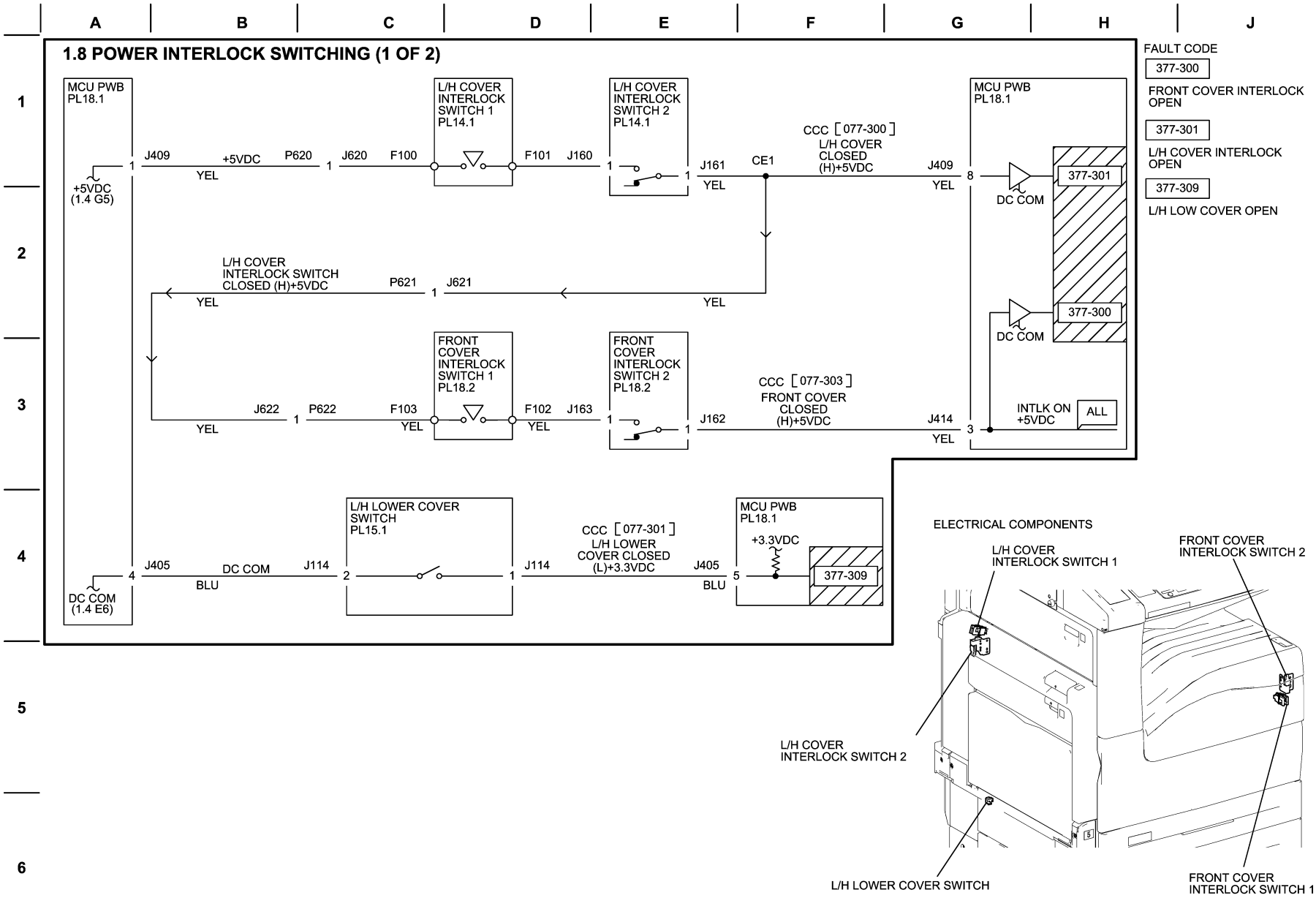

Figure 8 BSD 1.8 - Power Interlock Switching (1 of 2)

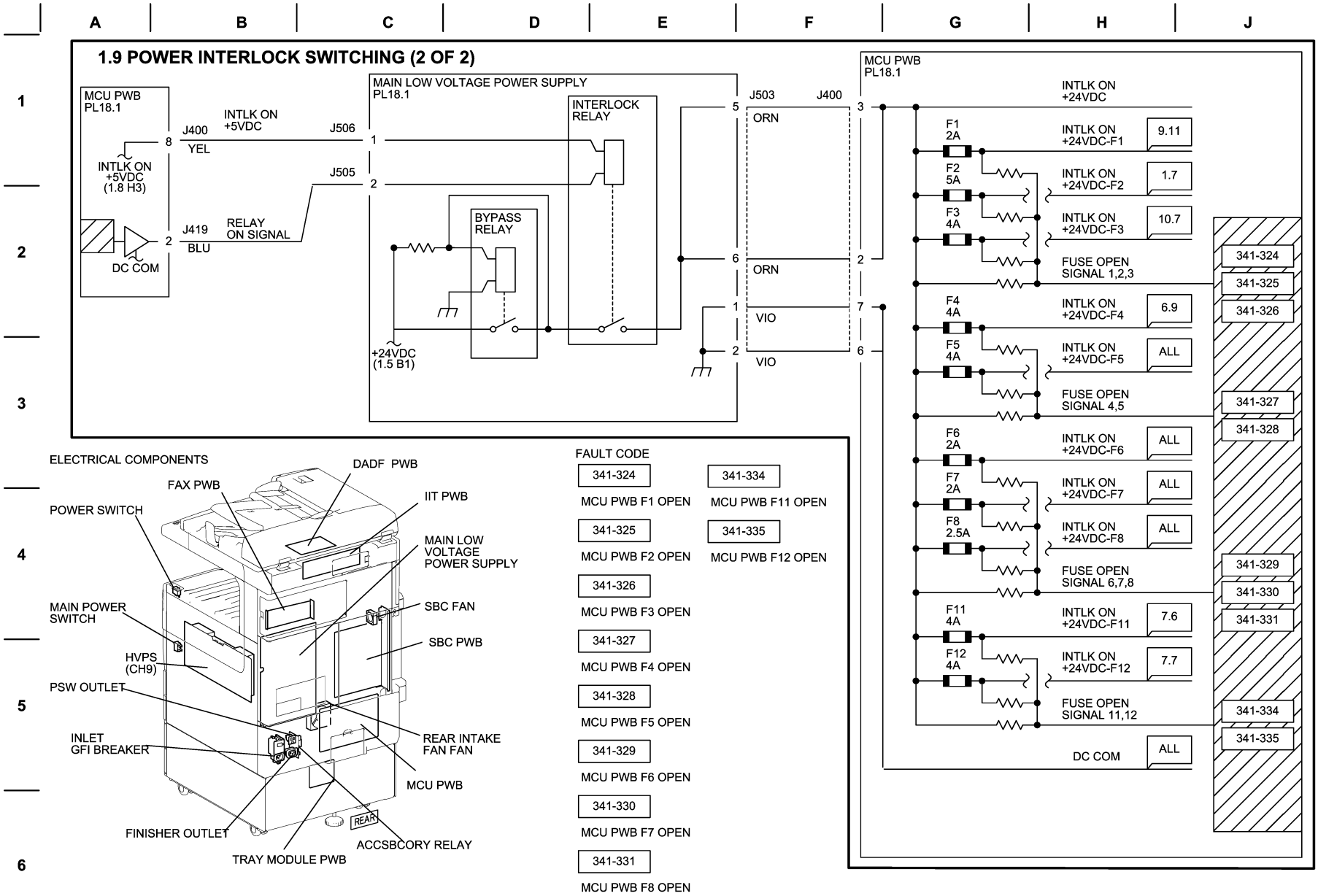

Figure 9 BSD 1.9 - Power Interlock Switching (2 of 2)

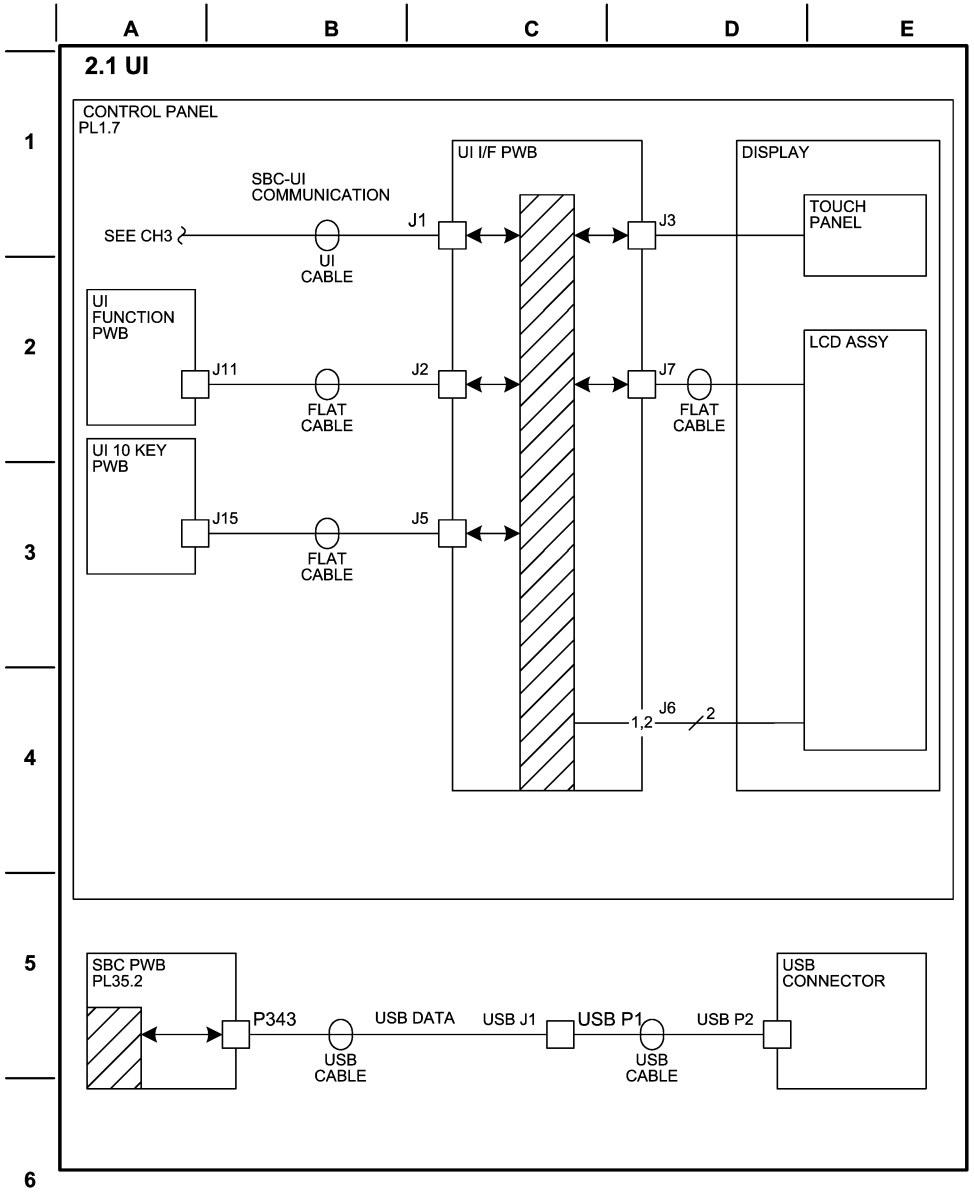

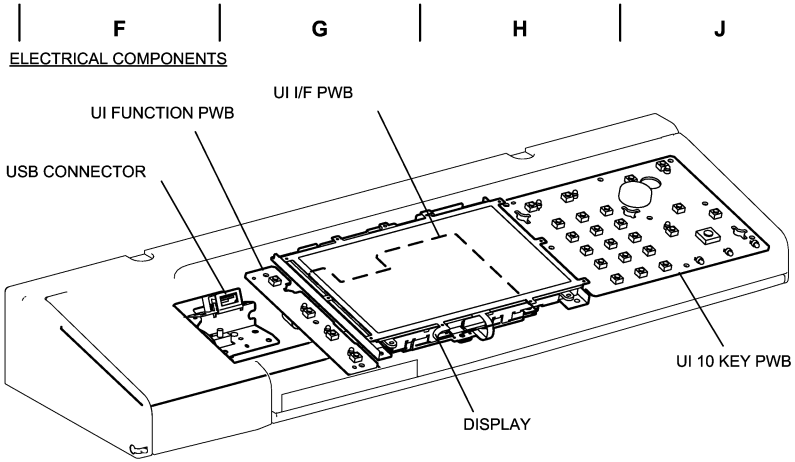

Figure 1 BSD 2.1 - UI

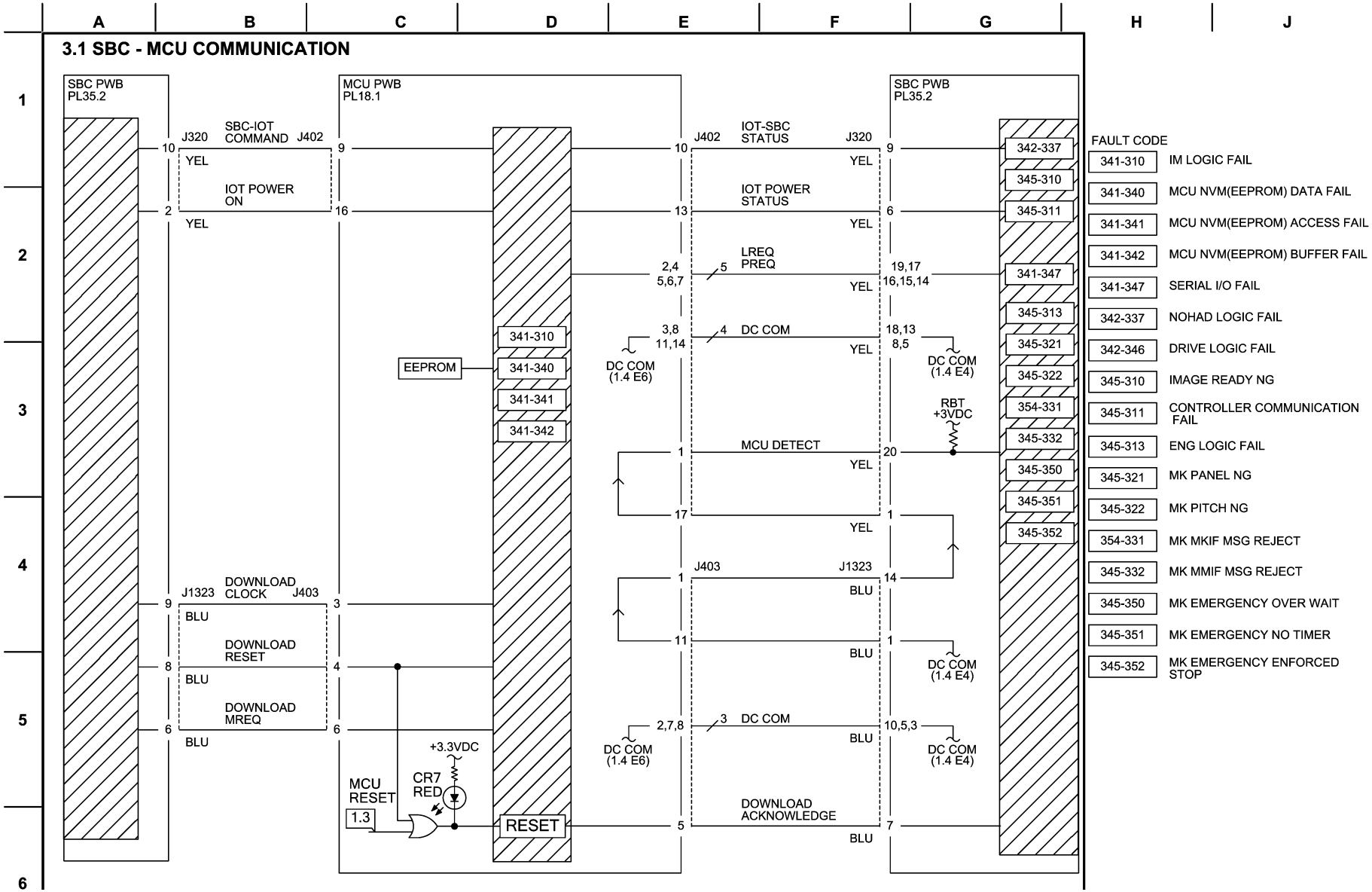

Figure 1 BSD 3.1 - SBC - MCU Communication

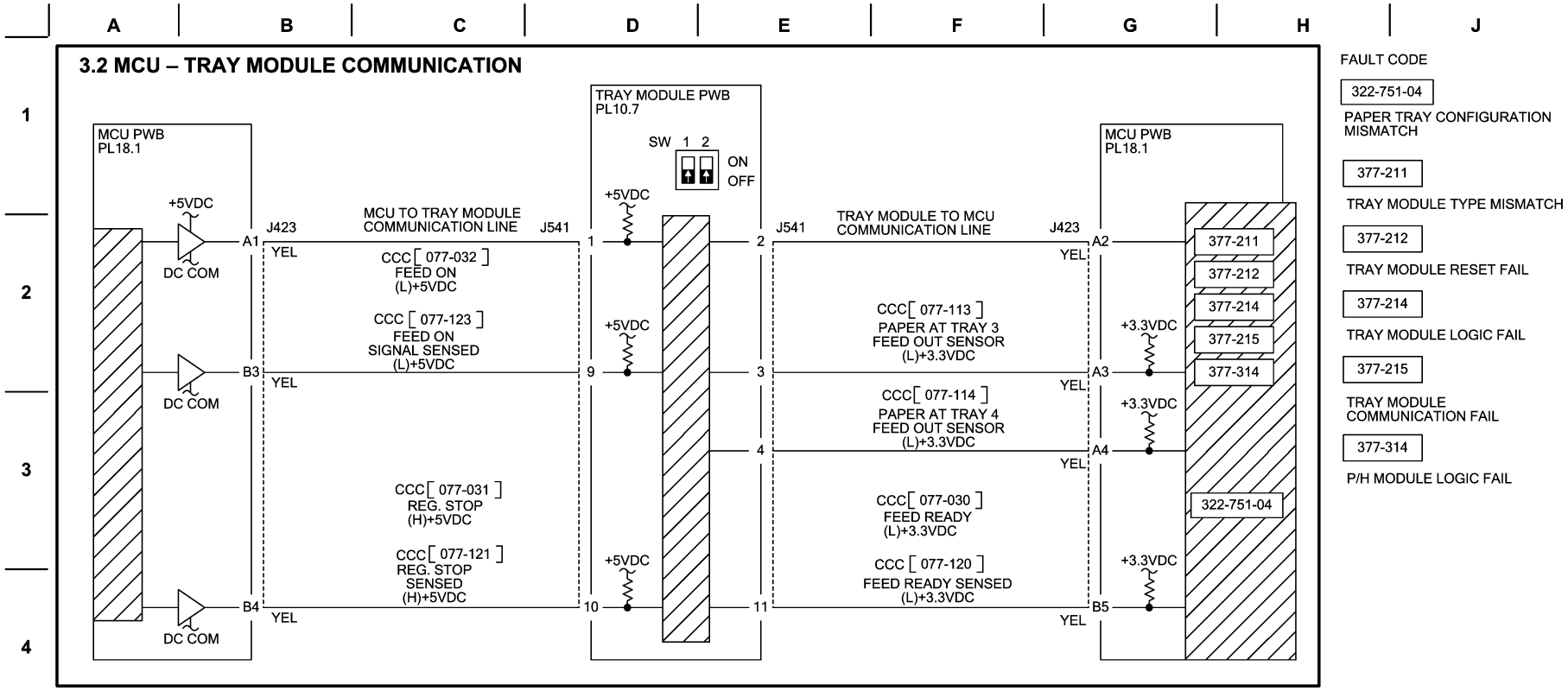

Figure 2 BSD 3.2 - MCU - Tray Module Communication

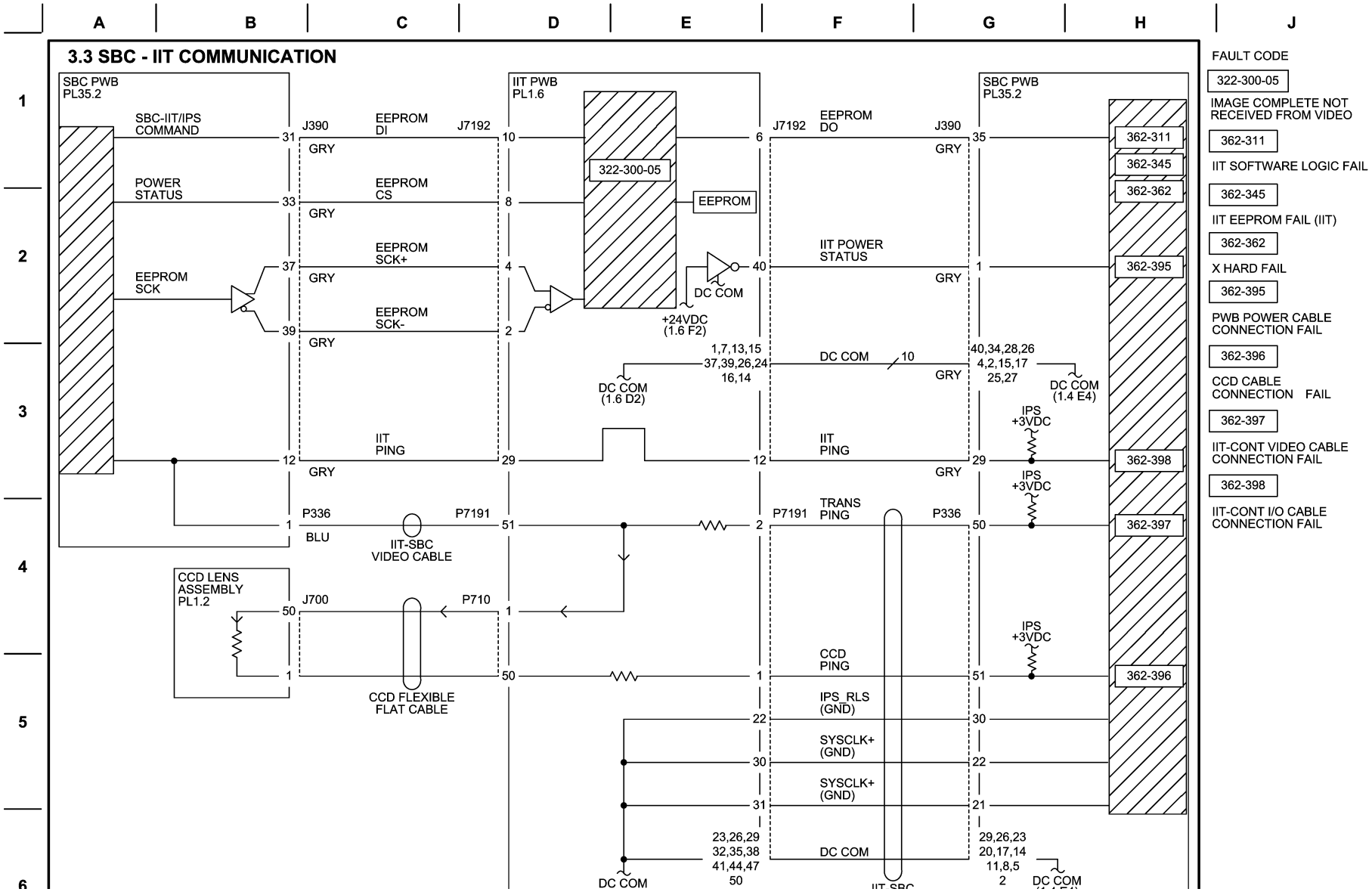

Figure 3 BSD 3.3 - SBC - IIT Communication

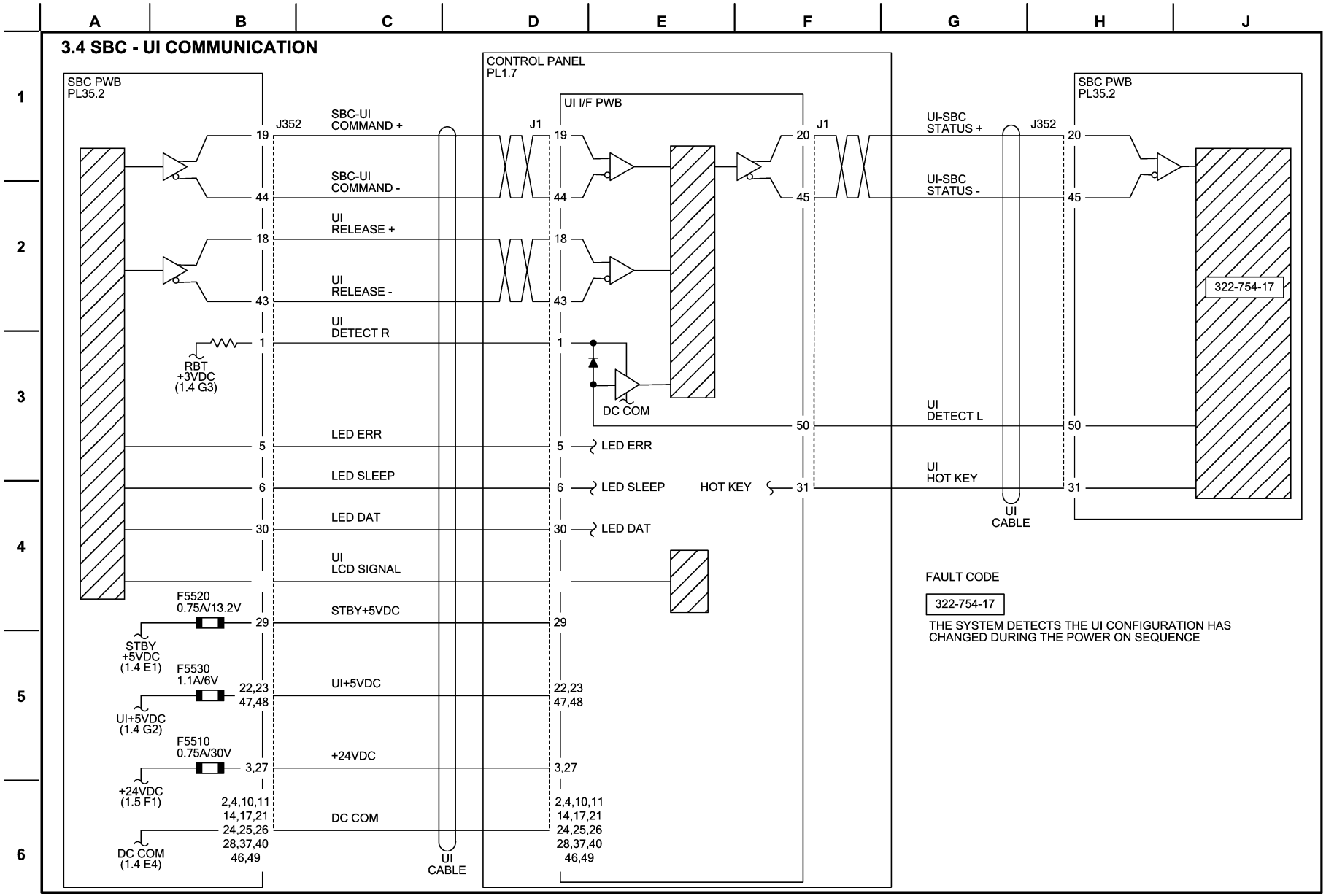

Figure 4 BSD 3.4 - SBC - UI Communication

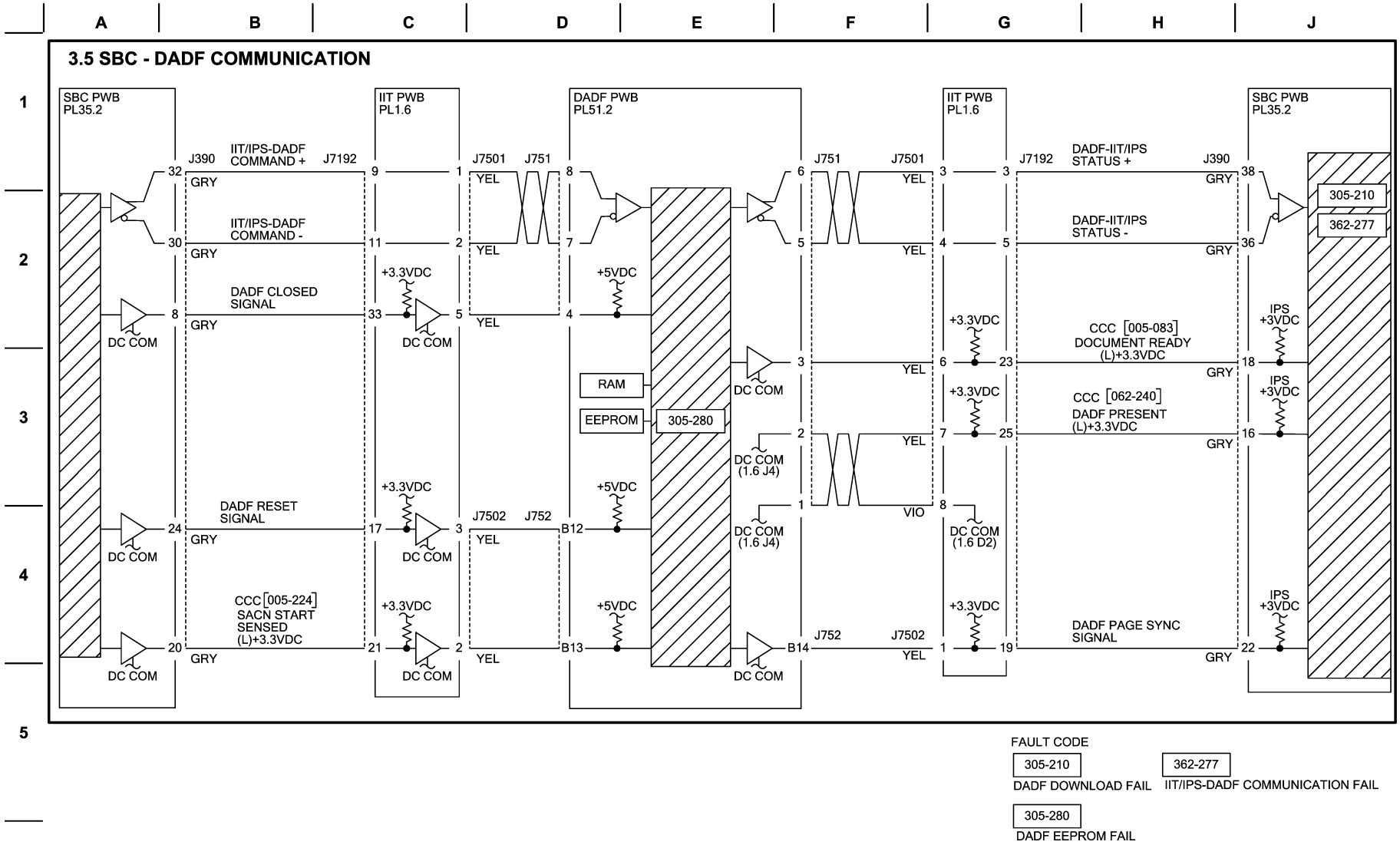

Figure 5 BSD 3.5 - SBC DADF Communication

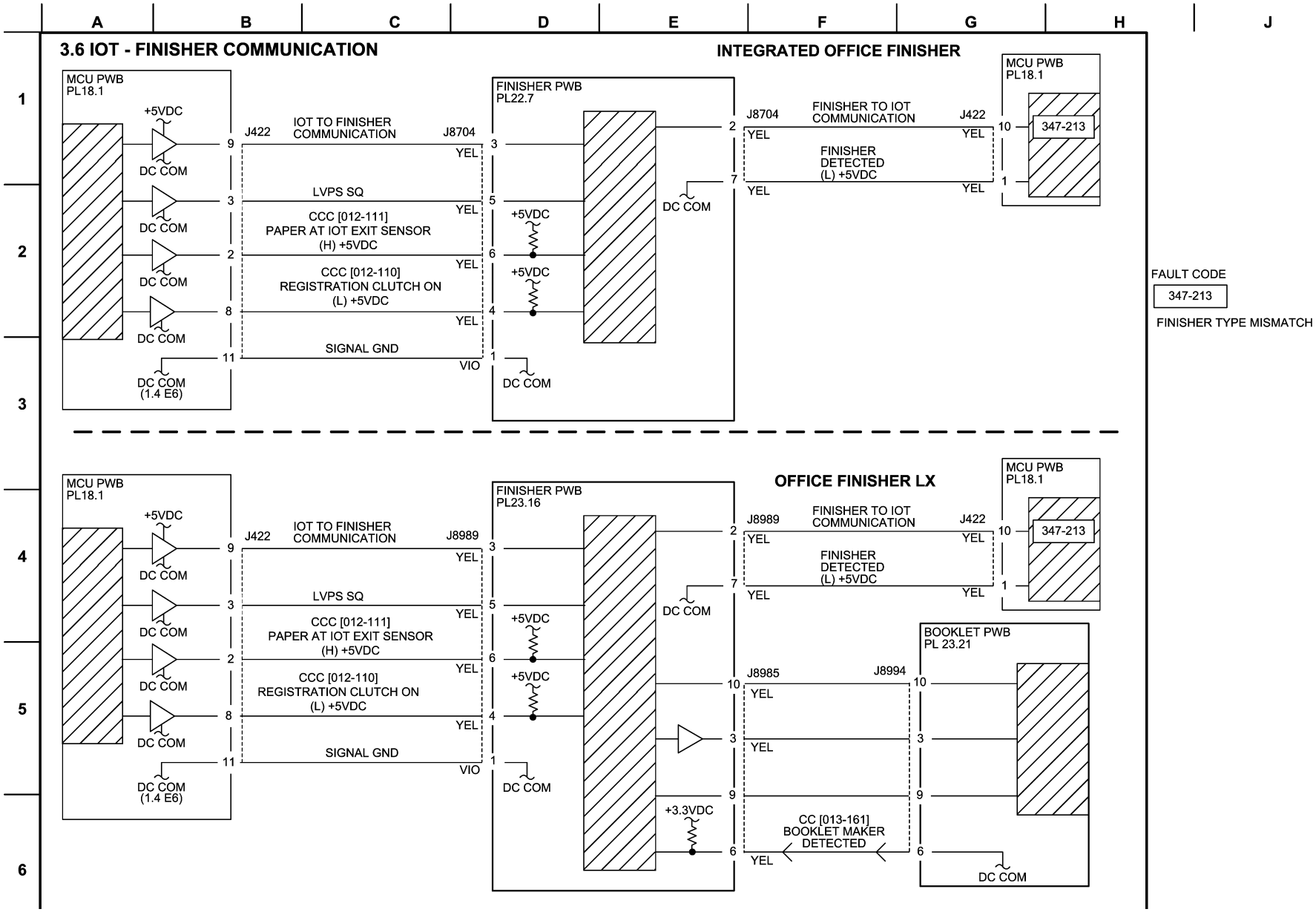

Figure 6 BSD 3.6 - IOT - Finisher Communication

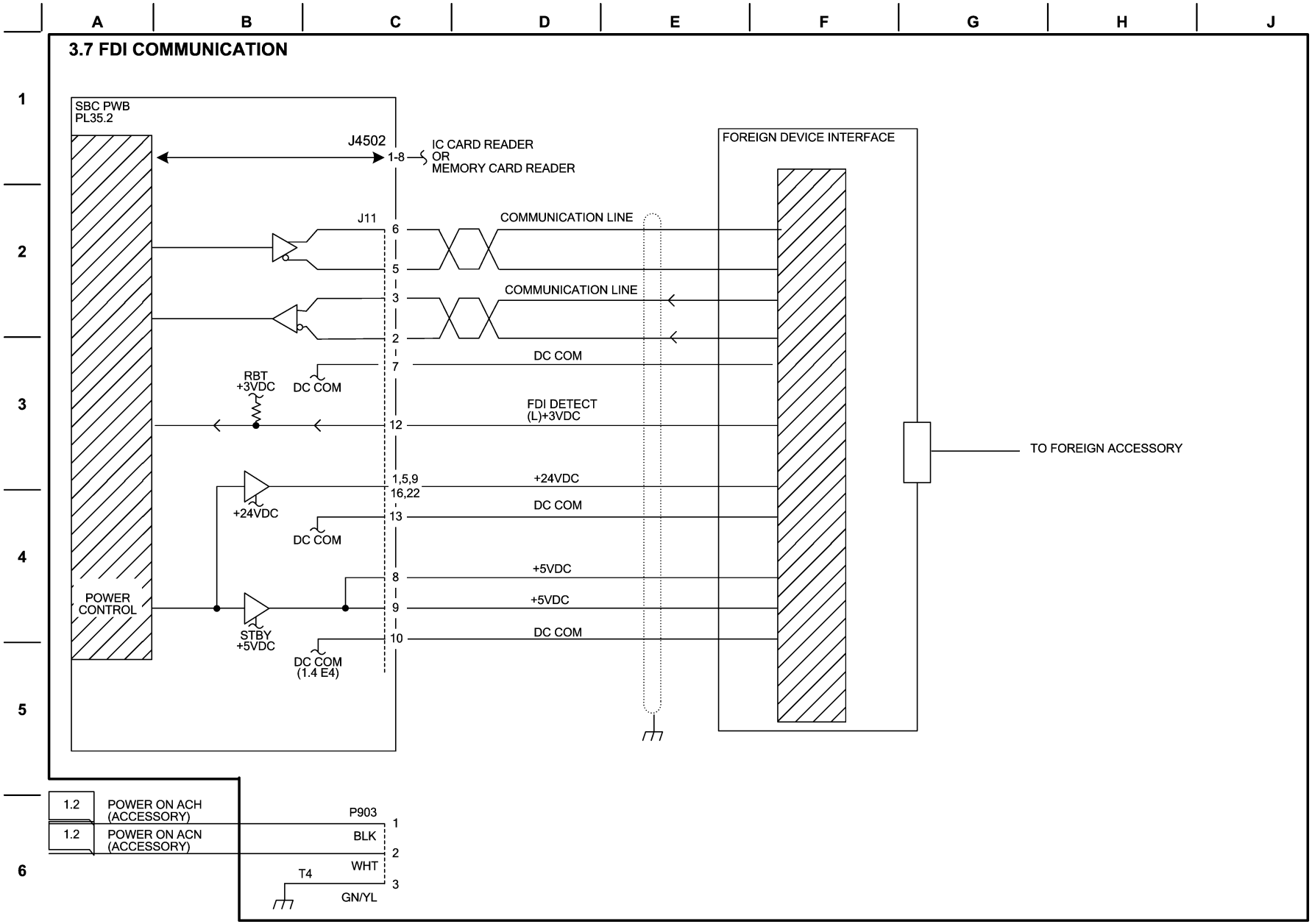

Figure 7 BSD 3.7 - FDI Communication

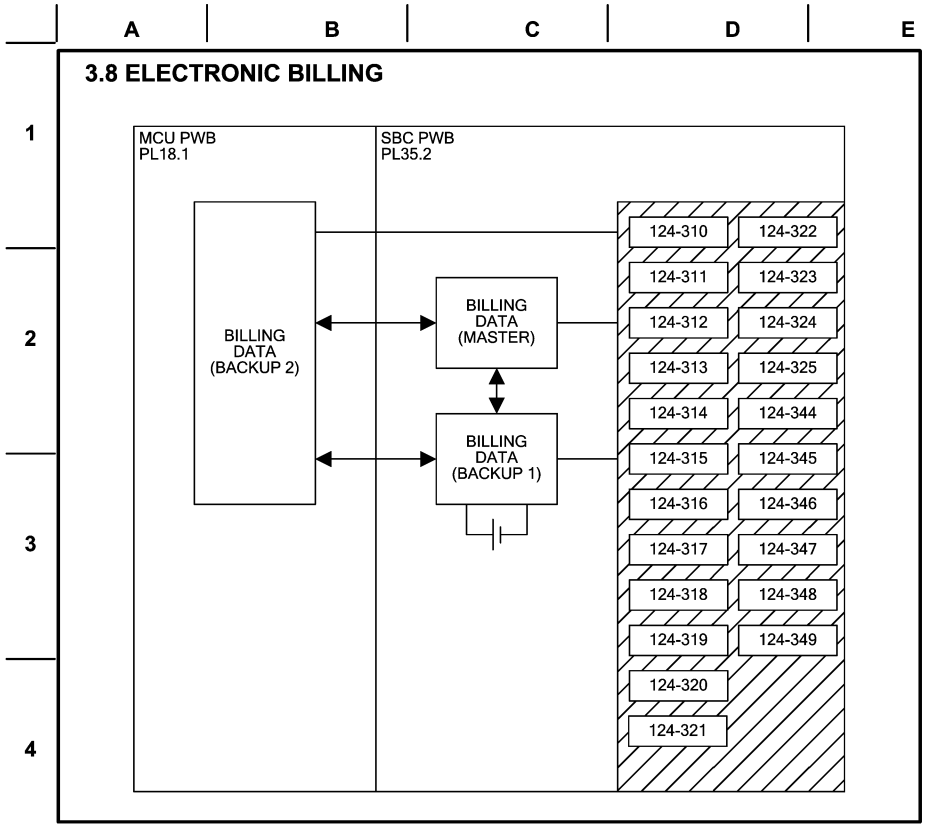

FAULT CODE

124-310	DC132 11
124-311	DC132 09
124-312	DC132 12
124-313	DC132 10
124-314	DC132 01
124-315	DC132 02
124-316	DC132 03
124-317	DC132 04
124-318	DC132 07
124-319	DC132 08
124-320	SEEPROM FAIL
124-321	BACKUP SRAM FAIL
124-322	DC132 05
124-323	DC132 06
124-324	ALL BILLINGS MISMATCH
124-325	BILLING RESTORATION FAIL
124-344	ALL BILLING METER TYPES MISMATCH
124-345	BILLING METER TYPE RESTORATION FAIL
124-346	ALL BILLING COUNT TYPES MISMATCH
124-347	BILLING COUNT TYPE RESTORATION FAIL
124-348	ALL MODAL BREAK POINTS MISMATCH
124-349	MODAL BREAK POINT RESTORATION FAIL

Figure 8 BSD 3.8 - Electronic Billing

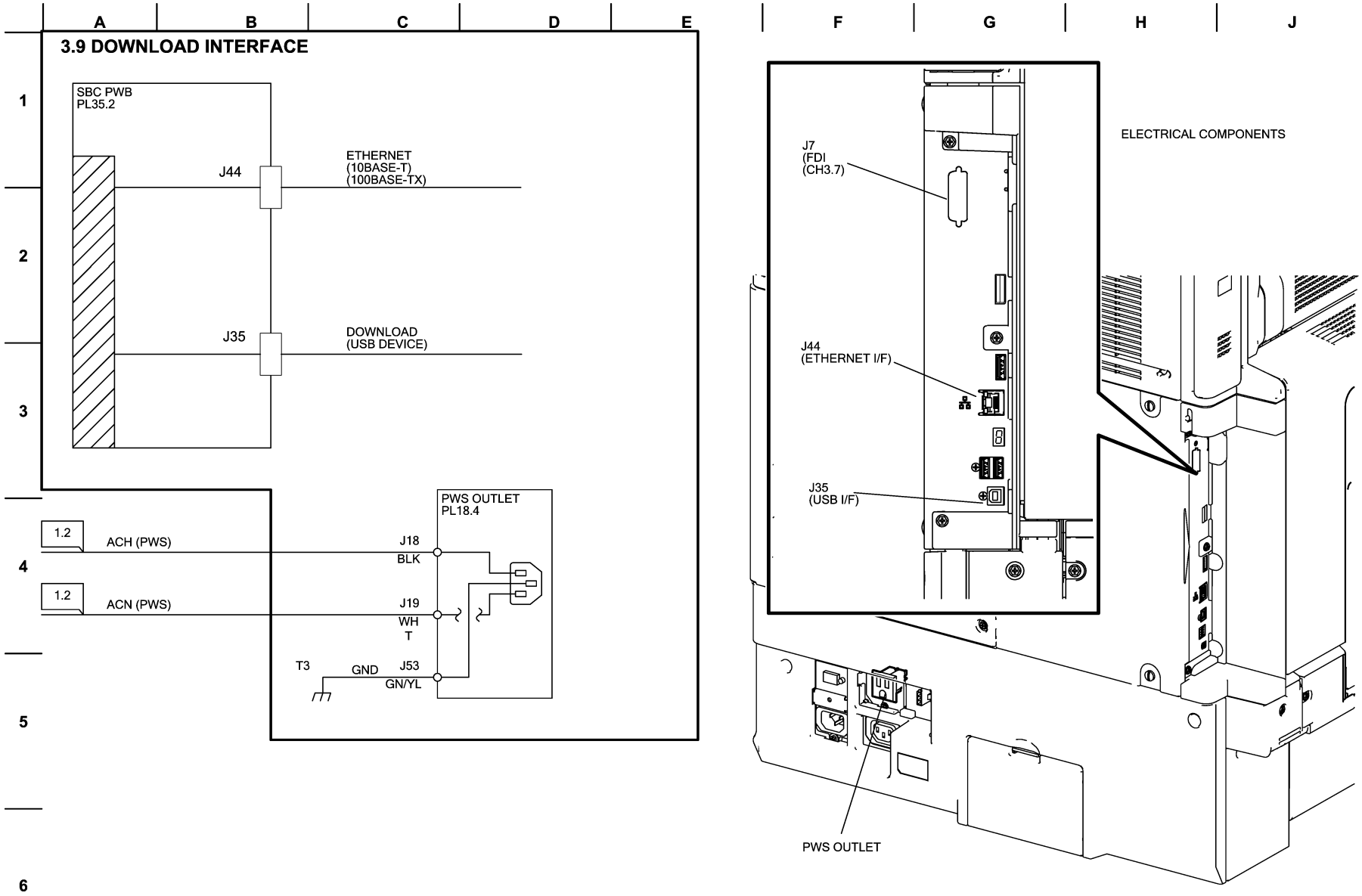

Figure 9 BSD 3.9 Download Interface

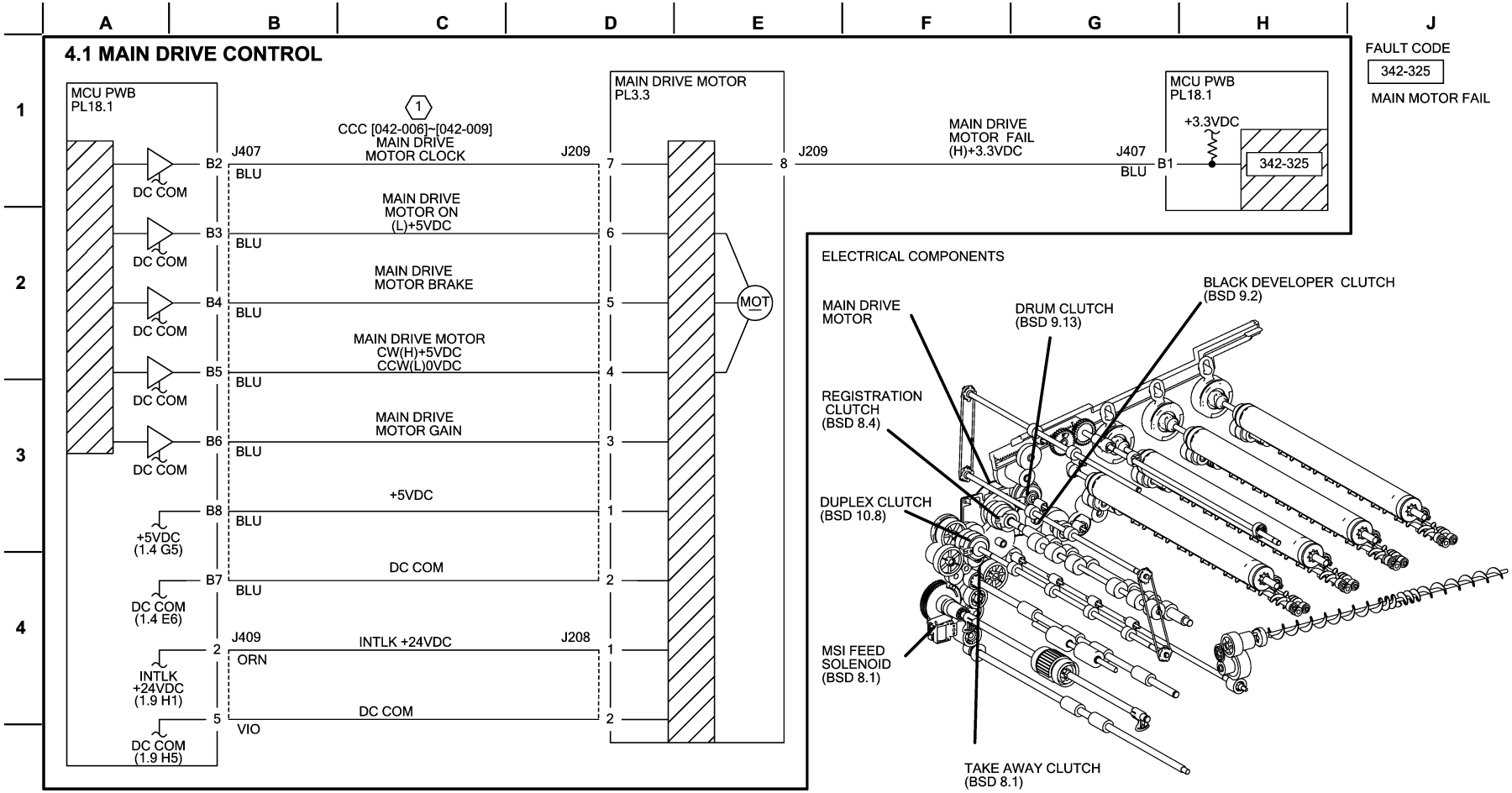

NOTE: (1) THE SPEED VARIES DEPENDING ON THE COMPONENT CONTROL CODE.

MAIN DRIVE MOTOR	SPEED
CCC[042-006]	126MM/SEC
CCC[042-007]	63MM/SEC
CCC[042-008]	126MM/SEC (REVERSE)
CCC[042-009]	63MM/SEC (REVERSE)

Figure 1 BSD 4.1 - Main Drive Control

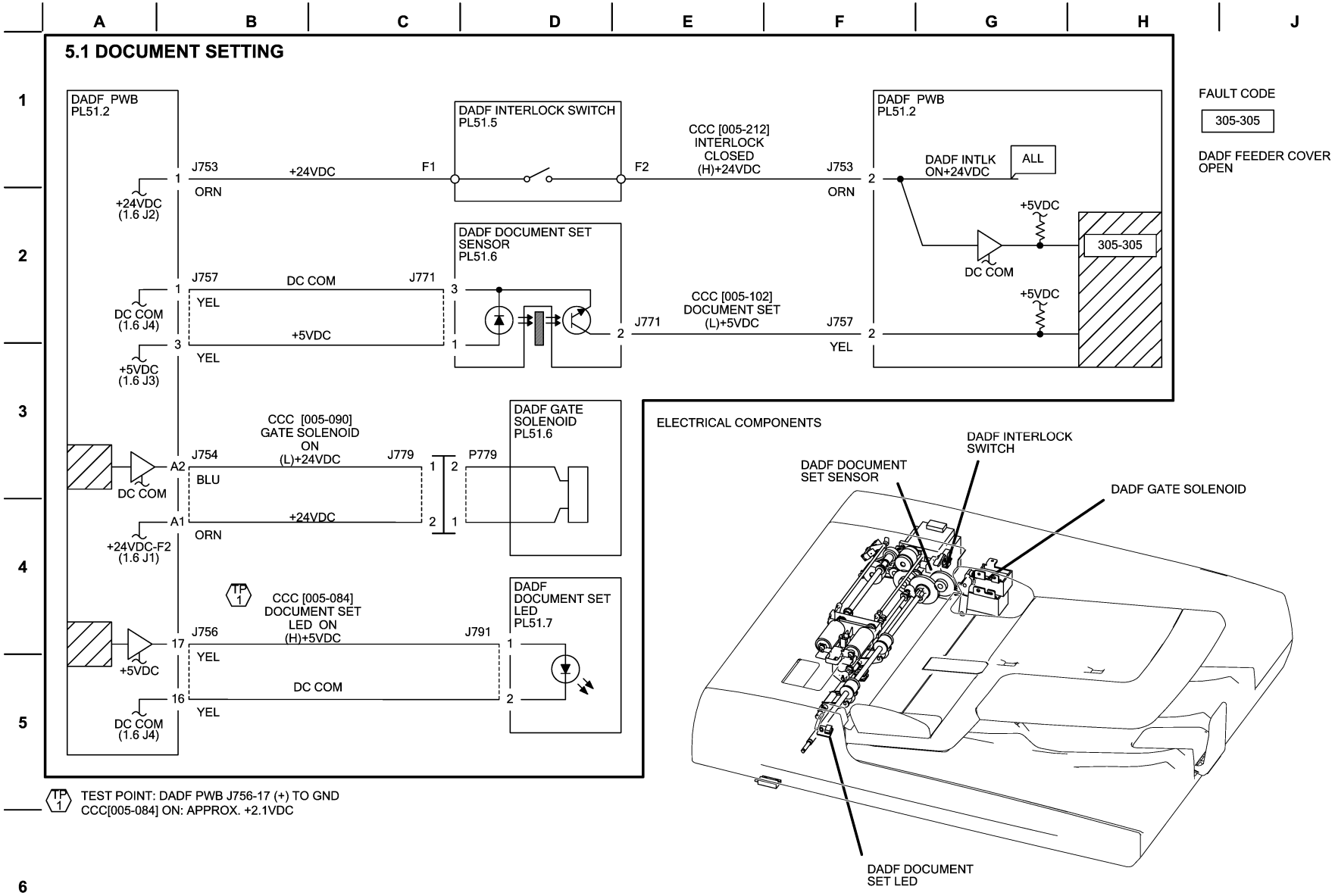

Figure 1 BSD 5.1 - Document Setting

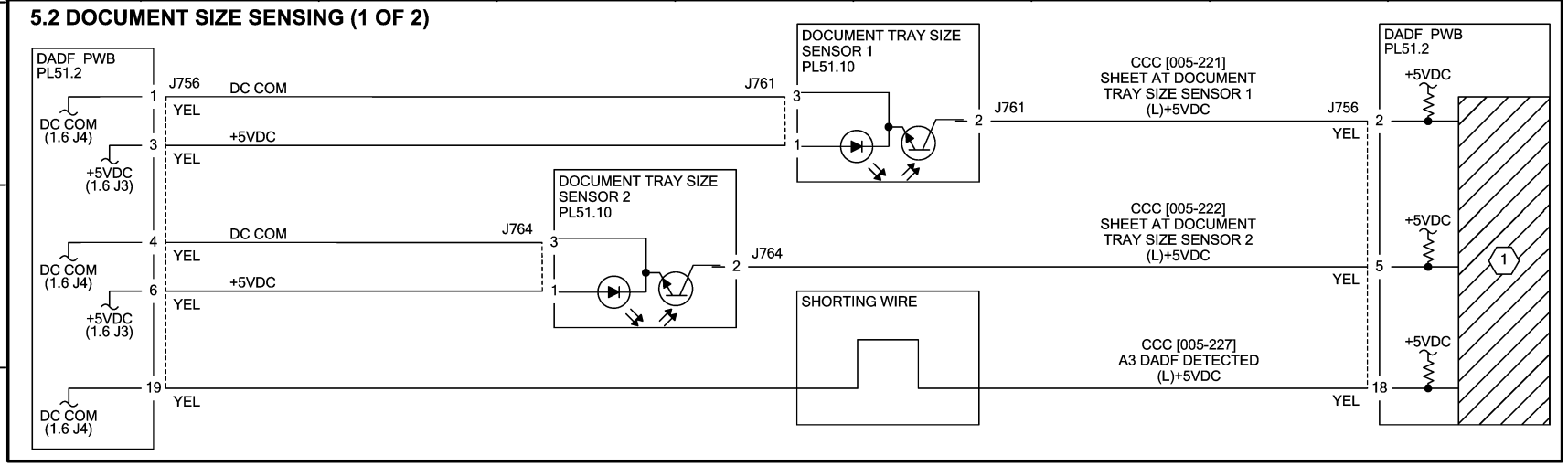

ELECTRICAL COMPONENTS

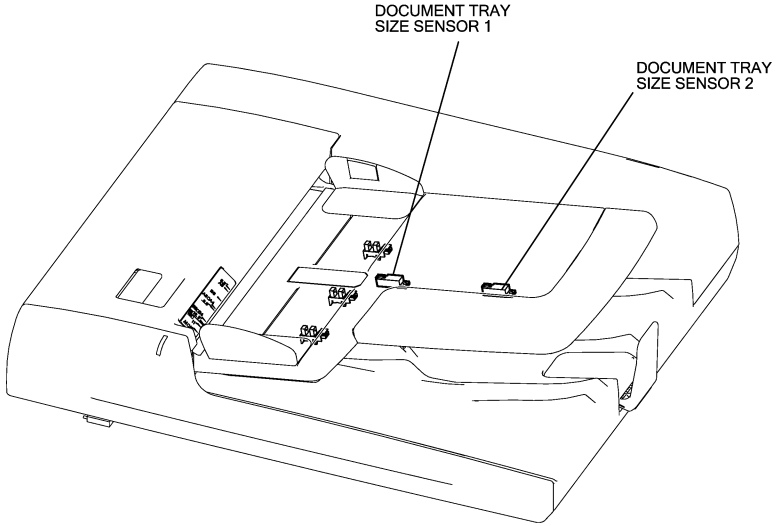

NOTE:
(1) THE RELATION BETWEEN DOC SIZE AND OUTPUT FROM EACH SENSOR IS AS FOLLOWS:

DOC. SIZE	SET GUIDE SENSOR 1	SET GUIDE SENSOR 2	SET GUIDE SENSOR 3	APS SENSOR 1	TRAY SIZE SENSOR 1	TRAY SIZE SENSOR 2
A5S/5.5"X8.5"S	OFF	OFF	ON	-	ON	OFF
B5S	OFF	OFF	OFF	ON	ON	OFF
16KS/8X10S/8X10.5S	OFF	OFF	OFF	OFF	ON	OFF
A5L	OFF	ON	OFF	-	OFF	OFF
A4S	OFF	ON	OFF	-	ON	OFF
5.5"X8.5"L	OFF	ON	ON	-	OFF	OFF
8.5"X11"S	OFF	ON	ON	-	ON	OFF
8.5"X12.4"S/8.5"X13"S/8.5"X14"S	OFF	ON	ON	-	ON	ON
B5L	ON	OFF	ON	-	OFF	OFF
8"X10"L	ON	OFF	ON	-	ON	OFF
B4S	ON	OFF	ON	-	ON	ON
16KL	ON	OFF	OFF	-	OFF	OFF
8"X10.5"L	ON	OFF	OFF	-	ON	OFF
8KS	ON	OFF	OFF	-	ON	ON
8.5"X11"L	ON	ON	OFF	-	ON	OFF
11"X14.9"S/11"X17"S	ON	ON	OFF	-	ON	ON
A4L	ON	ON	ON	-	ON	OFF
A3S	ON	ON	ON	-	ON	ON

Figure 2 BSD 5.2 - Document Size Sensing (1 of 2)

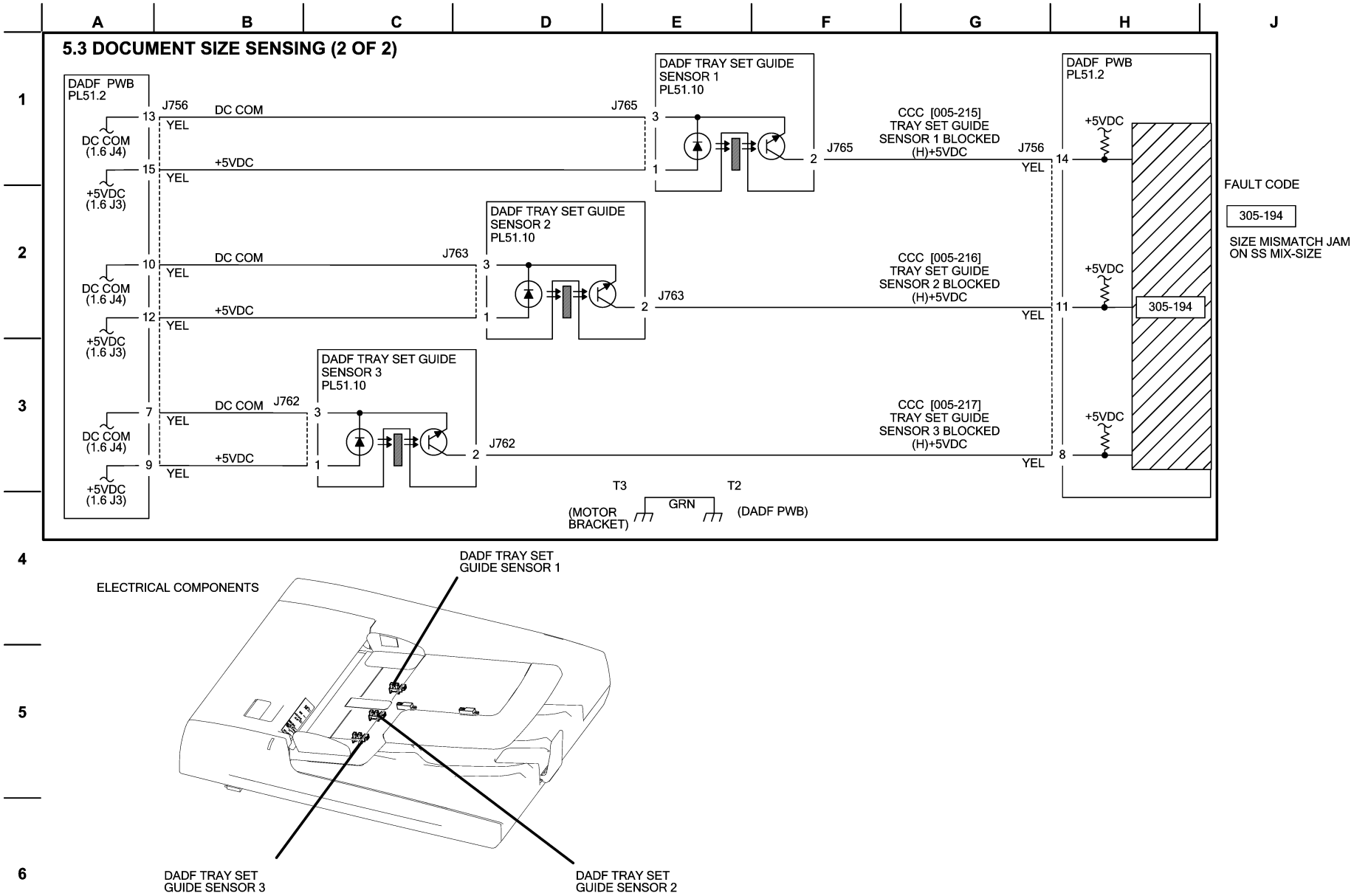

Figure 3 BSD 5.3 - Document Size Sensing (2 of 2)

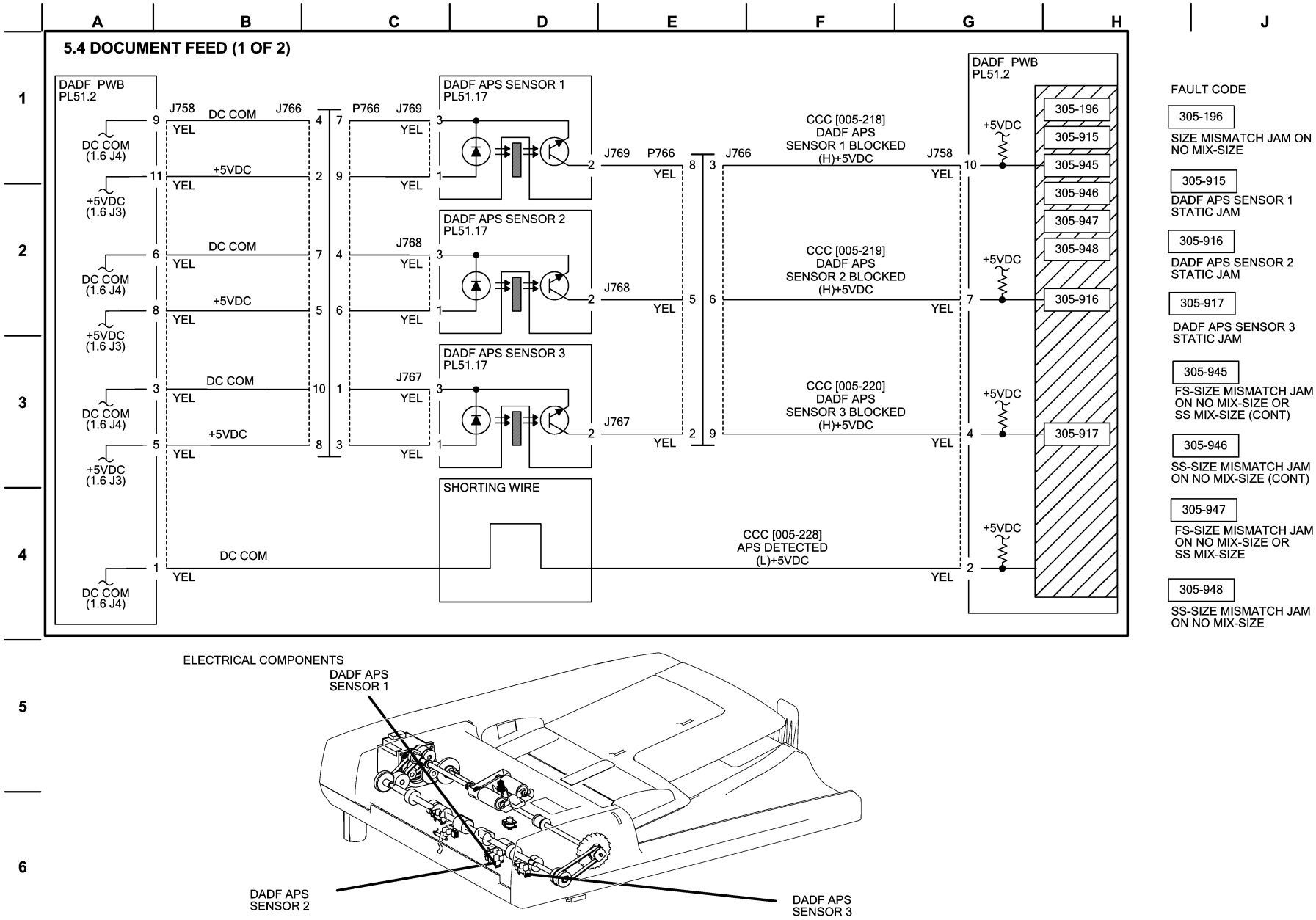

Figure 4 BSD 5.4 - Document Feed (1 of 2)

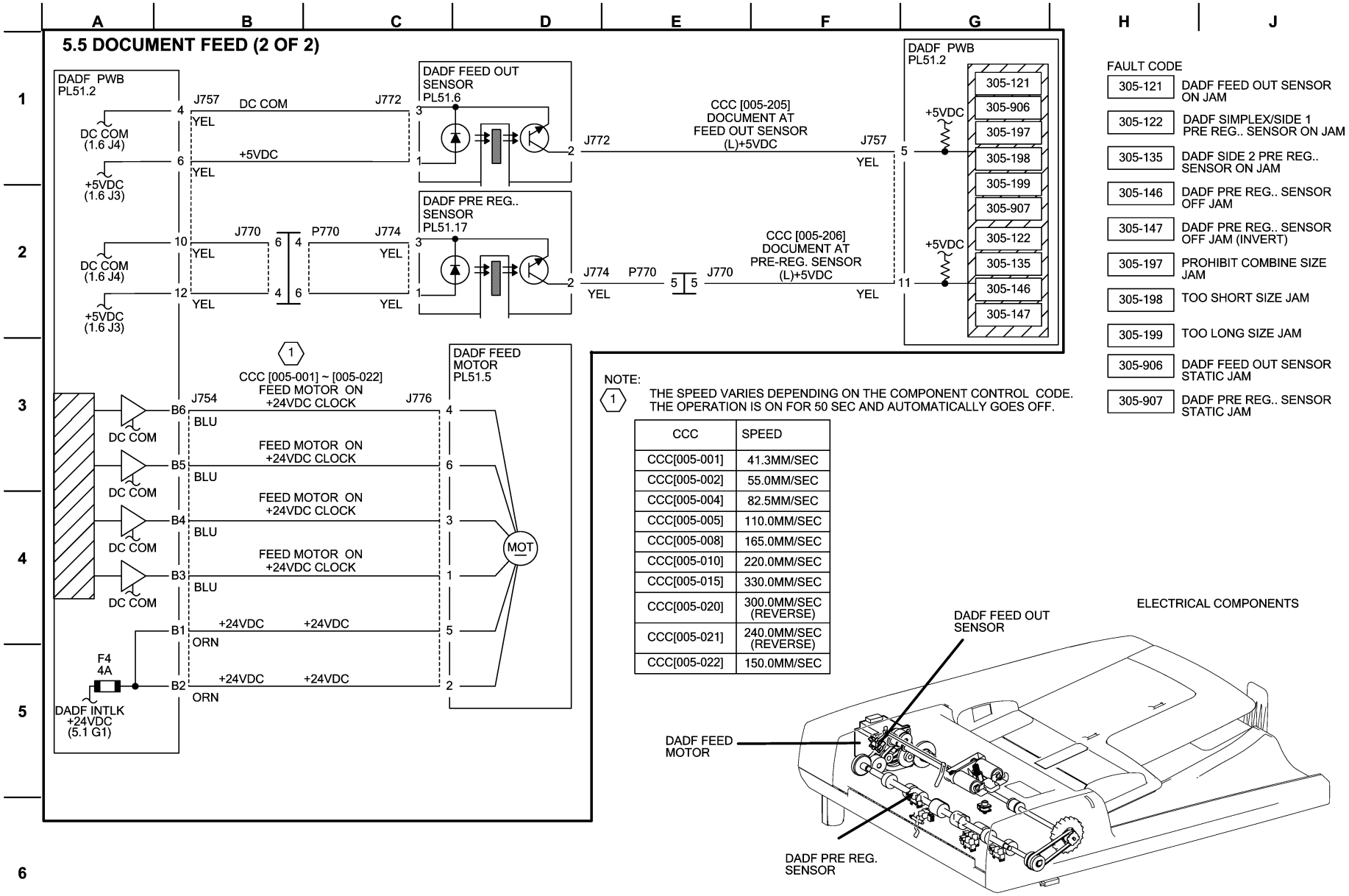

CCC	SPEED
CCC[005-001]	41.3MM/SEC
CCC[005-002]	55.0MM/SEC
CCC[005-004]	82.5MM/SEC
CCC[005-005]	110.0MM/SEC
CCC[005-008]	165.0MM/SEC
CCC[005-010]	220.0MM/SEC
CCC[005-015]	330.0MM/SEC
CCC[005-020]	300.0MM/SEC (REVERSE)
CCC[005-021]	240.0MM/SEC (REVERSE)
CCC[005-022]	150.0MM/SEC

Figure 5 BSD 5.5 - Document Feed (2 of 2)

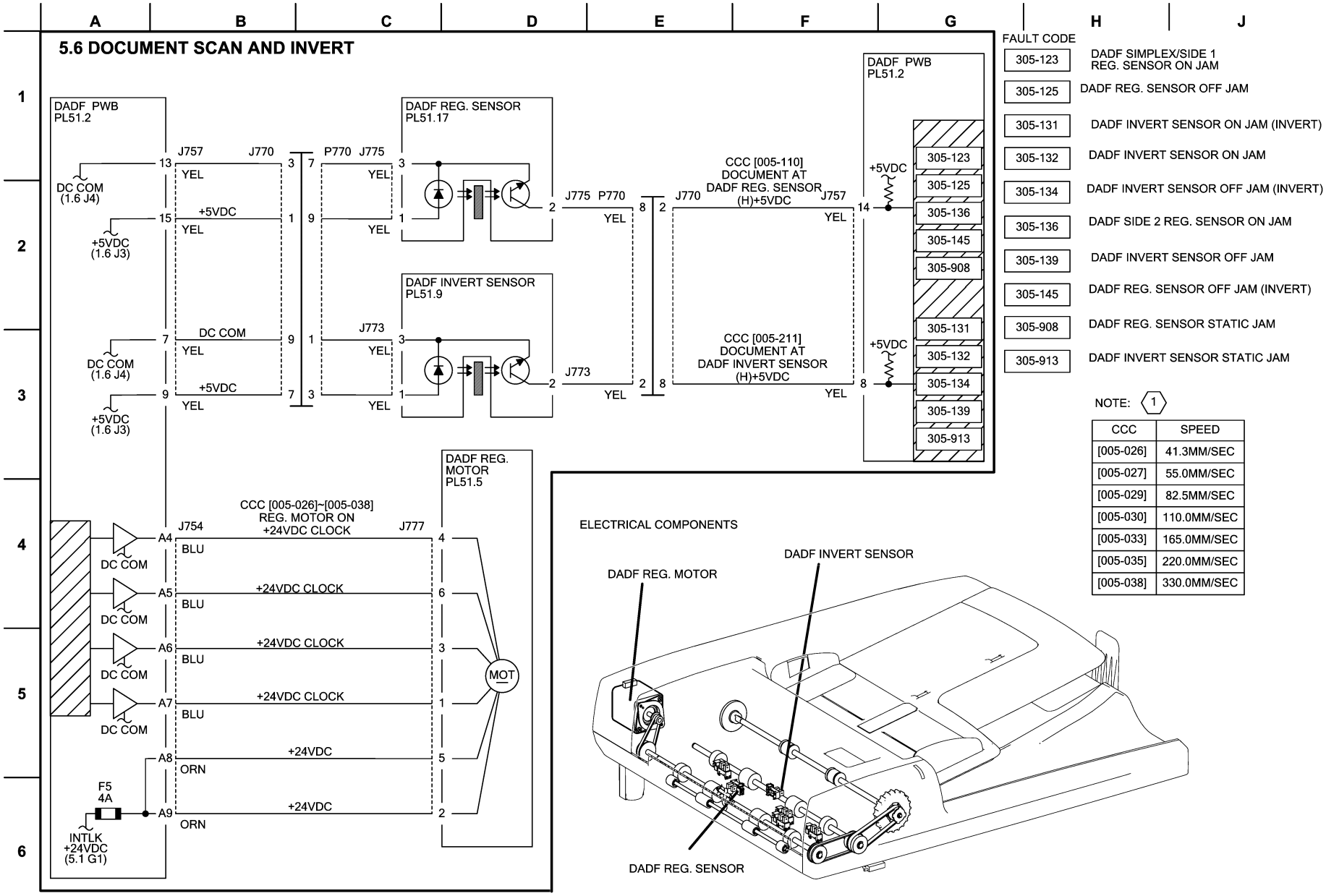

Figure 6 BSD 5.6 - Document Scan and Invert

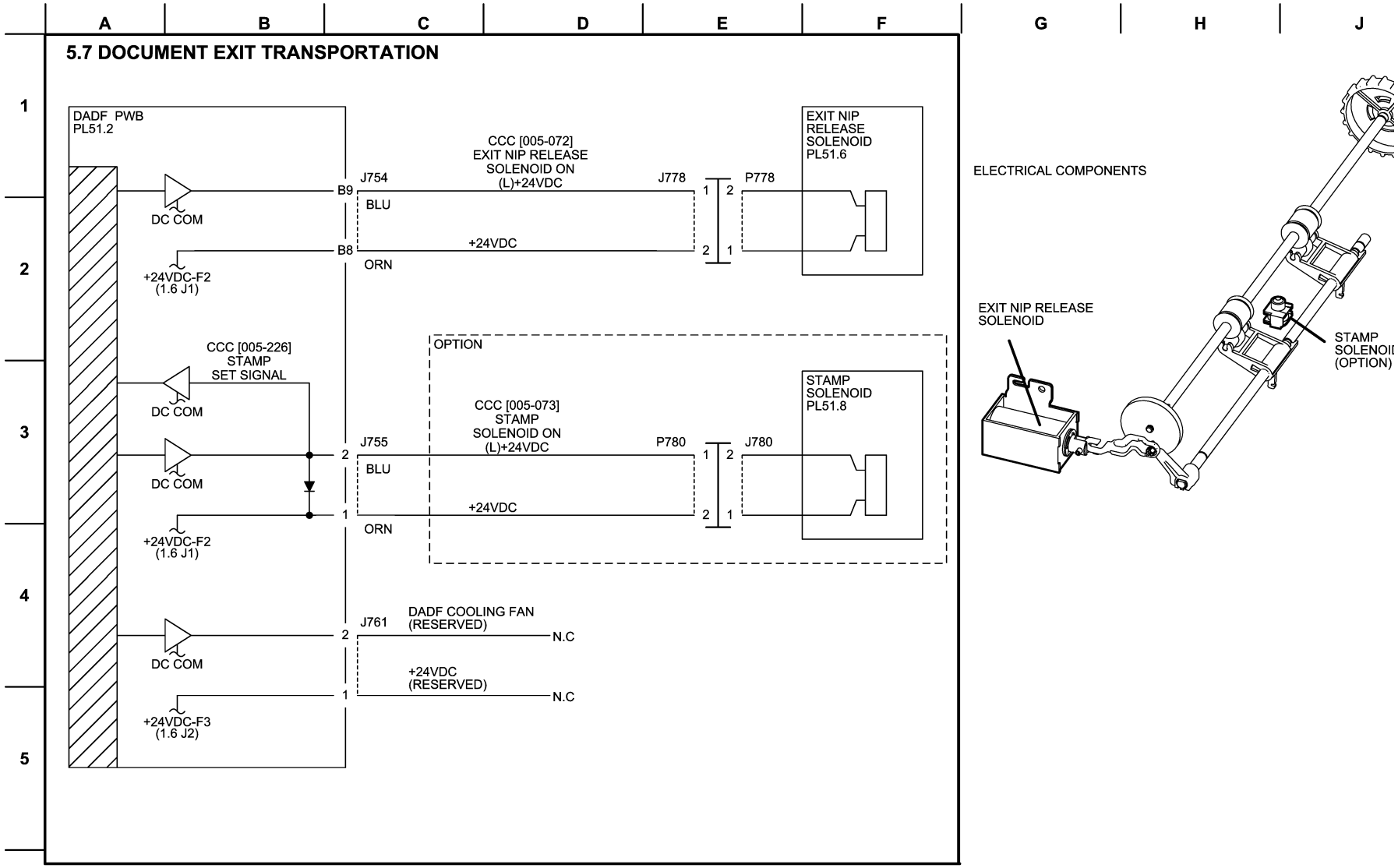

Figure 7 BSD 5.7 - Document Exit Transportation

5.8 DOCUMENT PATH

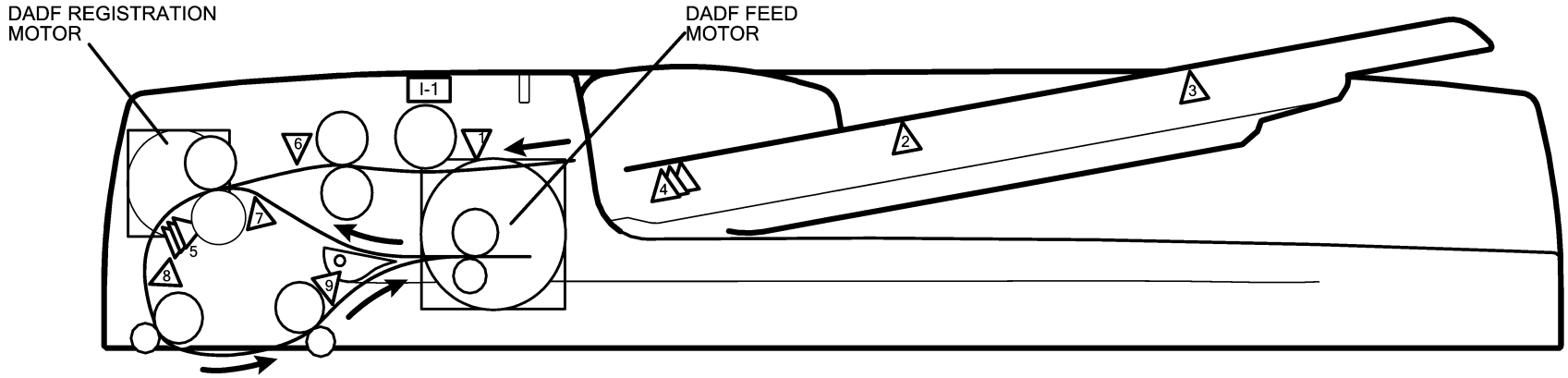

PAPER PATH SENSOR

NO.	SENSOR NAME	BSD
1	DADF DOCUMENT SET SENSOR	5.1
2	DOCUMENT TRAY SIZE SENSOR 1	5.2
3	DOCUMENT TRAY SIZE SENSOR 2	5.2
4	DADF TRAY SET GUIDE SENSOR 1～3	5.3
5	DADF APS SENSOR 1～3	5.4
6	DADF FEED OUT SENSOR	5.5
7	DADF PRE REG.. SENSOR	5.5
8	DADF REG.. SENSOR	5.6
9	DADF INVERT SENSOR	5.6

INTERLOCK SWITCH

NO.	SWITCH NAME	BSD
I-1	DADF INTERLOCK SWITCH	5.1

Figure 8 BSD 5.8 - Document Path

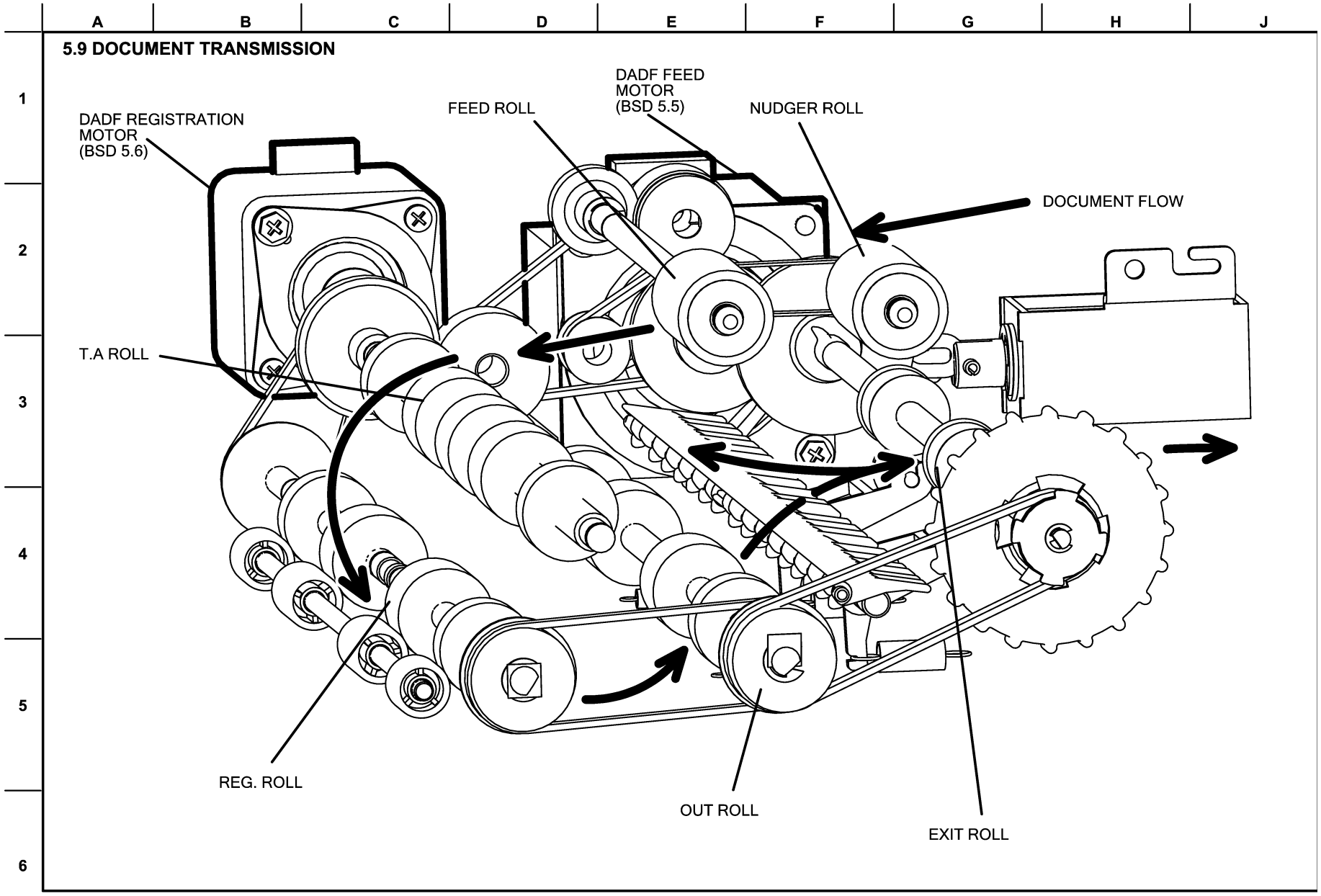

Figure 9 BSD 5.9 - Document Transmission

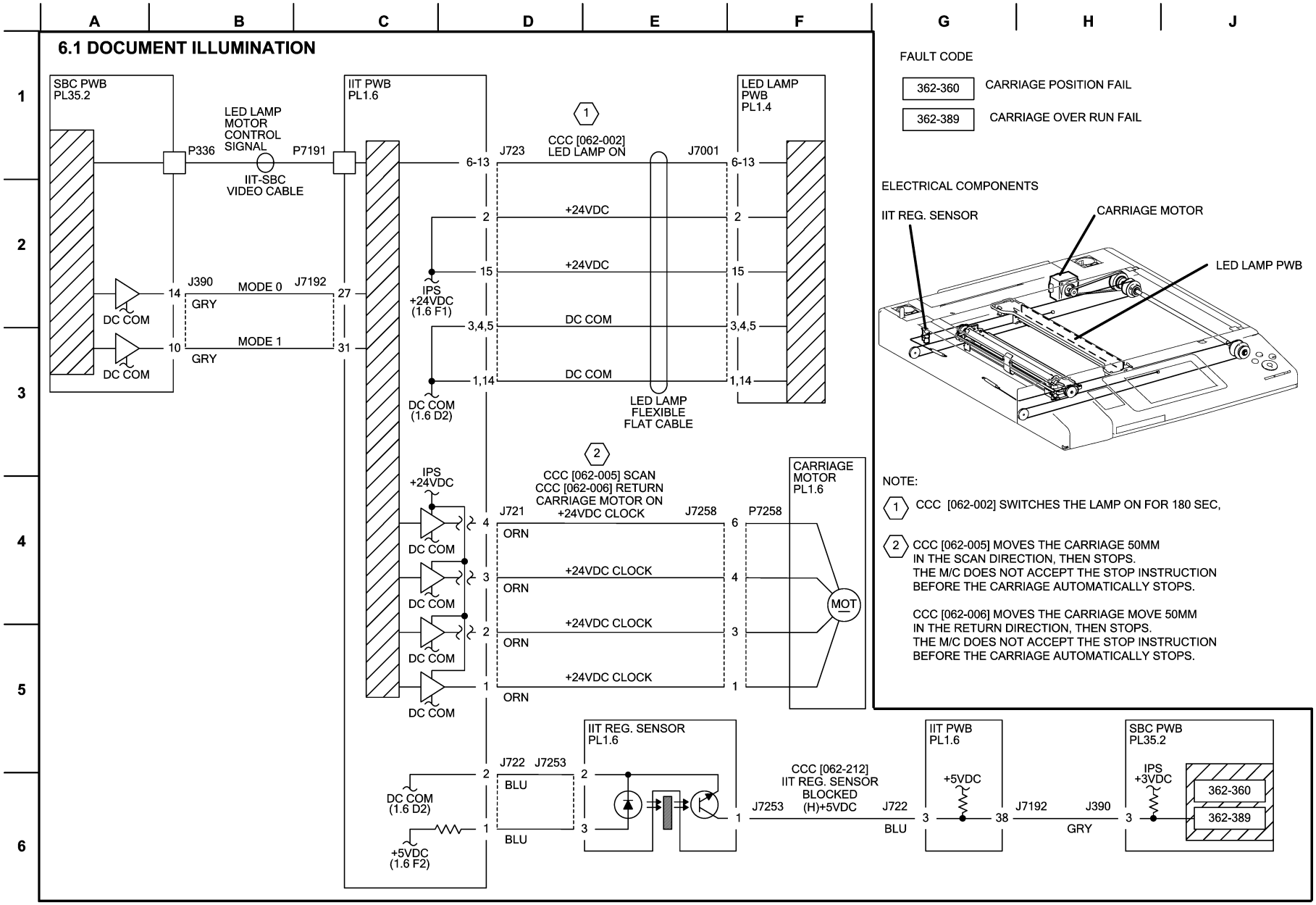

Figure 1 BSD 6.1 - Document Illumination

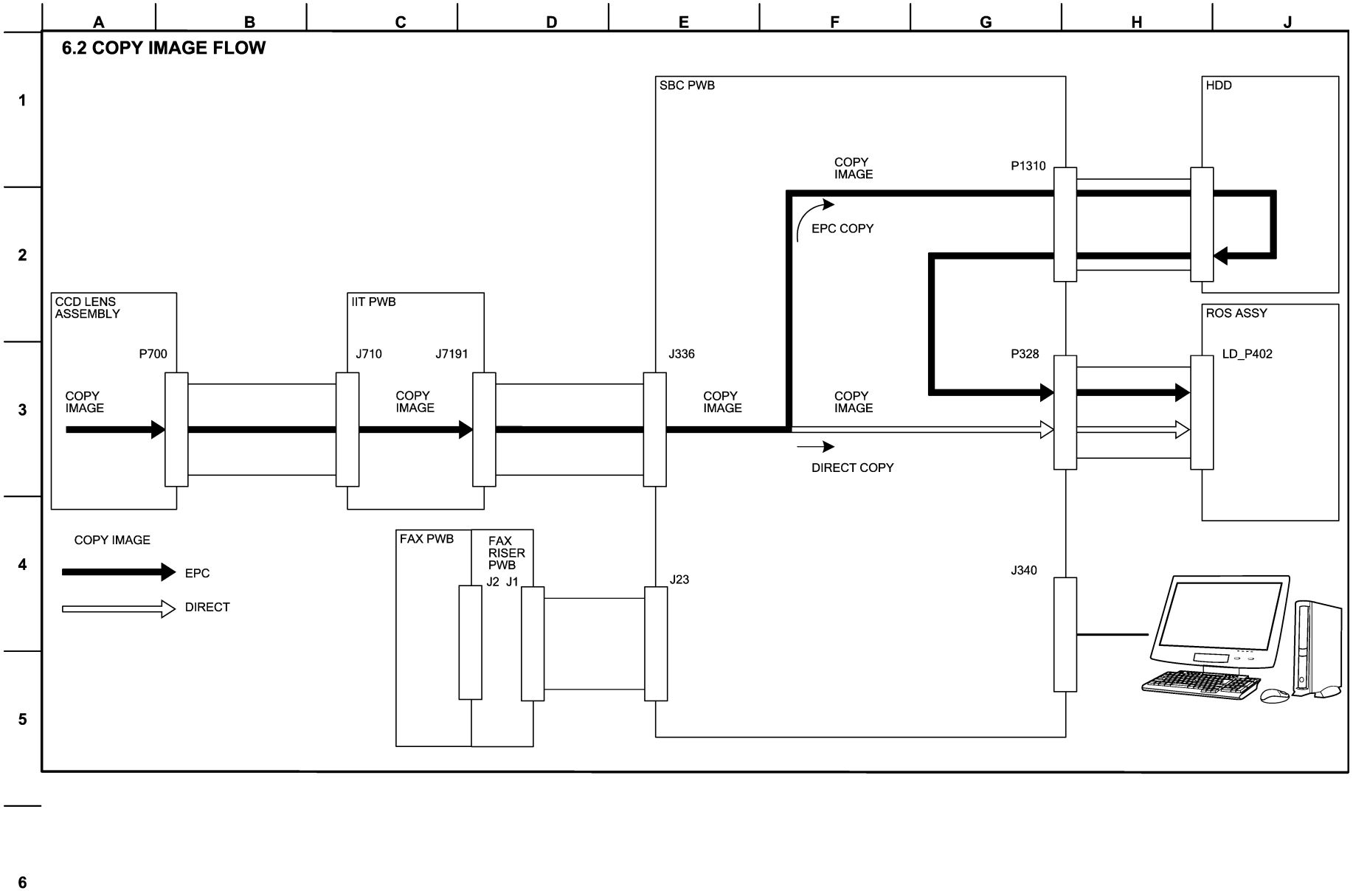

Figure 2 BSD 6.2 - Copy Image Flow

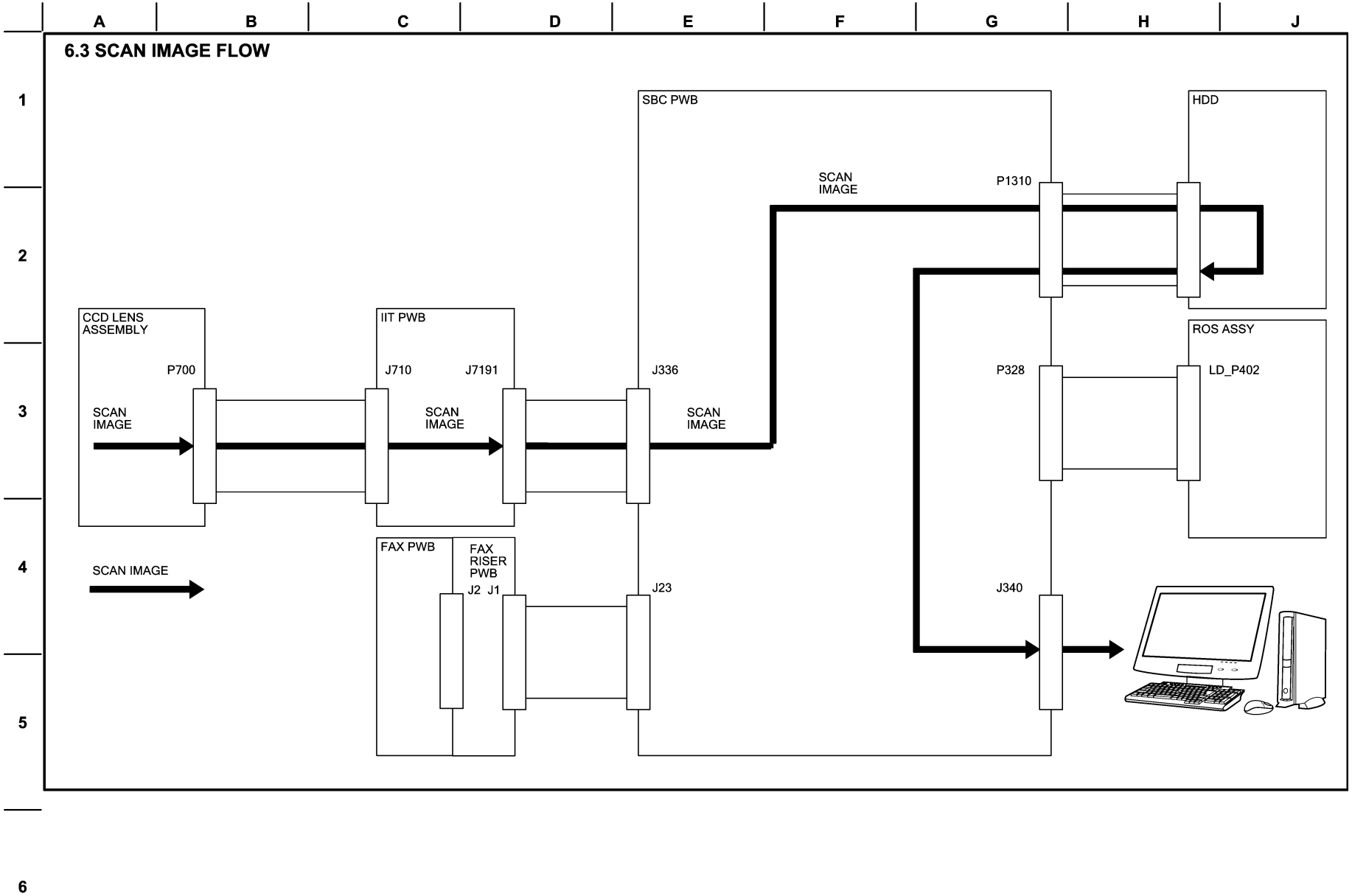

Figure 3 BSD 6.3 - Scan Image Flow

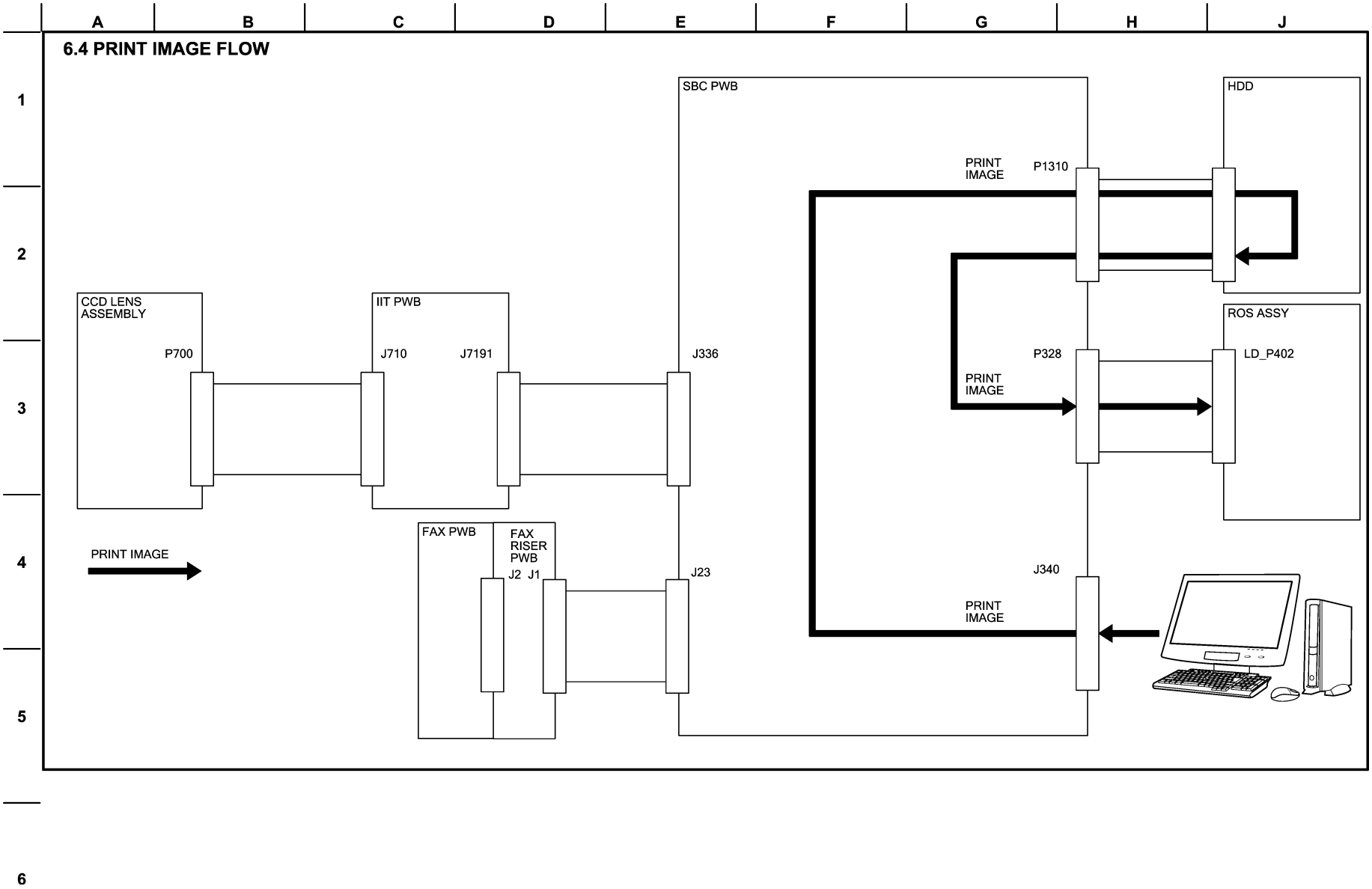

Figure 4 BSD 6.4 - Print Image Flow

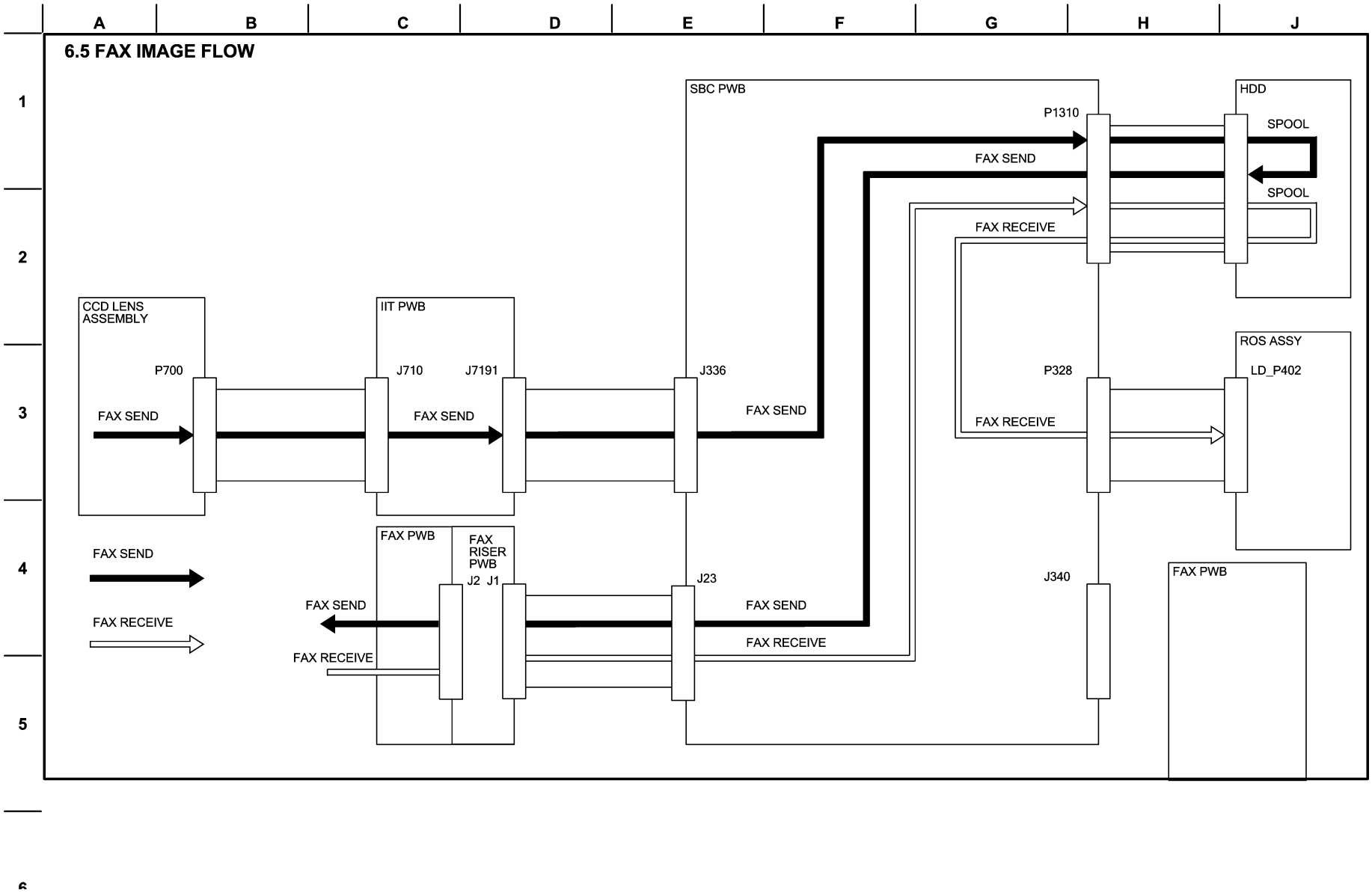

Figure 5 BSD 6.5 - FAX Image Flow

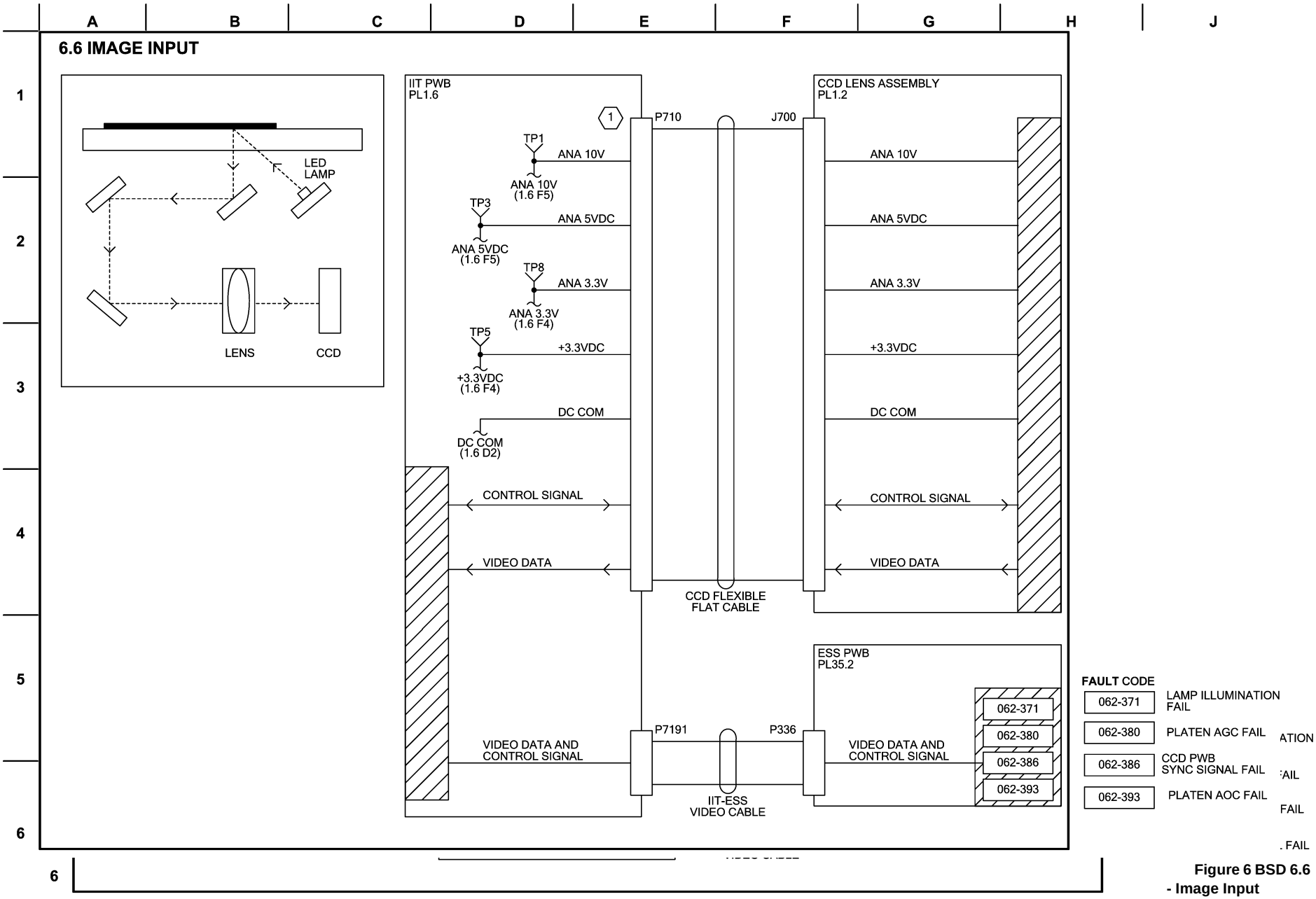

Figure 6 BSD 6.6 - Image Input

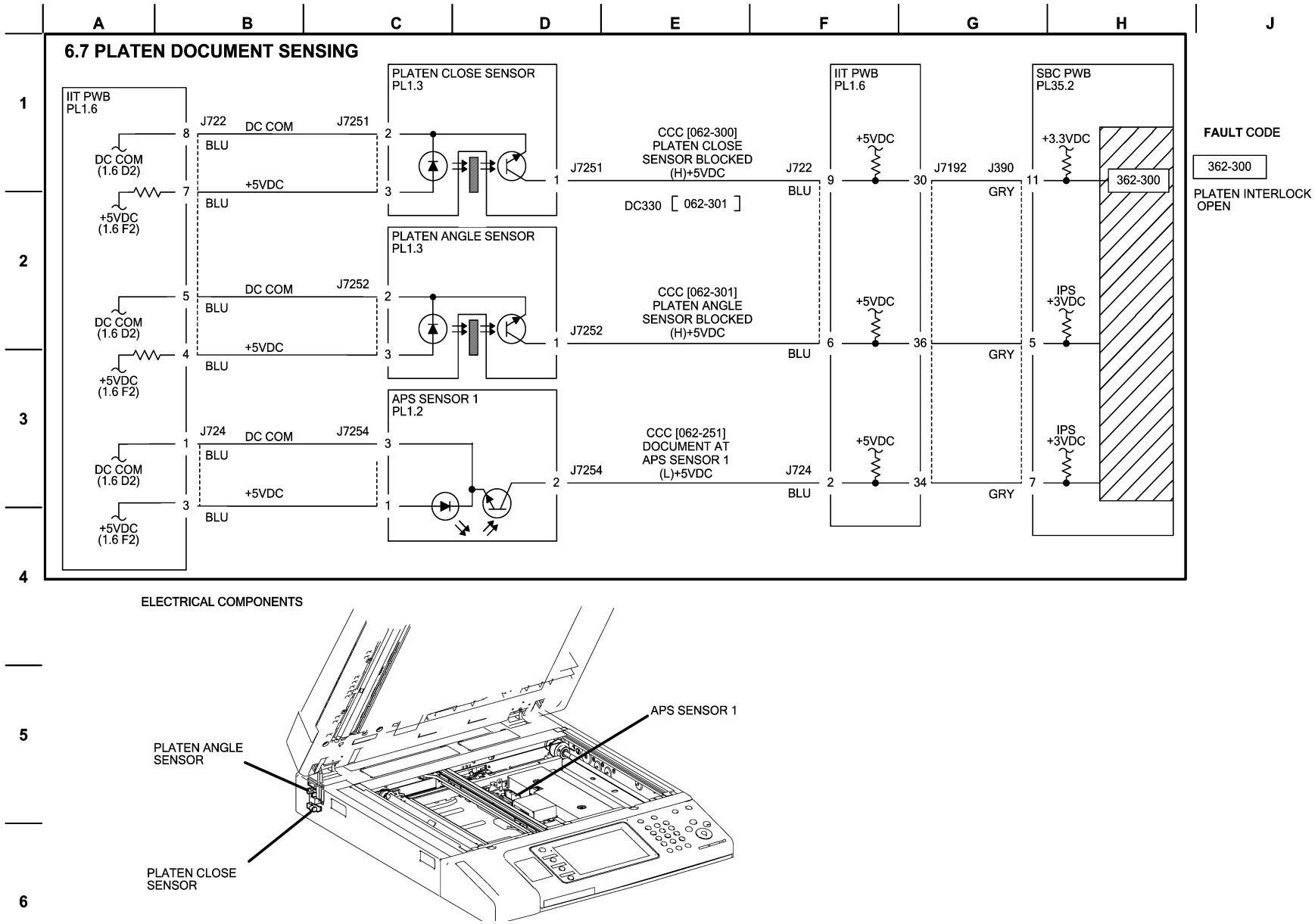

Figure 7 BSD 6.7 - Platen Document Sensing

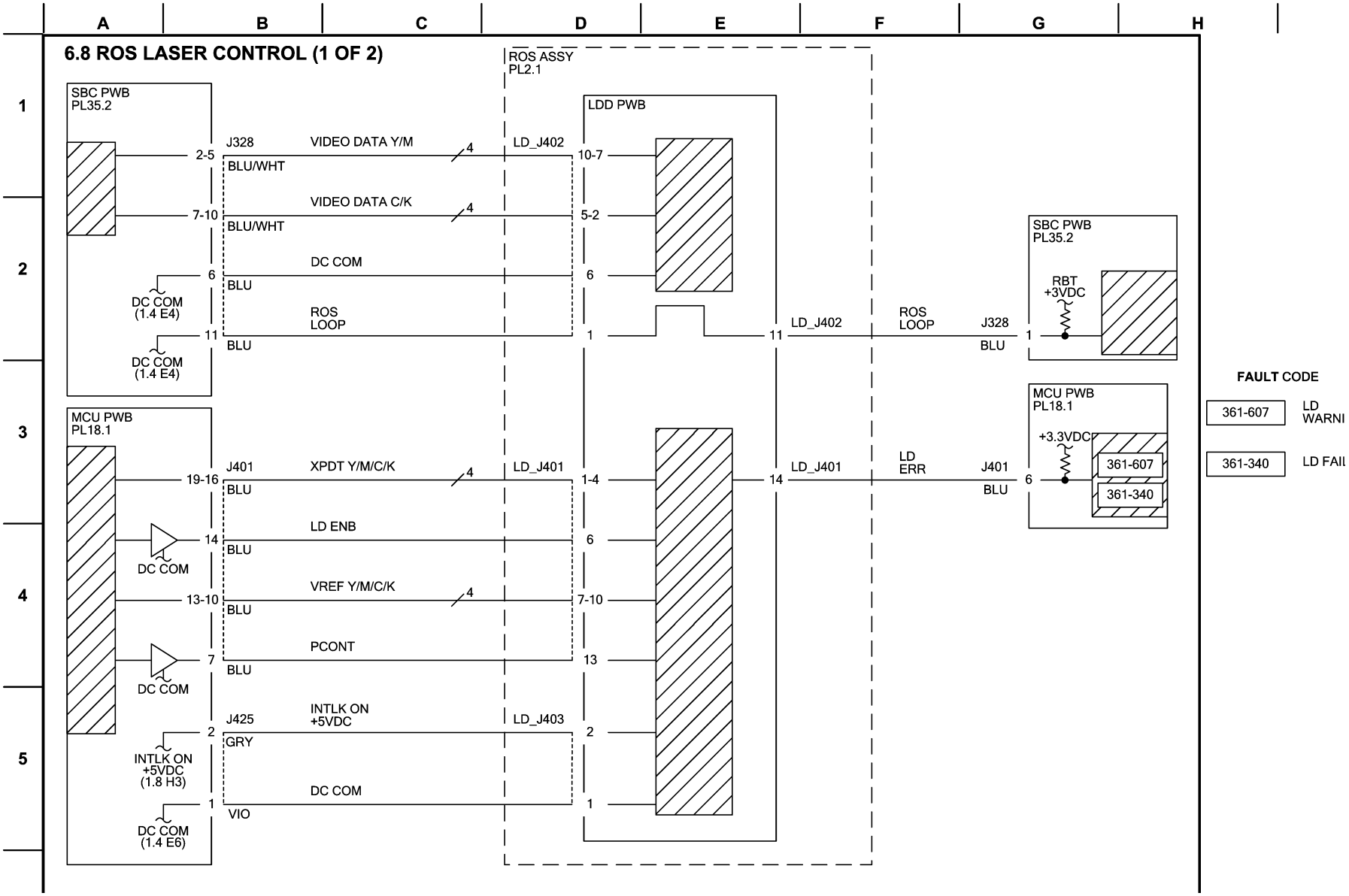

Figure 8 BSD 6.8 - ROS Laser Control (1 of 2)

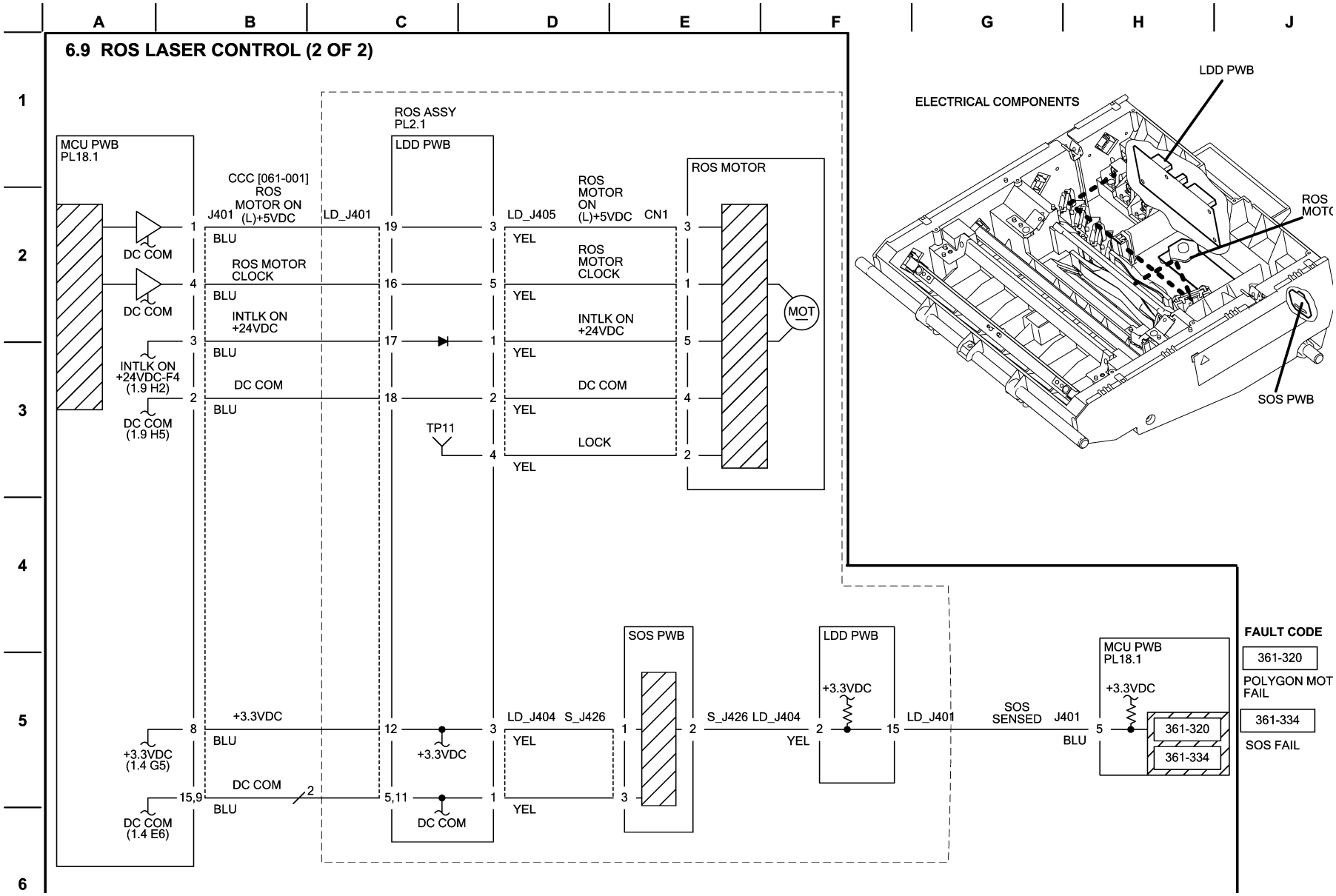

Figure 9 BSD 6.9 - ROS Laser Control (2 of 2)

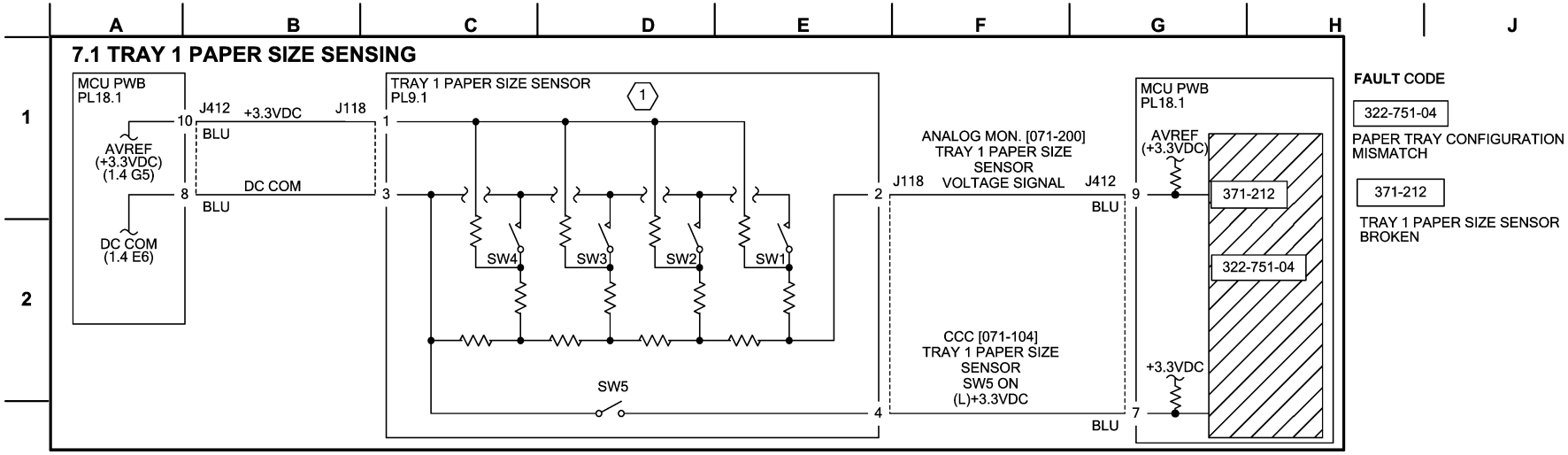

NOTE: (1) PAPER SIZE IS DETERMINED BY VOLTAGE CORRESPONDING TO COMBINED RESISTANCE OF PAPER SIZE SENSOR SW1~SW4, AND SW5 ON/OFF. (ANY COMBINATION OTHER THAN THE ONES BELOW RESULTS IN AN UNDETERMINED SIZE.)

PAPER SIZE	SW1	SW2	SW3	SW4	SW5	VOLTAGE (J412-9)	A/D VALUE [071-200]
NO TRAY	OFF	OFF	OFF	OFF	OFF	3.085±0.066	922-989
A5S/5.5"X8.5"S (*1)	OFF	OFF	ON	OFF	OFF	2.671±0.066	797-857
B5S	OFF	OFF	ON	ON	ON	2.468±0.066	735-796
8.5"X13"S	OFF	ON	OFF	ON	OFF	2.064±0.066	610-671
8.5"X14"S	OFF	ON	OFF	ON	ON		
A4S	OFF	ON	ON	OFF	OFF	1.864±0.066	548-609
8.5"X11"S	OFF	ON	ON	OFF	ON		
A4L	ON	OFF	ON	OFF	OFF	1.079±0.066	304-365
A3S	ON	OFF	ON	ON	OFF	0.881±0.066	244-303
B5L/7.25"X10.5"L(*1)	ON	ON	OFF	OFF	ON	0.691±0.066	184-243
8KS(*2)	ON	ON	OFF	ON	OFF	0.493±0.066	124-183
B4S	ON	ON	OFF	ON	ON		
8.5"X11"L	ON	ON	ON	OFF	OFF	0.300±0.066	64-123
16KL(*2)/7.25"X10.5"L(*1)	ON	ON	ON	OFF	ON		
11"X17"S	ON	ON	ON	ON	ON	0.106±0.066	0-63

*1 : PAPER SIZE IS CHANGED IN DIAG.
*2 : SYSTEM SETTING ENABLES SWITCHING BETWEEN GCO AND TFX SIZES.

ELECTRICAL COMPONENTS

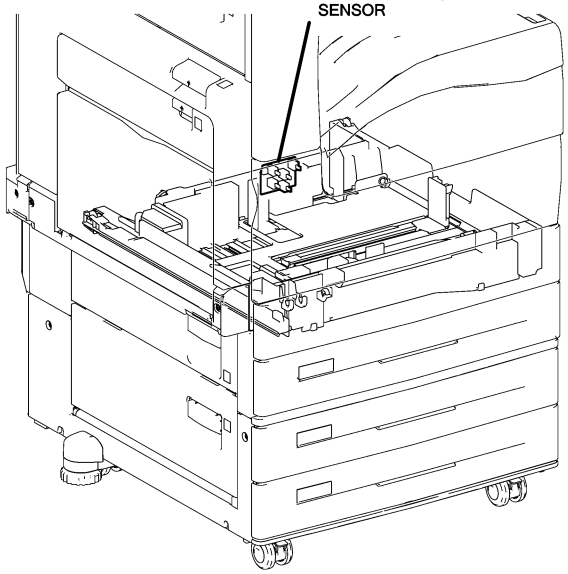

Figure 1 BSD 7.1 - Tray 1 Paper Size Sensing

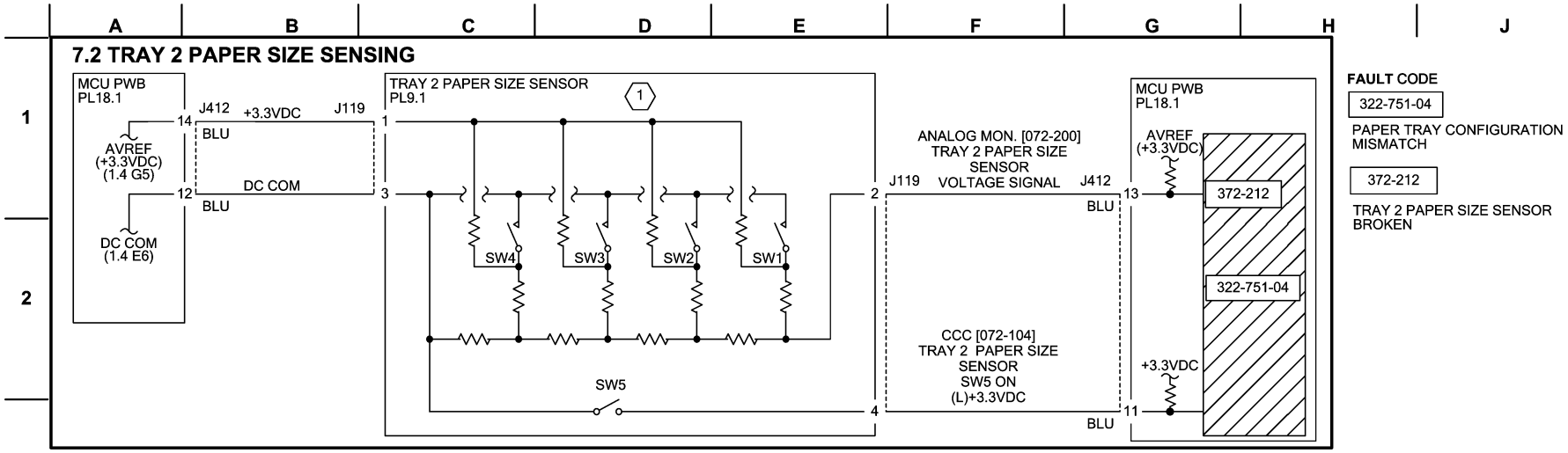

NOTE: (1) PAPER SIZE IS DETERMINED BY VOLTAGE CORRESPONDING TO COMBINED RESISTANCE OF PAPER SIZE SENSOR SW1~SW4, AND SW5 ON/OFF. (ANY COMBINATION OTHER THAN THE ONES BELOW RESULTS IN AN UNDETERMINED SIZE.)

PAPER SIZE	SW1	SW2	SW3	SW4	SW5	VOLTAGE (J412-13)	A/D VALUE [072-200]
NO TRAY	OFF	OFF	OFF	OFF	OFF	3.085±0.066	922-989
A5S/5.5"X8.5"S (*1)	OFF	OFF	ON	OFF	OFF	2.671±0.066	797-857
B5S	OFF	OFF	ON	ON	ON	2.468±0.066	735-796
8.5"X13"S	OFF	ON	OFF	ON	OFF	2.064±0.066	610-671
8.5"X14"S	OFF	ON	OFF	ON	ON		
A4S	OFF	ON	ON	OFF	OFF	1.864±0.066	548-609
8.5"X11"S	OFF	ON	ON	OFF	ON		
A4L	ON	OFF	ON	OFF	OFF	1.079±0.066	304-365
A3S	ON	OFF	ON	ON	OFF	0.881±0.066	244-303
B5L/7.25"X10.5"L(*1)	ON	ON	OFF	OFF	ON	0.691±0.066	184-243
8KS(*2)	ON	ON	OFF	ON	OFF	0.493±0.066	124-183
B4S	ON	ON	OFF	ON	ON		
8.5"X11"L	ON	ON	ON	OFF	OFF	0.300±0.066	64-123
16KL(*2)/7.25"X10.5"L(*1)	ON	ON	ON	OFF	ON		
11"X17"S	ON	ON	ON	ON	ON	0.106±0.066	0-63

*1 : PAPER SIZE IS CHANGED IN DIAG.
*2 : SYSTEM SETTING ENABLES SWITCHING BETWEEN GCO AND TFX SIZES.

ELECTRICAL COMPONENTS

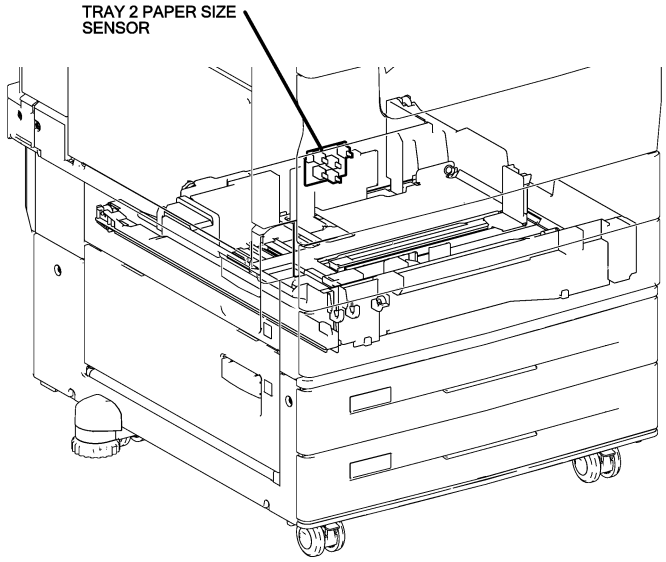

Figure 2 BSD 7.2 - Tray 2 Paper Size Sensing

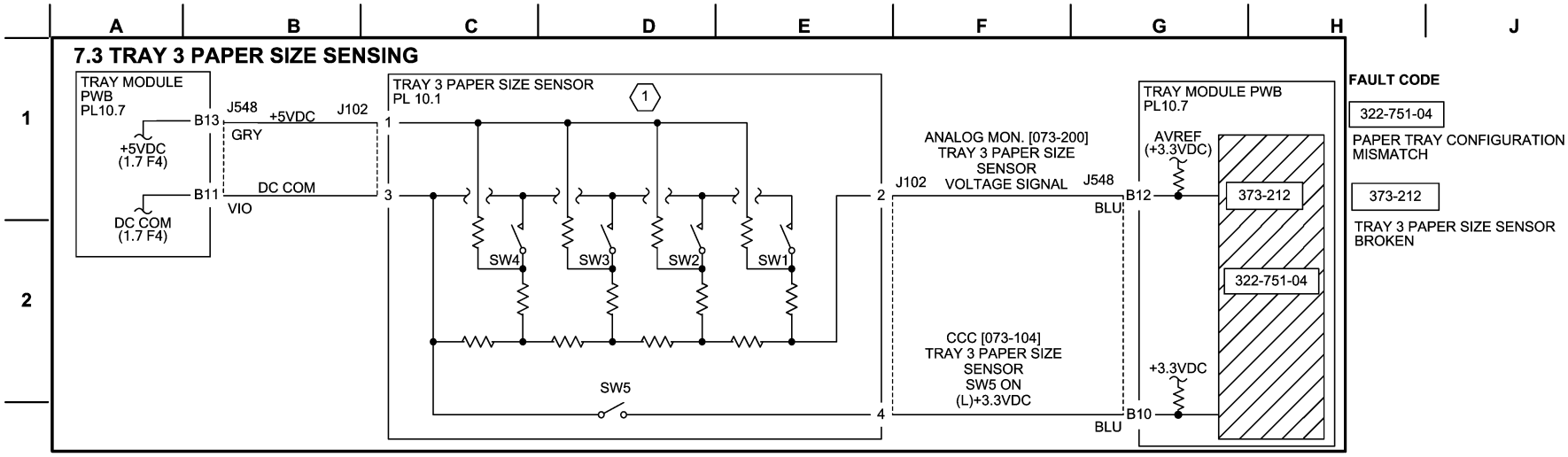

NOTE: (1) PAPER SIZE IS DETERMINED BY VOLTAGE CORRESPONDING TO COMBINED RESISTANCE OF PAPER SIZE SENSOR SW1~SW4, AND SW5 ON/OFF. (ANY COMBINATION OTHER THAN THE ONES BELOW RESULTS IN AN UNDETERMINED SIZE.)

PAPER SIZE	SW1	SW2	SW3	SW4	SW5	VOLTAGE (J548-B12)	A/D VALUE [073-200]
NO TRAY	OFF	OFF	OFF	OFF	OFF	4.66±0.03	237-247
A5S/5.5"X8.5"S (*1)	OFF	OFF	ON	OFF	OFF	4.01±0.03	199-214
B5S	OFF	OFF	ON	ON	ON	3.69±0.03	184-198
8.5"X13"S	OFF	ON	OFF	ON	OFF	3.07±0.03	153-167
8.5"X14"S	OFF	ON	OFF	ON	ON		
A4S	OFF	ON	ON	OFF	OFF	2.75±0.03	137-152
8.5"X11"S	OFF	ON	ON	OFF	ON		
8"X10"S	OFF	ON	ON	ON	ON	2.44±0.03	122-136
12.6"X19.2"S/13"X19"S(*1)	ON	OFF	OFF	OFF	ON	2.15±0.03	107-121
A4L	ON	OFF	ON	OFF	OFF	1.52±0.03	77-91
A3S	ON	OFF	ON	ON	OFF	1.21±0.03	61-76
B5L/7.25"X10.5"L(*1)	ON	ON	OFF	OFF	ON	0.91±0.03	46-60
8KS(*2)	ON	ON	OFF	ON	OFF	0.60±0.03	31-45
B4S	ON	ON	OFF	ON	ON		
8.5"X11"L	ON	ON	ON	OFF	OFF	0.30±0.03	16-30
16KL(*2)/7.25"X10.5"L(*1)	ON	ON	ON	OFF	ON		
11"X17"S	ON	ON	ON	ON	ON	0.00±0.03	0-15

*1 : PAPER SIZE IS CHANGED IN DIAG.
*2 : SYSTEM SETTING ENABLES SWITCHING BETWEEN GCO AND TFX SIZES.

ELECTRICAL COMPONENTS

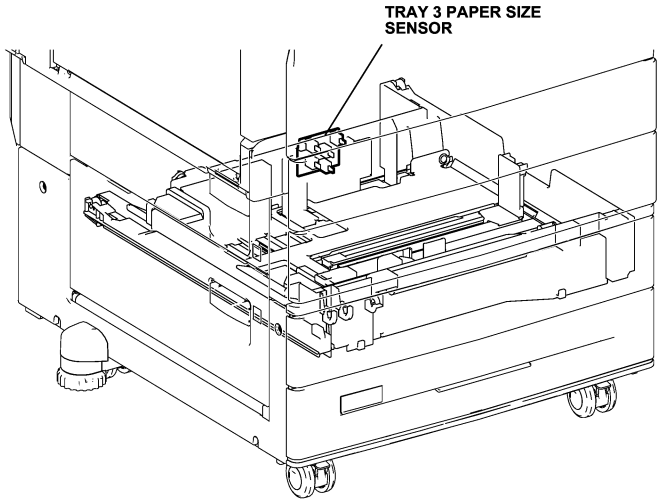

Figure 3 BSD 7-3 - Tray 3 Paper Size Sensing

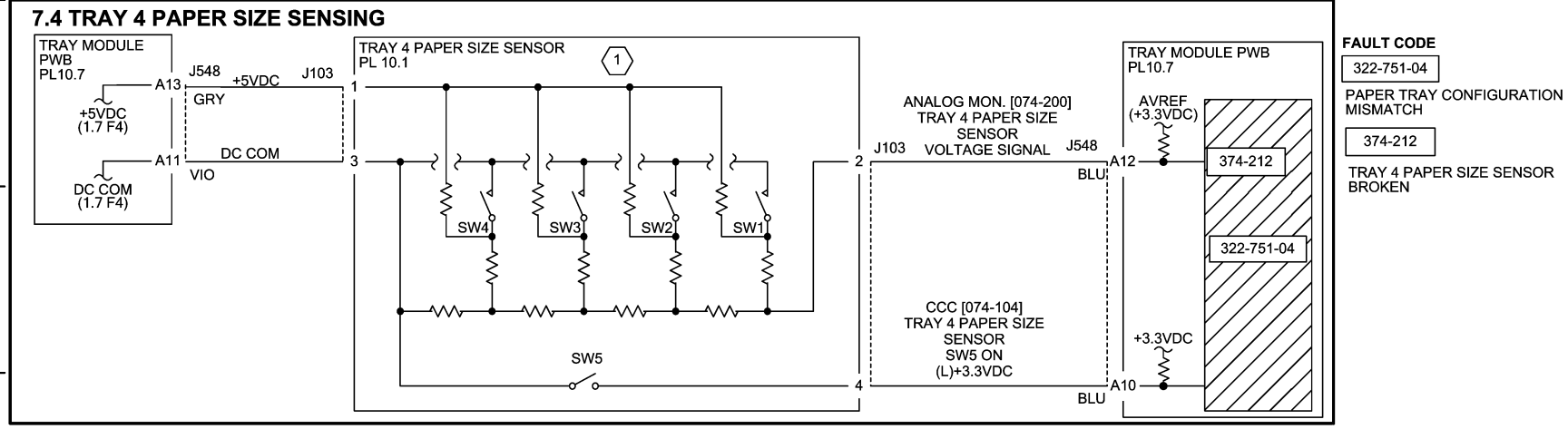

NOTE: (1) PAPER SIZE IS DETERMINED BY VOLTAGE CORRESPONDING TO COMBINED RESISTANCE OF PAPER SIZE SENSOR SW1~SW4, AND SW5 ON/OFF. (ANY COMBINATION OTHER THAN THE ONES BELOW RESULTS IN AN UNDETERMINED SIZE.)

PAPER SIZE	SW1	SW2	SW3	SW4	SW5	VOLTAGE (J548-A12)	A/D VALUE [074-200]
NO TRAY	OFF	OFF	OFF	OFF	OFF	4.66±0.03	237-247
A5S/5.5"X8.5"S (*1)	OFF	OFF	ON	OFF	OFF	4.01±0.03	199-214
B5S	OFF	OFF	ON	ON	ON	3.69±0.03	184-198
8.5"X13"S	OFF	ON	OFF	ON	OFF	3.07±0.03	153-167
8.5"X14"S	OFF	ON	OFF	ON	ON		
A4S	OFF	ON	ON	OFF	OFF	2.75±0.03	137-152
8.5"X11"S	OFF	ON	ON	OFF	ON		
8"X10"S	OFF	ON	ON	ON	ON	2.44±0.03	122-136
12.6"X19.2"S/13"X19"S(*1)	ON	OFF	OFF	OFF	ON	2.15±0.03	107-121
A4L	ON	OFF	ON	OFF	OFF	1.52±0.03	77-91
A3S	ON	OFF	ON	ON	OFF	1.21±0.03	61-76
B5L/7.25"X10.5"L(*1)	ON	ON	OFF	OFF	ON	0.91±0.03	46-60
8KS(*2)	ON	ON	OFF	ON	OFF	0.60±0.03	31-45
B4S	ON	ON	OFF	ON	ON		
8.5"X11"L	ON	ON	ON	OFF	OFF	0.30±0.03	16-30
16KL(*2)/7.25"X10.5"L(*1)	ON	ON	ON	OFF	ON		
11"X17"S	ON	ON	ON	ON	ON	0.00±0.03	0-15

*1 : PAPER SIZE IS CHANGED IN DIAG.
*2 : SYSTEM SETTING ENABLES SWITCHING BETWEEN GCO AND TFX SIZES.

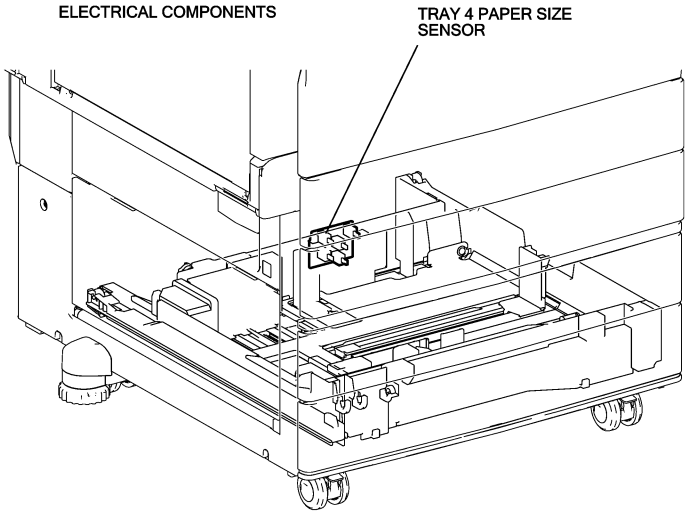

Figure 4 BSD 7.4 - Tray 4 Paper Size Sensing

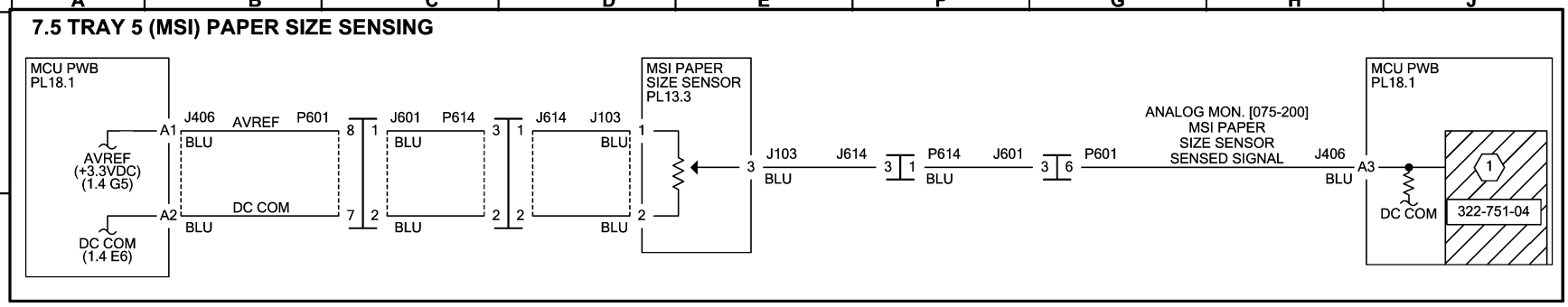

NOTE: (1) PAPER WIDTH IS DETERMINED BY VOLTAGE CORRESPONDING TO MSI PAPER SIZE SENSOR RESISTANCE.
ANALOG VALUES CORRESPONDING TO PAPER SIZES (WIDTHS) VARY DEPENDING ON THE MACHINE.
THE VALUES BELOW ARE FOR REFERENCE.

PAPER SIZE	VOLTAGE (J525-B1)	A/D VALUE [075-200]
5.5"X8.5"S	2.246-2.302	691.590-718.233
A5S	2.156-2.212	663.708-690.350
B5S	1.788-1.843	549.488-576.131
8"X10"S	1.636-1.692	502.457-529.099
8.5"X11"S(LETTER)&X13"&X14"	1.503-1.559	461.304-487.947
A4S	1.484-1.540	455.425-482.068
7.25"X10.5"L	0.972-1.028	296.694-323.337
B5L	0.975-1.031	297.534-324.176
B4S		
16KL(TAIWAN)	0.867-0.922	263.940-290.583
8KS(TAIWAN)		
16KL(MAINLAND CHINA)	0.834-0.890	253.862-280.504
8 KL(MAINLAND CHINA)		
11"X17"S	0.732-0.788	222.284-248.926
8.5"X11"L(LETTER)		
A4L	0.541-0.597	163.159-189.801
A3S		

REF. PAPER LENGTH (SIZE IN SLOW SCAN DIRECTION) IS DETERMINED BY TIMING HOW LONG PAPER TAKES TO PASS REG. SENSOR.

ELECTRICAL COMPONENTS

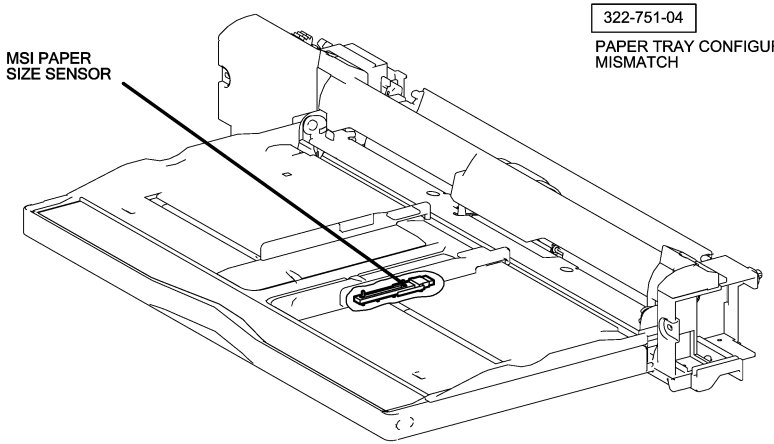

FAULT CODE

322-751-04

PAPER TRAY CONFIGURATION MISMATCH

Figure 5 BSD 7.5 - Tray 5 (MSI) Paper Size Sensing

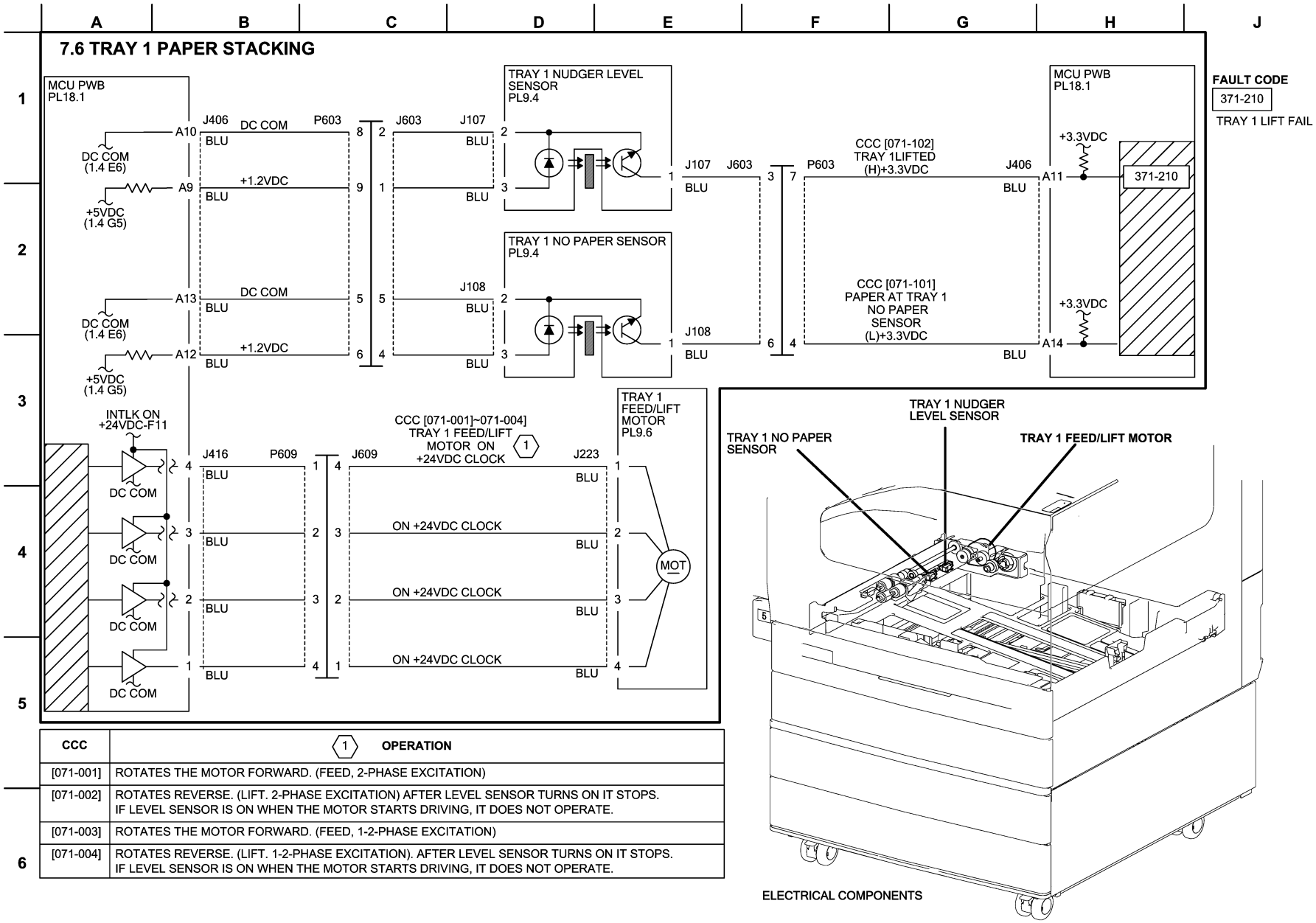

CCC	1 OPERATION
[071-001]	ROTATES THE MOTOR FORWARD. (FEED, 2-PHASE EXCITATION)
[071-002]	ROTATES REVERSE. (LIFT. 2-PHASE EXCITATION) AFTER LEVEL SENSOR TURNS ON IT STOPS. IF LEVEL SENSOR IS ON WHEN THE MOTOR STARTS DRIVING, IT DOES NOT OPERATE.
[071-003]	ROTATES THE MOTOR FORWARD. (FEED, 1-2-PHASE EXCITATION)
[071-004]	ROTATES REVERSE. (LIFT. 1-2-PHASE EXCITATION). AFTER LEVEL SENSOR TURNS ON IT STOPS. IF LEVEL SENSOR IS ON WHEN THE MOTOR STARTS DRIVING, IT DOES NOT OPERATE.

Figure 6 BSD 7.6 - Tray 1 Paper Stacking

7.7 TRAY 2 PAPER STACKING

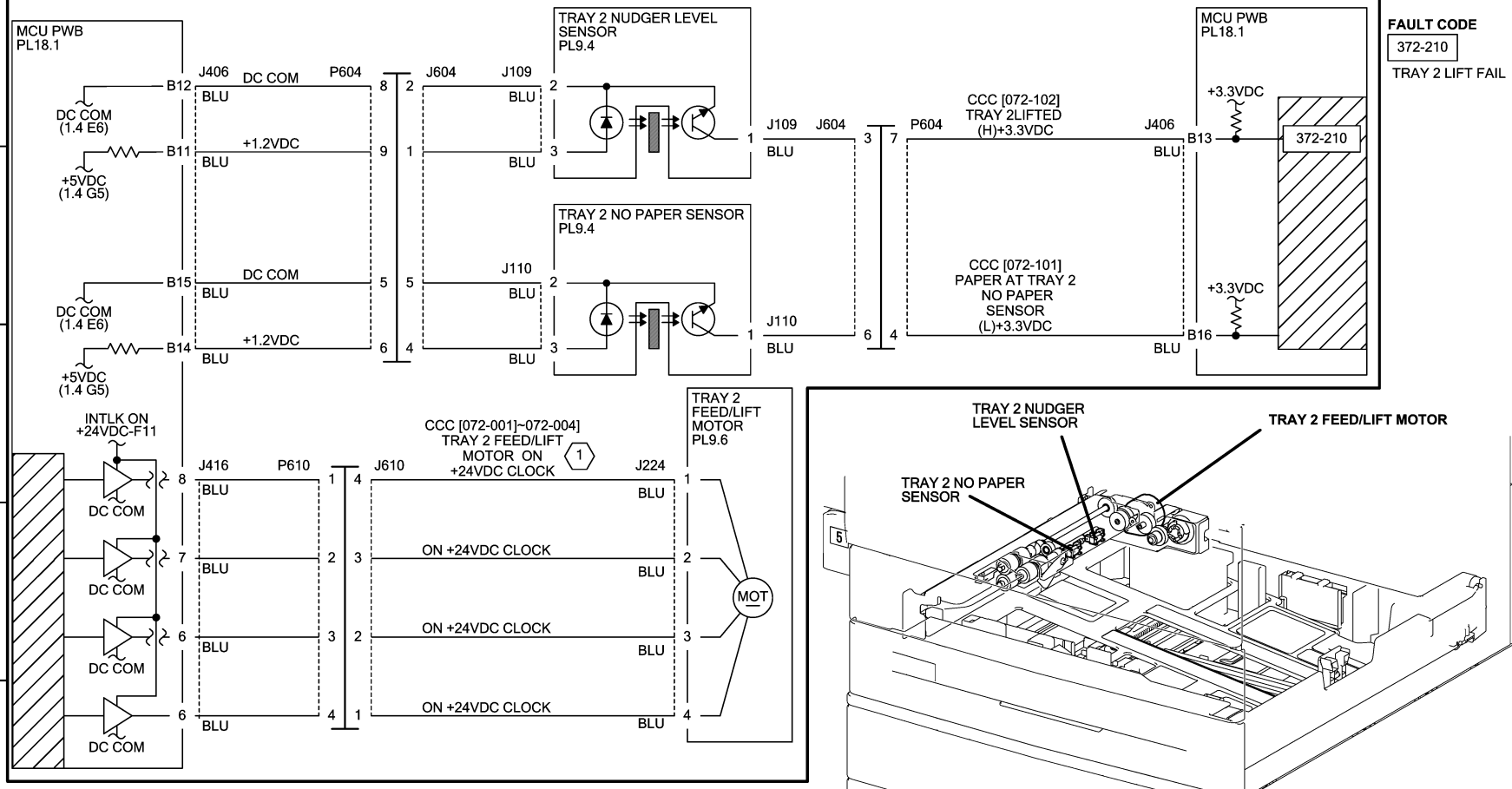

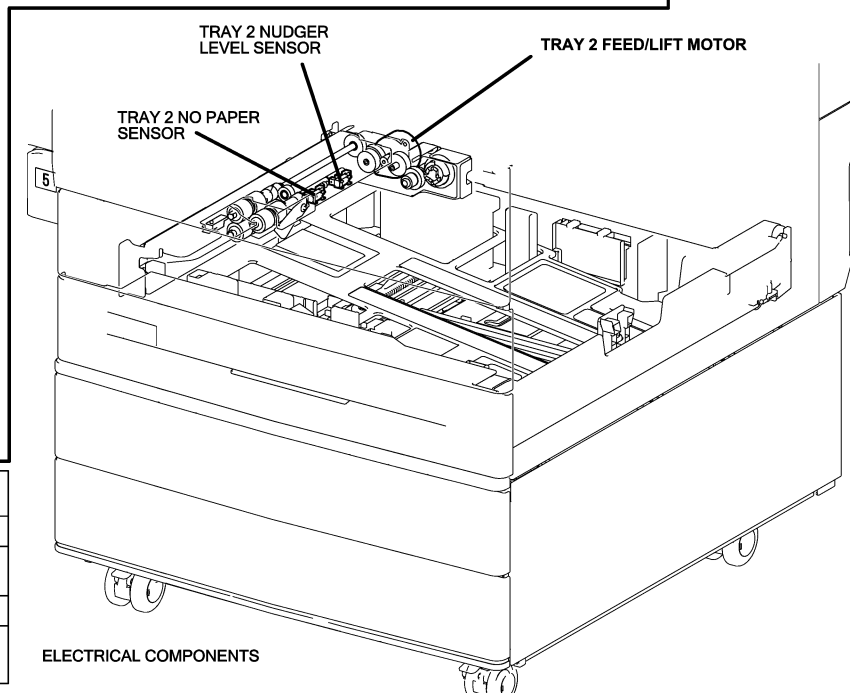

CCC	1 OPERATION
[072-001]	ROTATES THE MOTOR FORWARD. (FEED, 2-PHASE EXCITATION)
[072-002]	ROTATES REVERSE. (LIFT. 2-PHASE EXCITATION) AFTER LEVEL SENSOR TURNS ON IT STOPS. IF LEVEL SENSOR IS ON WHEN THE MOTOR STARTS DRIVING, IT DOES NOT OPERATE.
[072-003]	ROTATES THE MOTOR FORWARD. (FEED, 1-2-PHASE EXCITATION)
[072-004]	ROTATES REVERSE. (LIFT. 1-2-PHASE EXCITATION). AFTER LEVEL SENSOR TURNS ON IT STOPS. IF LEVEL SENSOR IS ON WHEN THE MOTOR STARTS DRIVING, IT DOES NOT OPERATE.

Figure 7 BSD 7.7 - Tray 2 Paper Stacking

7.8 TRAY 3 PAPER STACKING

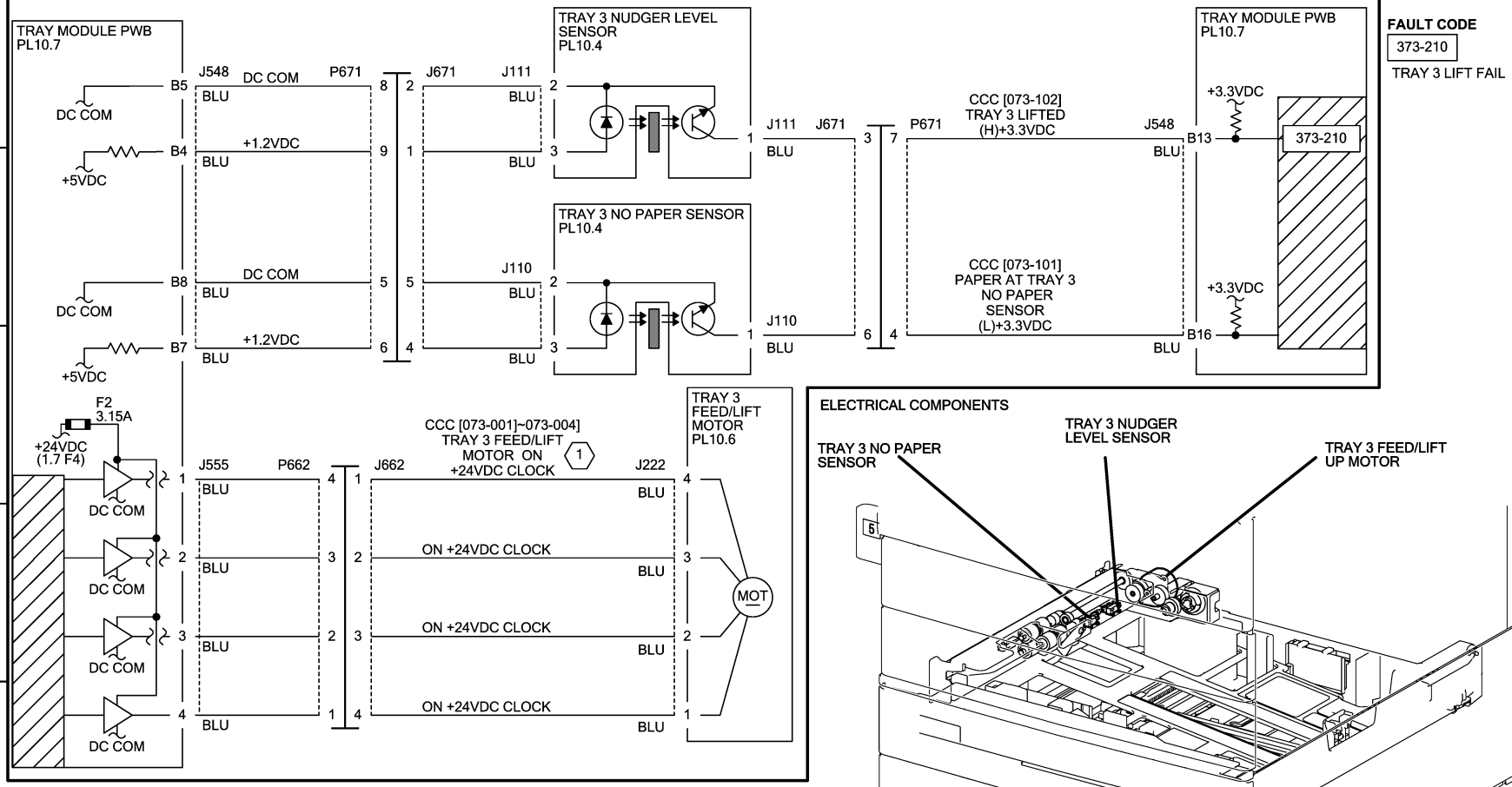

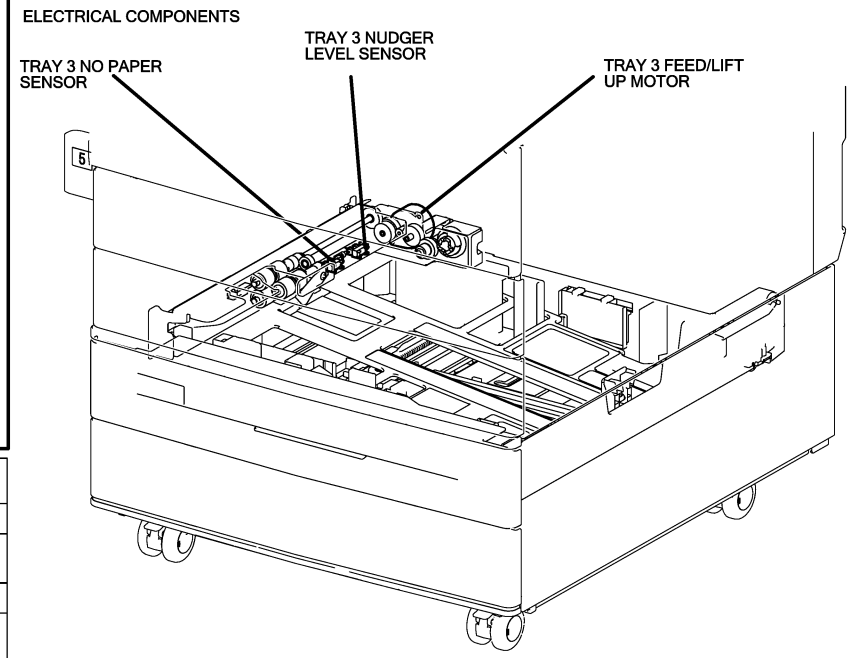

CCC	1 OPERATION
[073-001]	ROTATES THE MOTOR FORWARD. (FEED, 2-PHASE EXCITATION)
[073-002]	ROTATES REVERSE. (LIFT. 2-PHASE EXCITATION) AFTER LEVEL SENSOR TURNS ON IT STOPS. IF LEVEL SENSOR IS ON WHEN THE MOTOR STARTS DRIVING, IT DOES NOT OPERATE.
[073-003]	ROTATES THE MOTOR FORWARD. (FEED, 1-2-PHASE EXCITATION)
[073-004]	ROTATES REVERSE. (LIFT. 1-2-PHASE EXCITATION). AFTER LEVEL SENSOR TURNS ON IT STOPS. IF LEVEL SENSOR IS ON WHEN THE MOTOR STARTS DRIVING, IT DOES NOT OPERATE.

Figure 8 BSD 7.8 - Tray 3 Paper Stacking

7.9 TRAY 4 PAPER STACKING

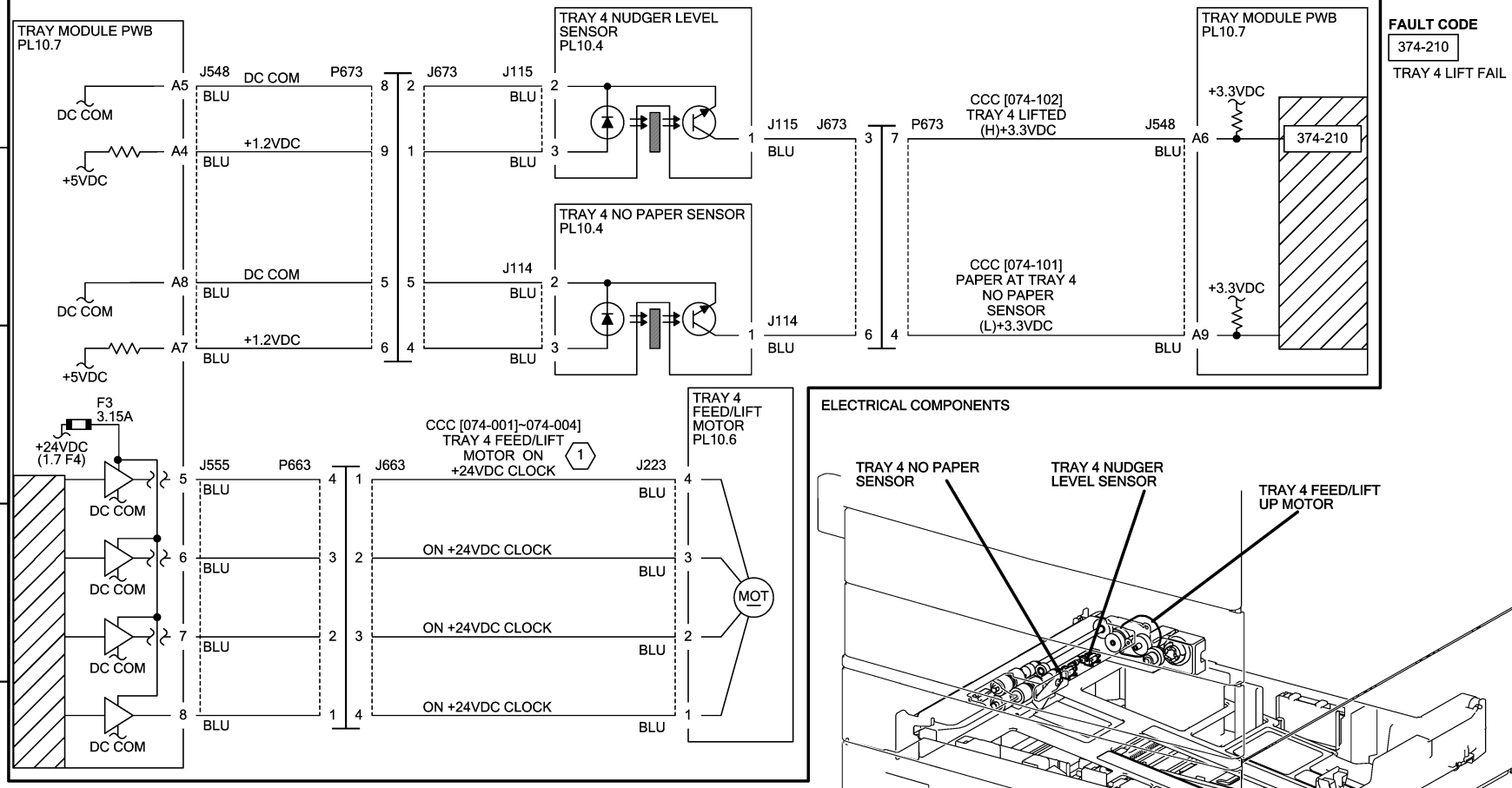

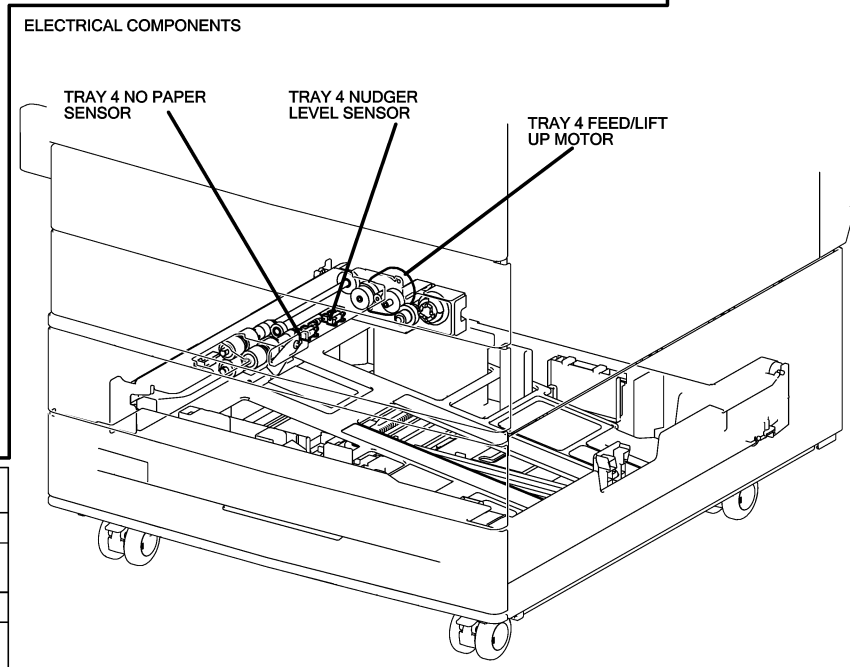

CCC	(1) OPERATION
[074-001]	ROTATES THE MOTOR FORWARD. (FEED, 2-PHASE EXCITATION)
[074-002]	ROTATES REVERSE. (LIFT. 2-PHASE EXCITATION) AFTER LEVEL SENSOR TURNS ON IT STOPS. IF LEVEL SENSOR IS ON WHEN THE MOTOR STARTS DRIVING, IT DOES NOT OPERATE.
[074-003]	ROTATES THE MOTOR FORWARD. (FEED, 1-2-PHASE EXCITATION)
[074-004]	ROTATES REVERSE. (LIFT. 1-2-PHASE EXCITATION). AFTER LEVEL SENSOR TURNS ON IT STOPS. IF LEVEL SENSOR IS ON WHEN THE MOTOR STARTS DRIVING, IT DOES NOT OPERATE.

Figure 9 BSD 7.9 - Tray 4 Paper Stacking

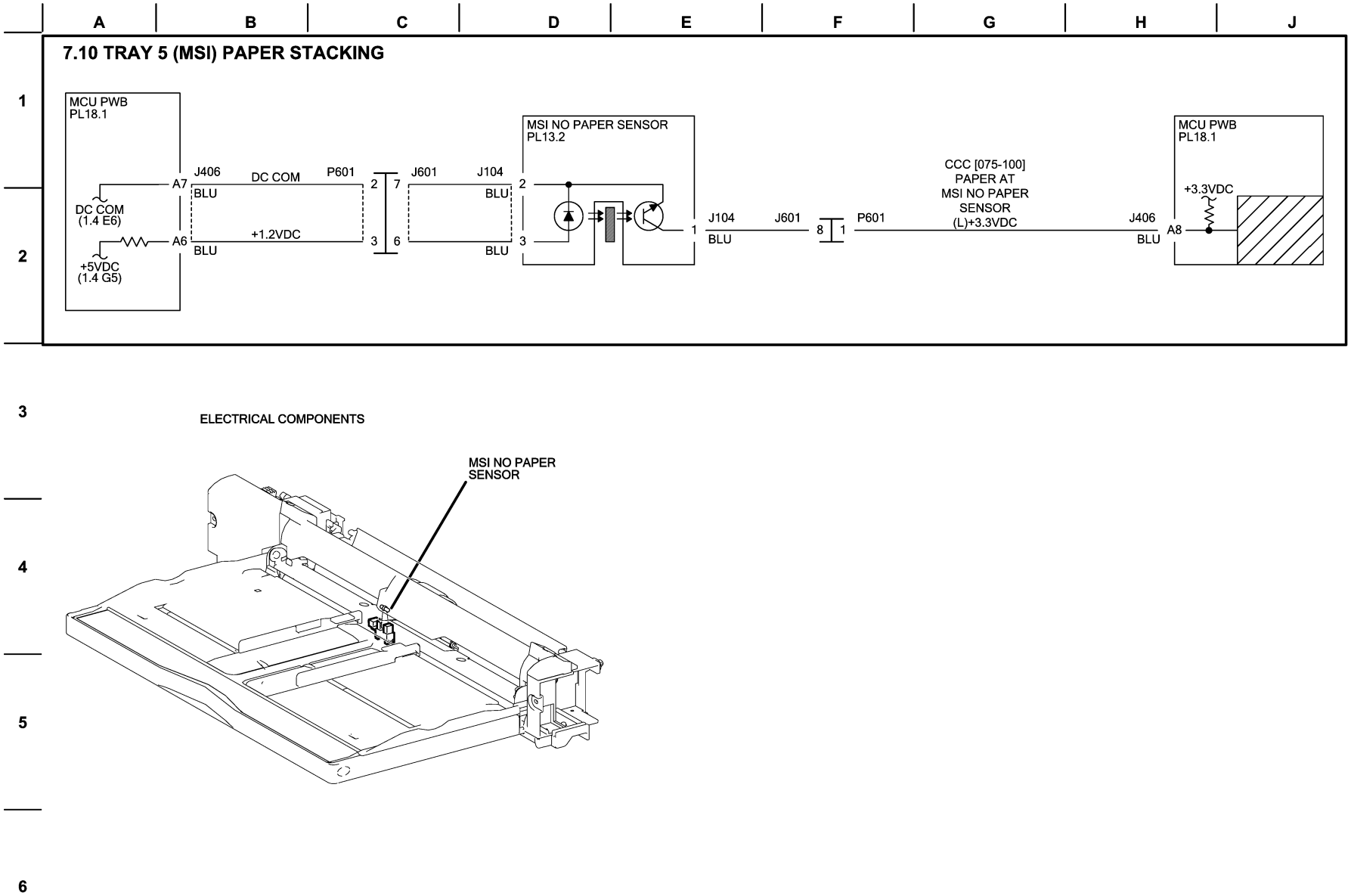

Figure 10 BSD 7.10 - TRAY 5 (MSI) Paper Stacking

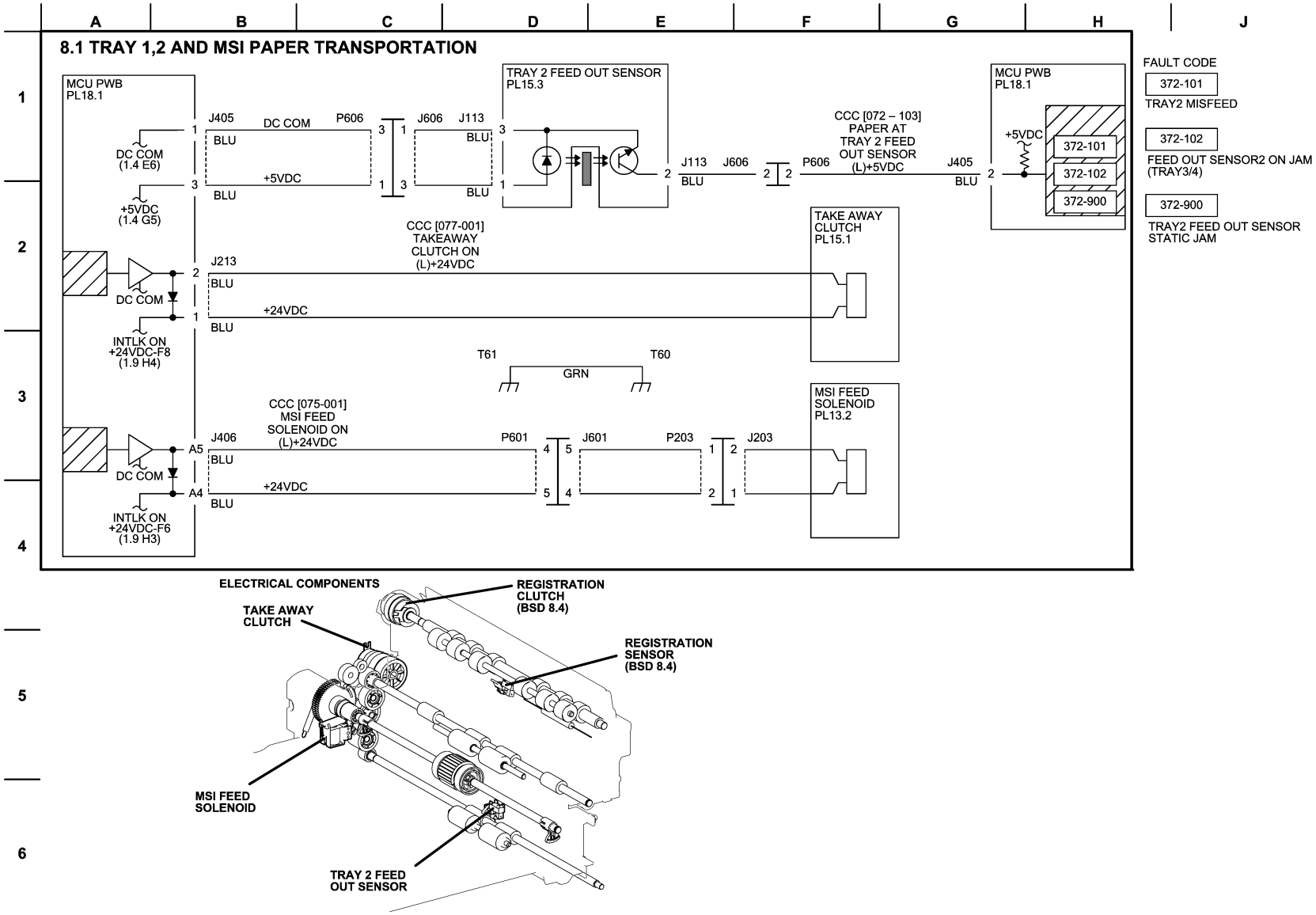

Figure 1 BSD 8.1 - Tray 1, 2, MSI Paper Transportation

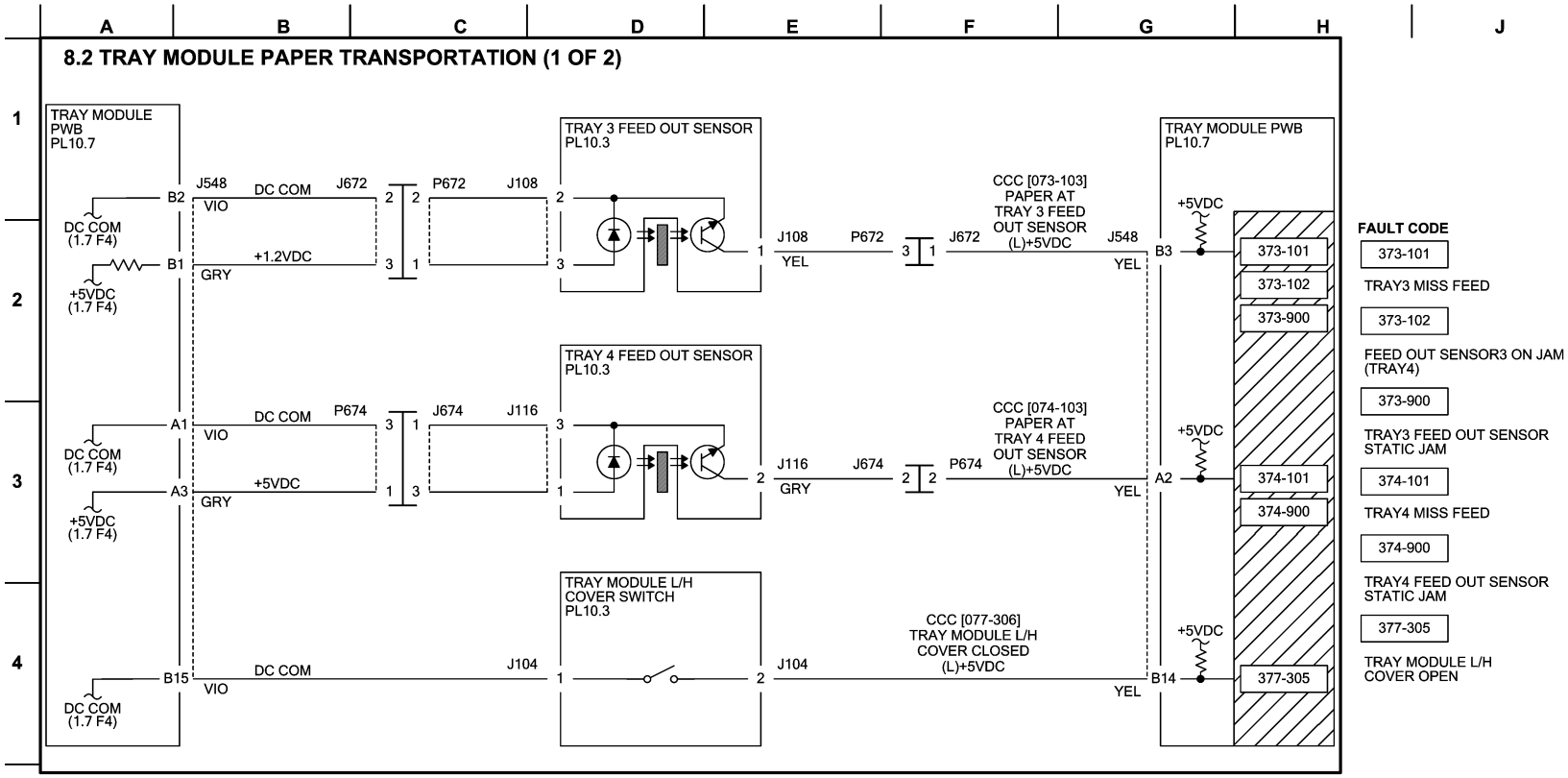

Figure 2 BSD 8.2 - Tray Module Paper Transportation (1 of 2)

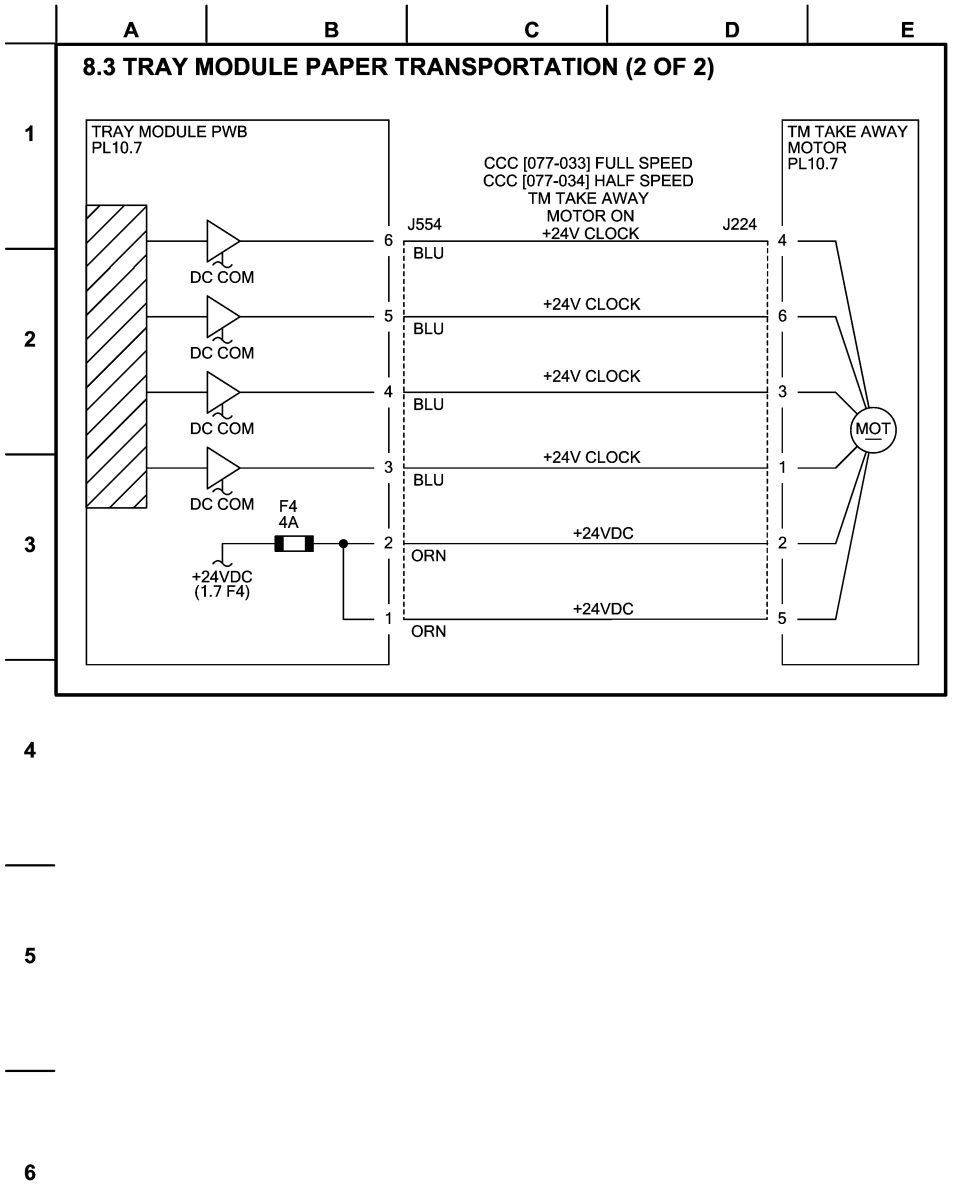

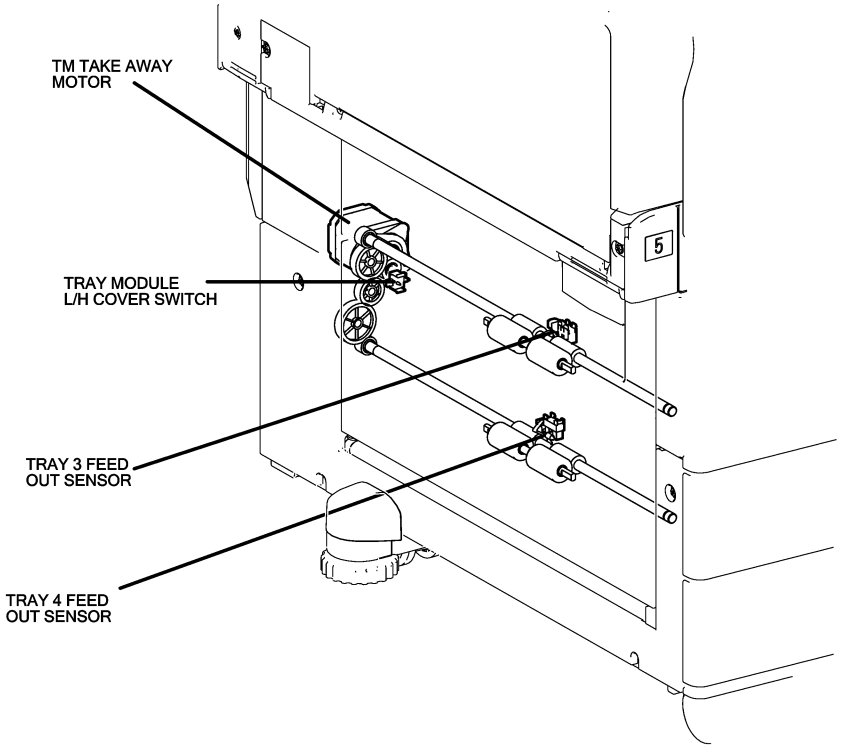

Figure 3 BSD 8.3 - Tray Module Paper Transportation (2 of 2)

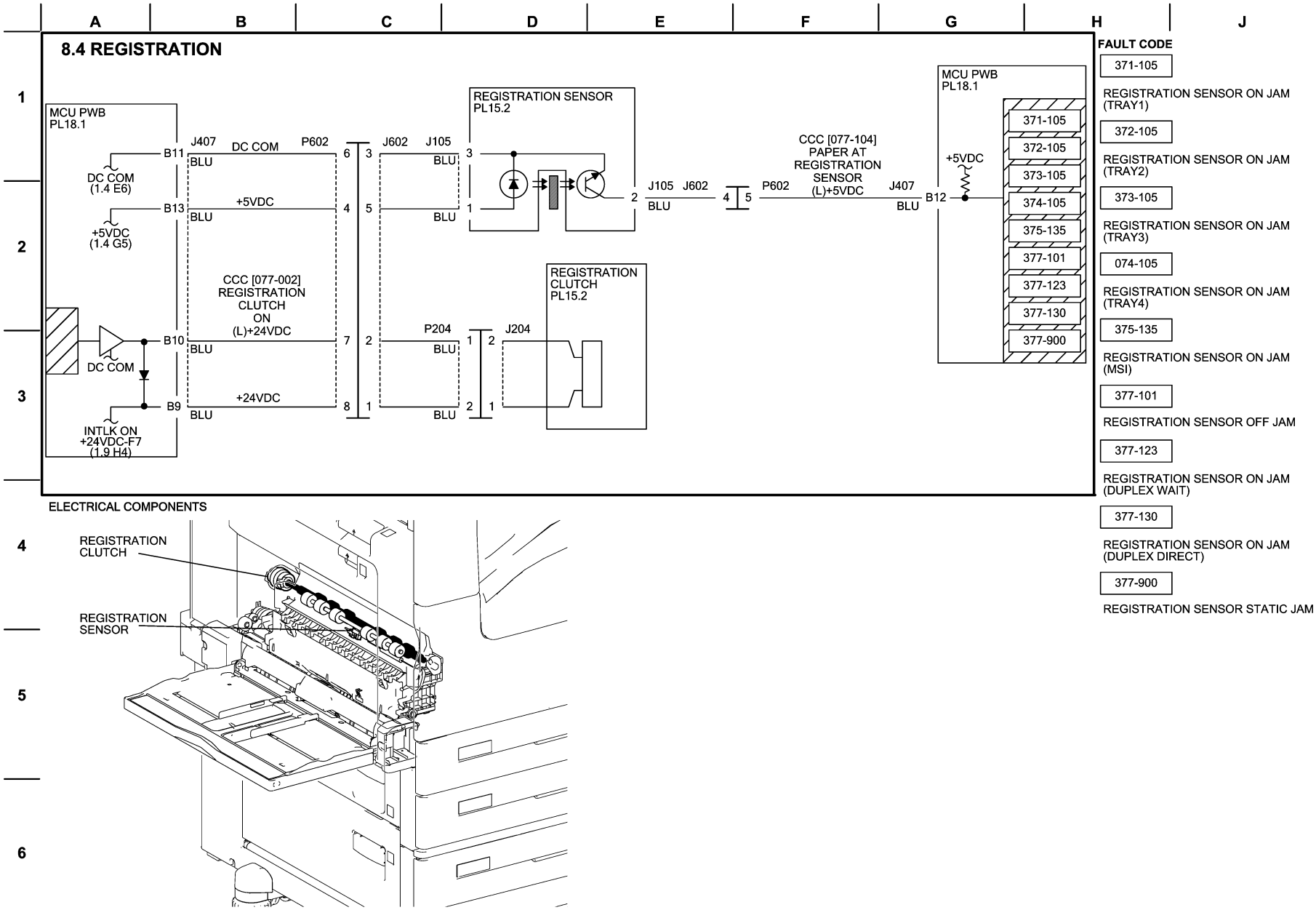

Figure 4 BSD 8.4 - Registration

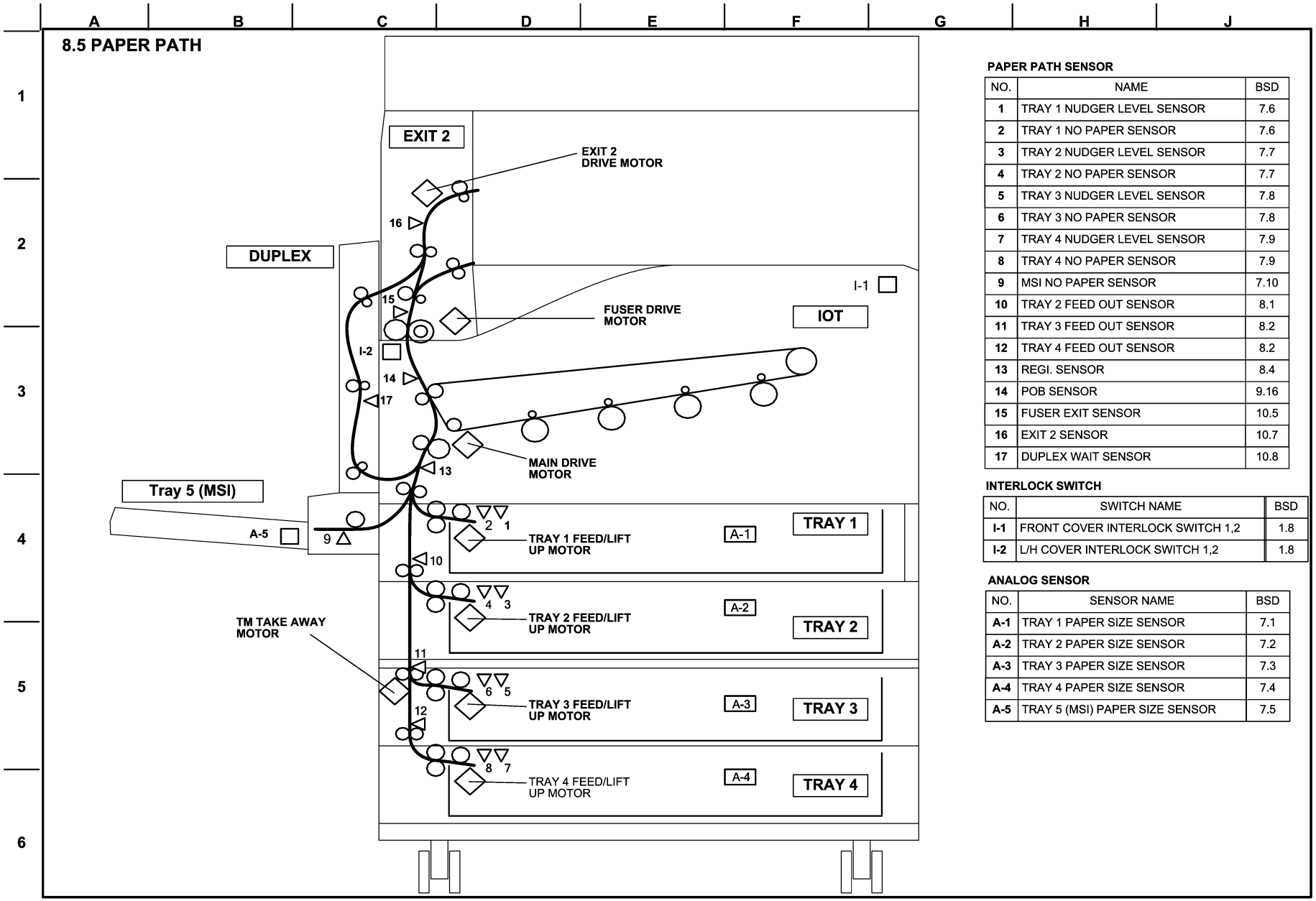

PAPER PATH SENSOR

NO.	NAME	BSD
1	TRAY 1 NUDGER LEVEL SENSOR	7.6
2	TRAY 1 NO PAPER SENSOR	7.6
3	TRAY 2 NUDGER LEVEL SENSOR	7.7
4	TRAY 2 NO PAPER SENSOR	7.7
5	TRAY 3 NUDGER LEVEL SENSOR	7.8
6	TRAY 3 NO PAPER SENSOR	7.8
7	TRAY 4 NUDGER LEVEL SENSOR	7.9
8	TRAY 4 NO PAPER SENSOR	7.9
9	MSI NO PAPER SENSOR	7.10
10	TRAY 2 FEED OUT SENSOR	8.1
11	TRAY 3 FEED OUT SENSOR	8.2
12	TRAY 4 FEED OUT SENSOR	8.2
13	REGI. SENSOR	8.4
14	POB SENSOR	9.16
15	FUSER EXIT SENSOR	10.5
16	EXIT 2 SENSOR	10.7
17	DUPLEX WAIT SENSOR	10.8

INTERLOCK SWITCH

NO.	SWITCH NAME	BSD
I-1	FRONT COVER INTERLOCK SWITCH 1,2	1.8
I-2	L/H COVER INTERLOCK SWITCH 1,2	1.8

ANALOG SENSOR

NO.	SENSOR NAME	BSD
A-1	TRAY 1 PAPER SIZE SENSOR	7.1
A-2	TRAY 2 PAPER SIZE SENSOR	7.2
A-3	TRAY 3 PAPER SIZE SENSOR	7.3
A-4	TRAY 4 PAPER SIZE SENSOR	7.4
A-5	TRAY 5 (MSI) PAPER SIZE SENSOR	7.5

Figure 5 BSD 8.5 - Paper Path

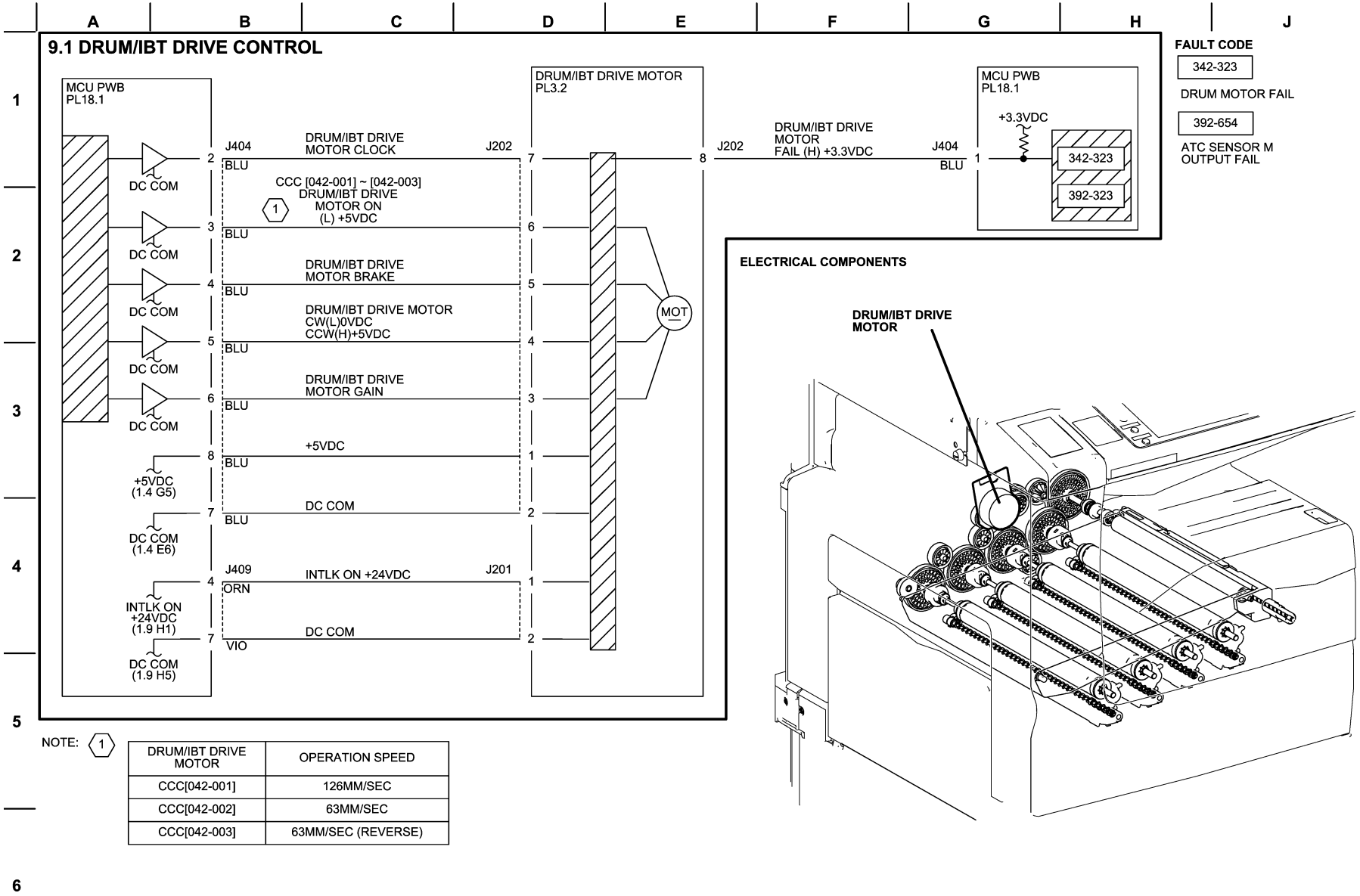

DRUM/IBT DRIVE MOTOR	OPERATION SPEED
CCC[042-001]	126MM/SEC
CCC[042-002]	63MM/SEC
CCC[042-003]	63MM/SEC (REVERSE)

Figure 1 BSD 9.1 - Drum/IBT Drive Control

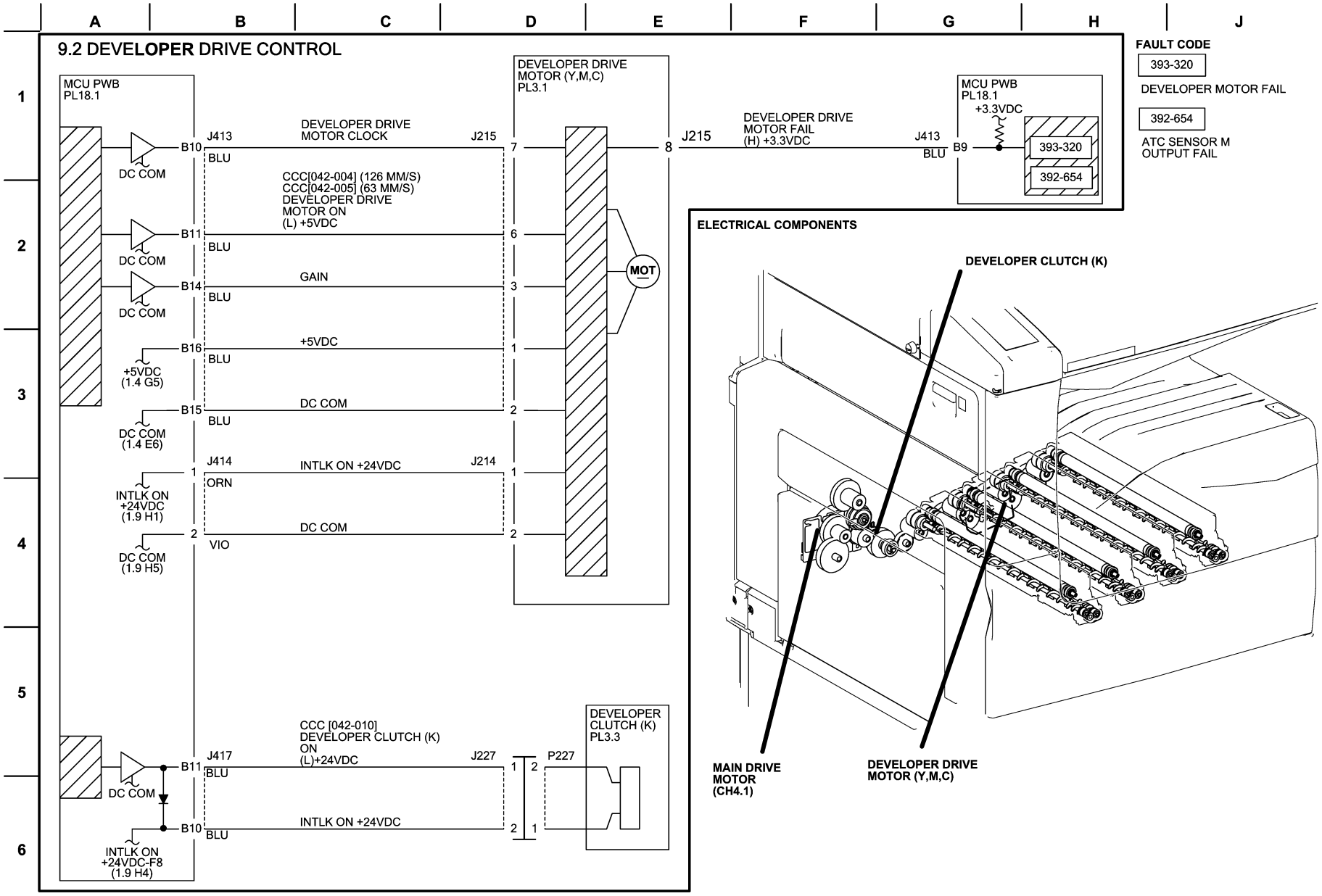

Figure 2 BSD 9.2 - Developer Drive Control

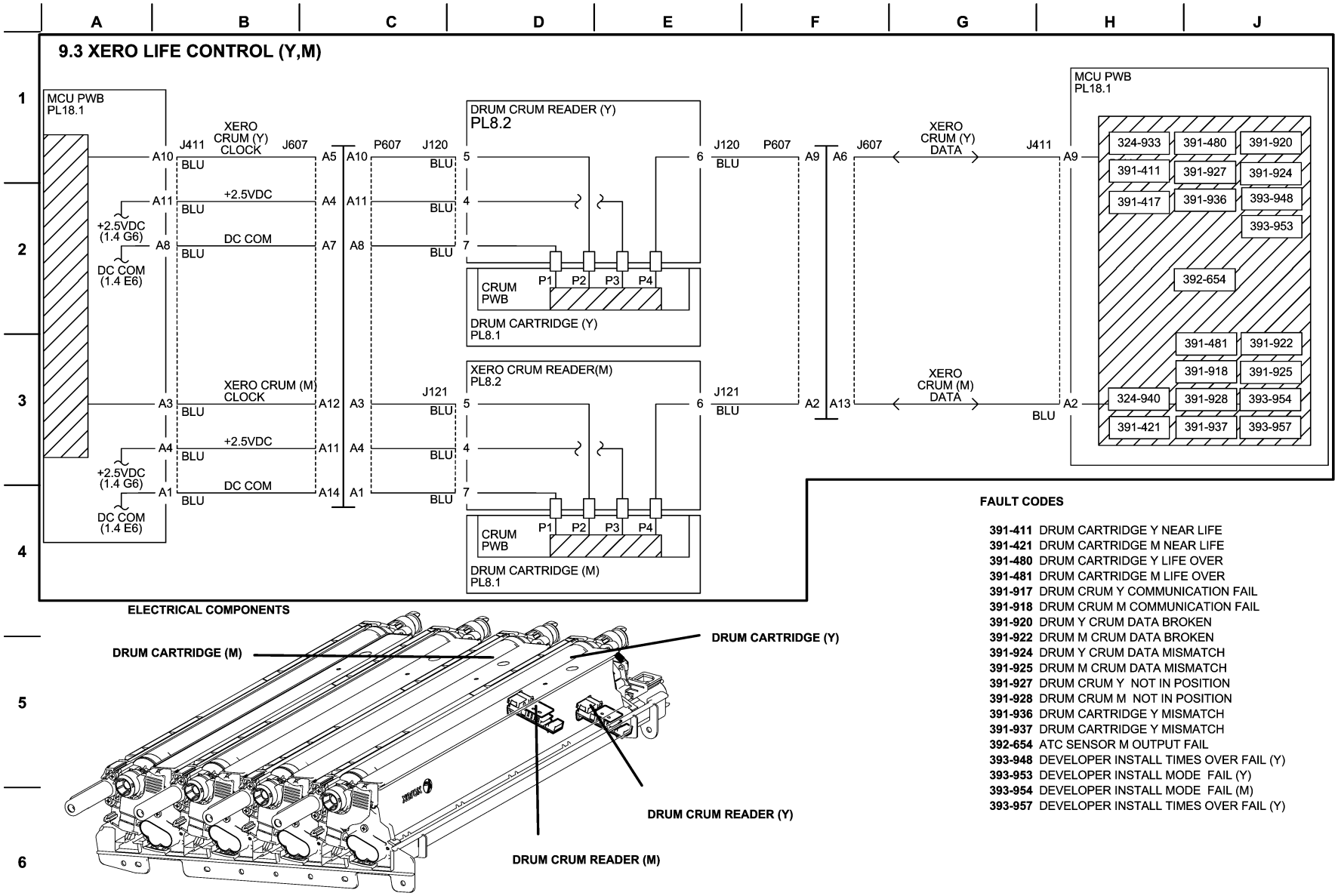

FAULT CODES

391-411	DRUM CARTRIDGE Y NEAR LIFE
391-421	DRUM CARTRIDGE M NEAR LIFE
391-480	DRUM CARTRIDGE Y LIFE OVER
391-481	DRUM CARTRIDGE M LIFE OVER
391-917	DRUM CRUM Y COMMUNICATION FAIL
391-918	DRUM CRUM M COMMUNICATION FAIL
391-920	DRUM Y CRUM DATA BROKEN
391-922	DRUM M CRUM DATA BROKEN
391-924	DRUM Y CRUM DATA MISMATCH
391-925	DRUM M CRUM DATA MISMATCH
391-927	DRUM CRUM Y NOT IN POSITION
391-928	DRUM CRUM M NOT IN POSITION
391-936	DRUM CARTRIDGE Y MISMATCH
391-937	DRUM CARTRIDGE Y MISMATCH
392-654	ATC SENSOR M OUTPUT FAIL
393-948	DEVELOPER INSTALL TIMES OVER FAIL (Y)
393-953	DEVELOPER INSTALL MODE FAIL (Y)
393-954	DEVELOPER INSTALL MODE FAIL (M)
393-957	DEVELOPER INSTALL TIMES OVER FAIL (Y)

Figure 3 BSD 9.3 - Xero Life Control (Y, M)

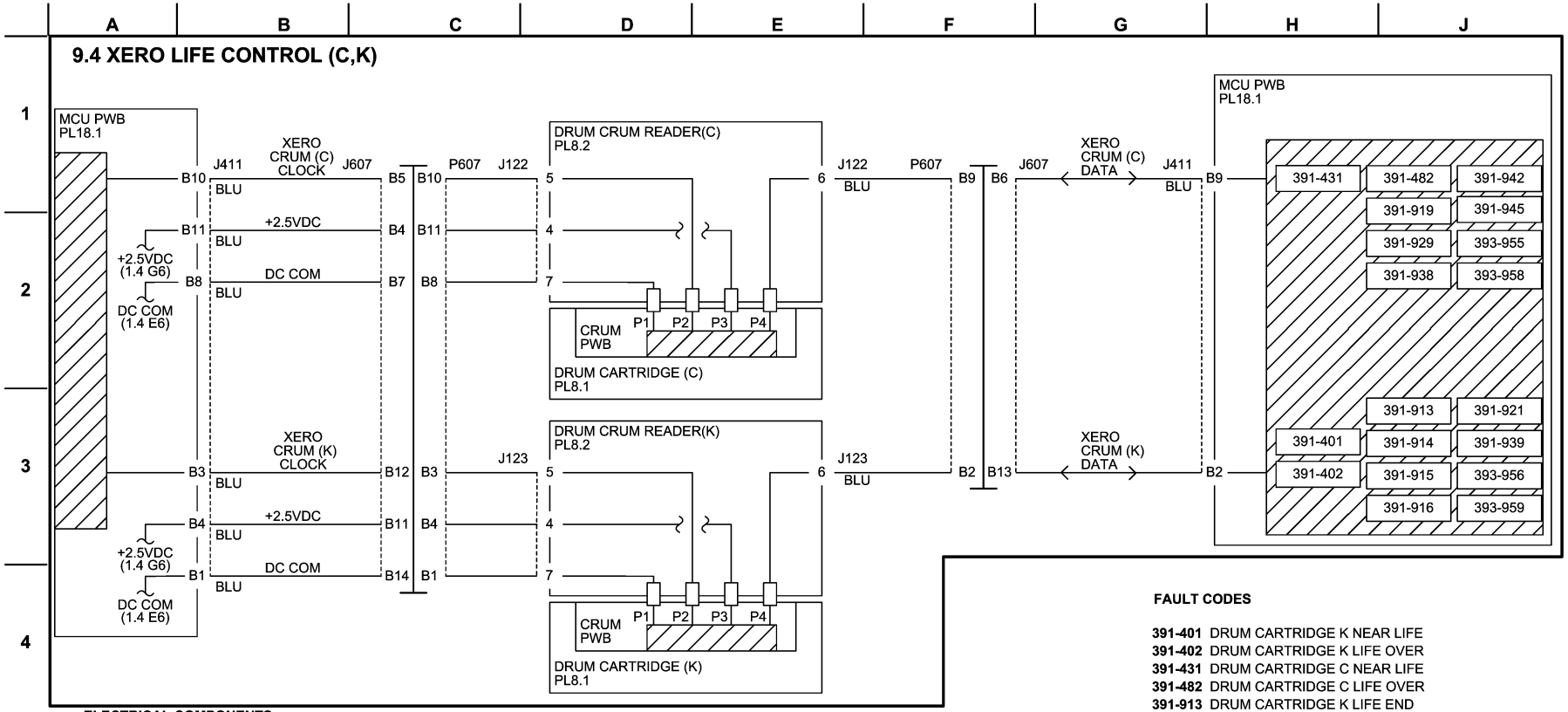

ELECTRICAL COMPONENTS

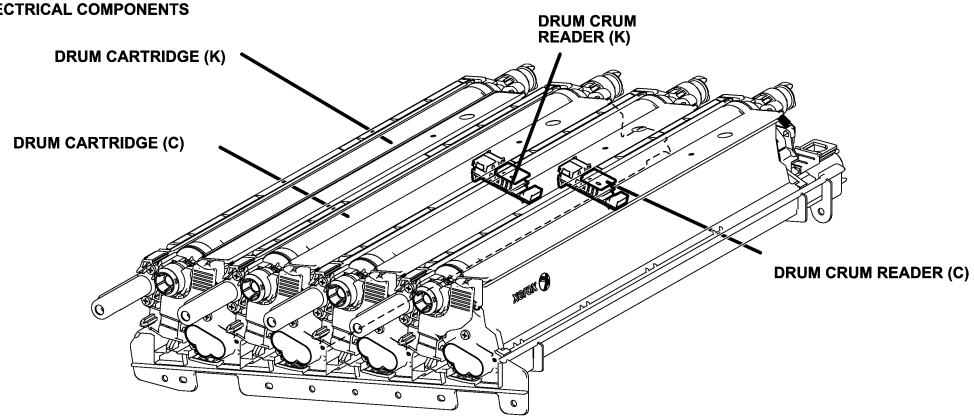

FAULT CODES

391-401	DRUM CARTRIDGE K NEAR LIFE
391-402	DRUM CARTRIDGE K LIFE OVER
391-431	DRUM CARTRIDGE C NEAR LIFE
391-482	DRUM CARTRIDGE C LIFE OVER
391-913	DRUM CARTRIDGE K LIFE END
391-914	DRUM CRUM K COMMUNICATION FAIL
391-915	DRUM CRUM K DATA BROKEN
391-916	DRUM CRUM K DATA MISMATCH
391-919	DRUM CRUM C COMMUNICATION FAIL
391-921	DRUM CRUM K NOT IN POSITION
391-923	DRUM CRUM C DATA BROKEN
391-926	DRUM CRUM DATA C MISMATCH
391-929	DRUM CRUM C NOT IN POSITION
391-938	DRUM CARTRIDGE C MISMATCH
391-939	DRUM CARTRIDGE K MISMATCH
393-955	DEVELOPER INSTALL MODE FAIL (C)
393-956	DEVELOPER INSTALL MODE FAIL (K)
393-958	DEVELOPER INSTALL TIMES OVER FAIL (C)
393-959	DEVELOPER INSTALL TIMES OVER FAIL (K)

Figure 4 BSD 9.4 - Xero Life Control (C, K)

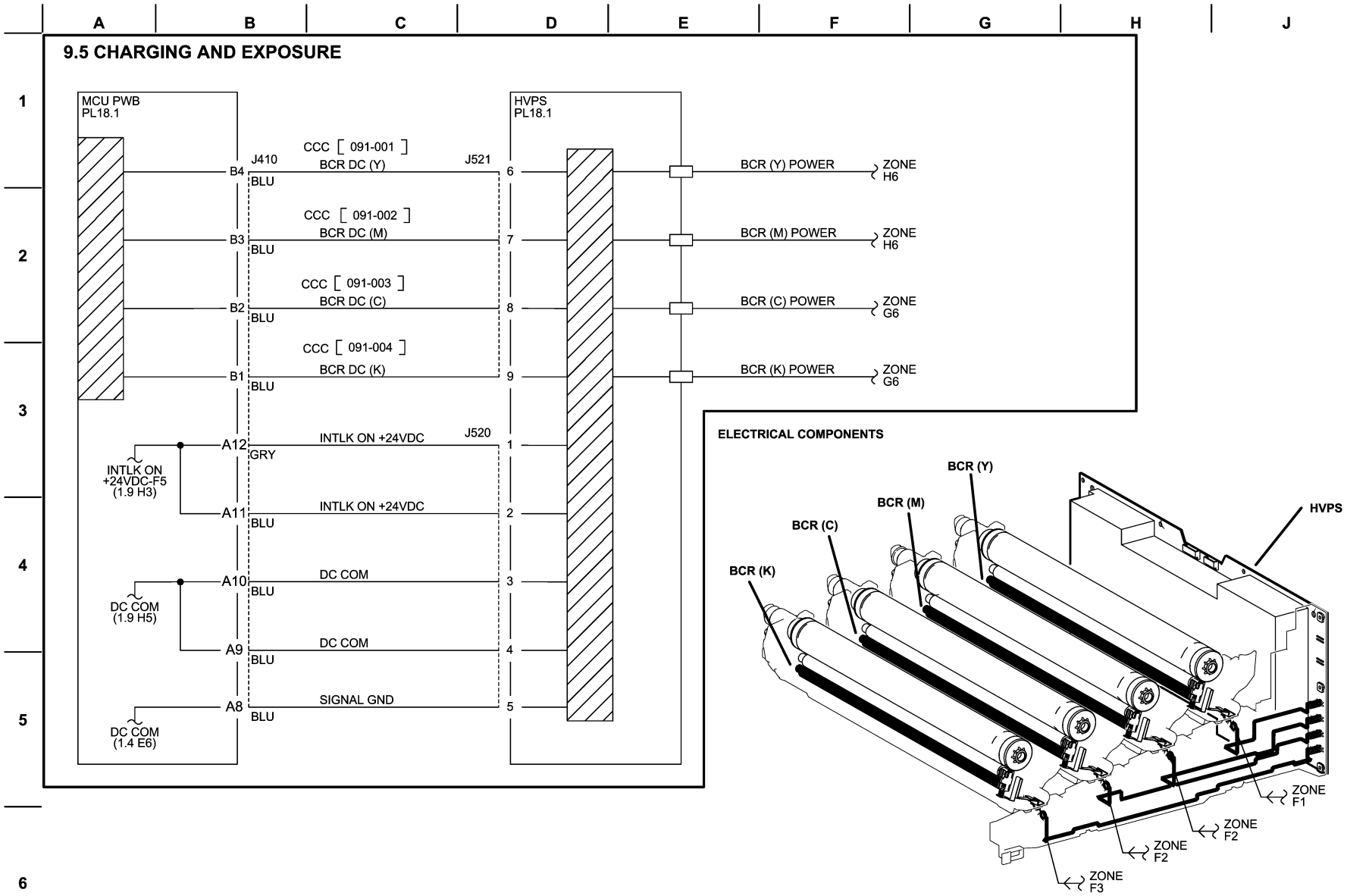

Figure 5 BSD 9.5 - Charging & Exposure

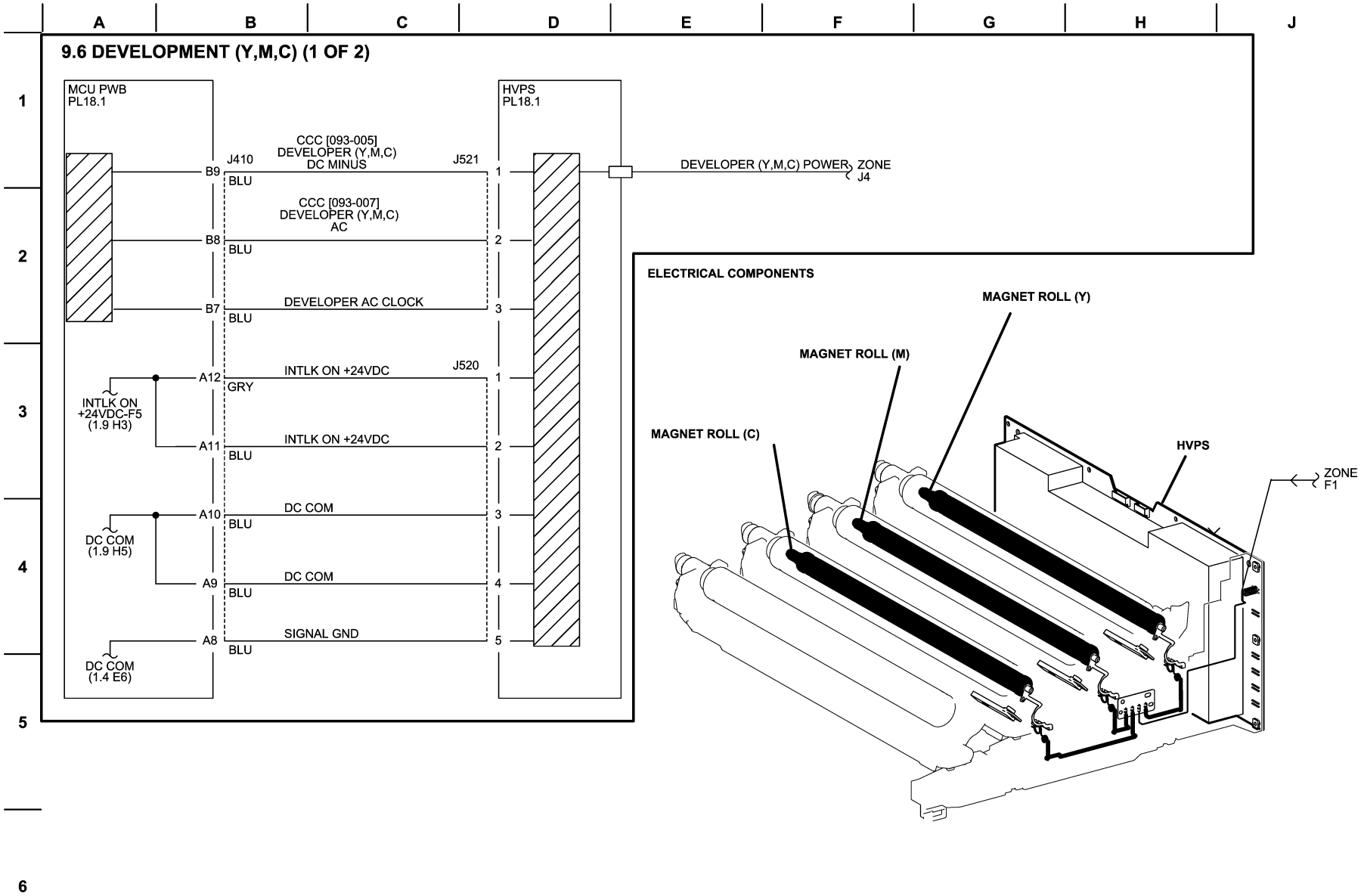

Figure 6 BSD 9.6 - Development (YMC) 1 of 2

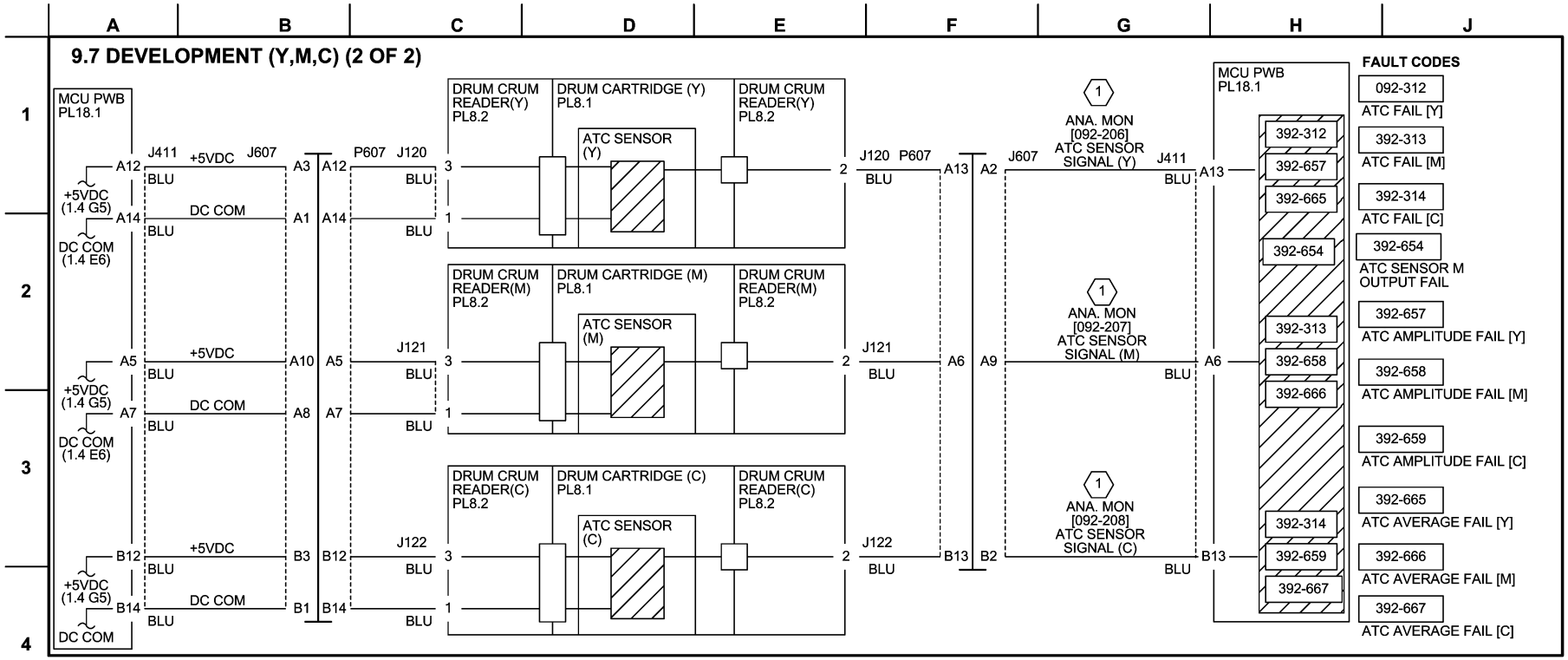

ELECTRICAL COMPONENTS

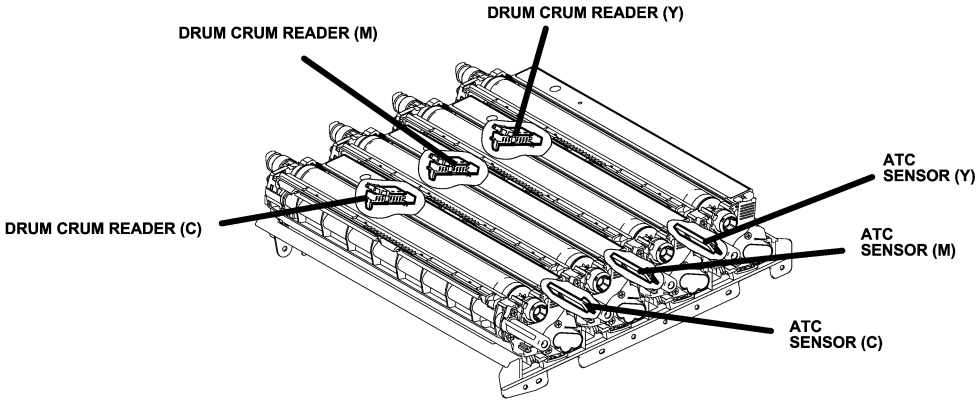

NOTE: (1)

ANALOG MONITOR [092-206] ~ [092-208] DISPLAYS ATC SENSOR A/D VALUE. NORMAL RANGE = 0 TO 1023

Figure 7 BSD 9.7 - Development (YMC) 2 of 2

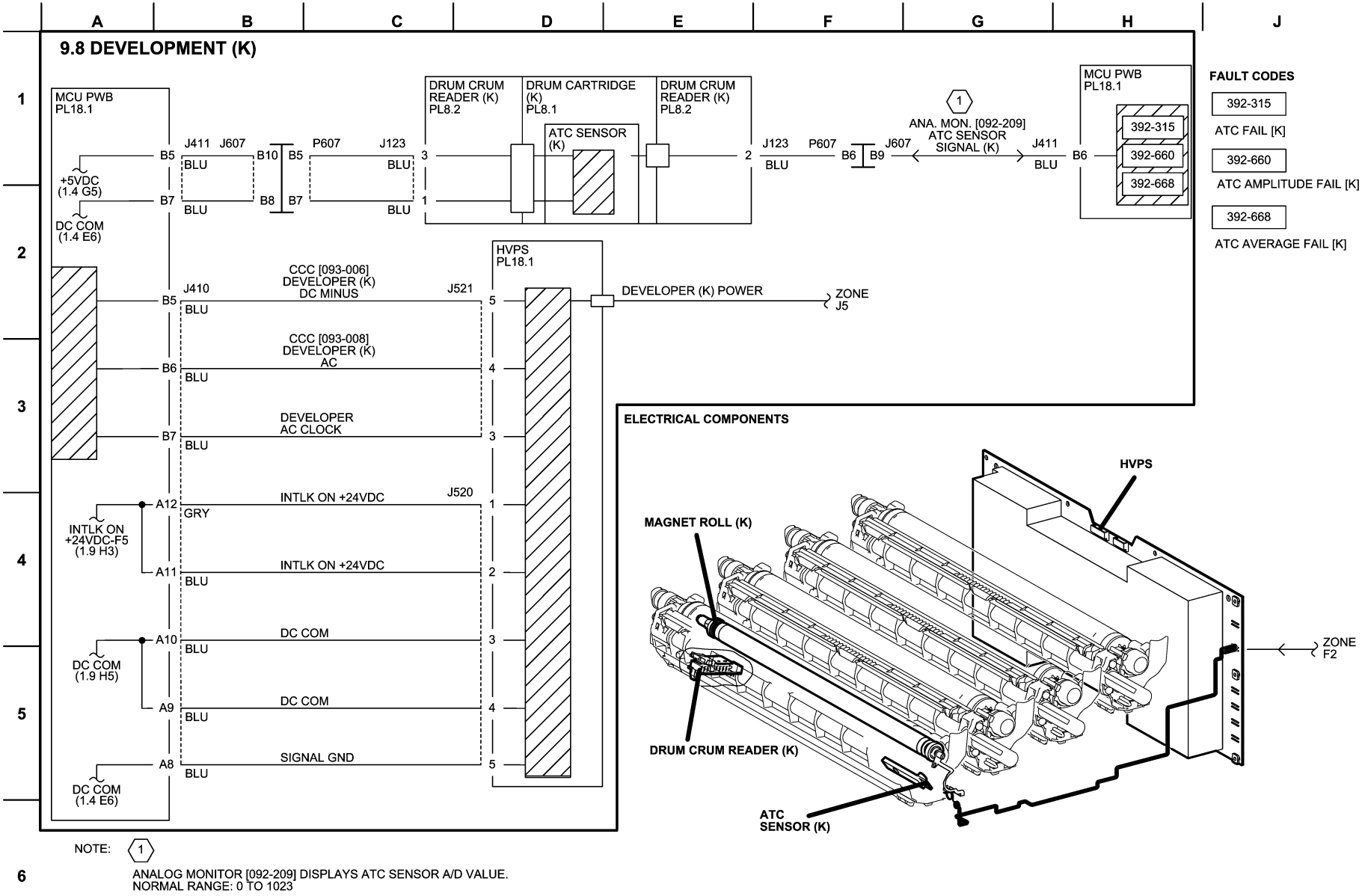

Figure 8 BSD 9.8 - Development (K)

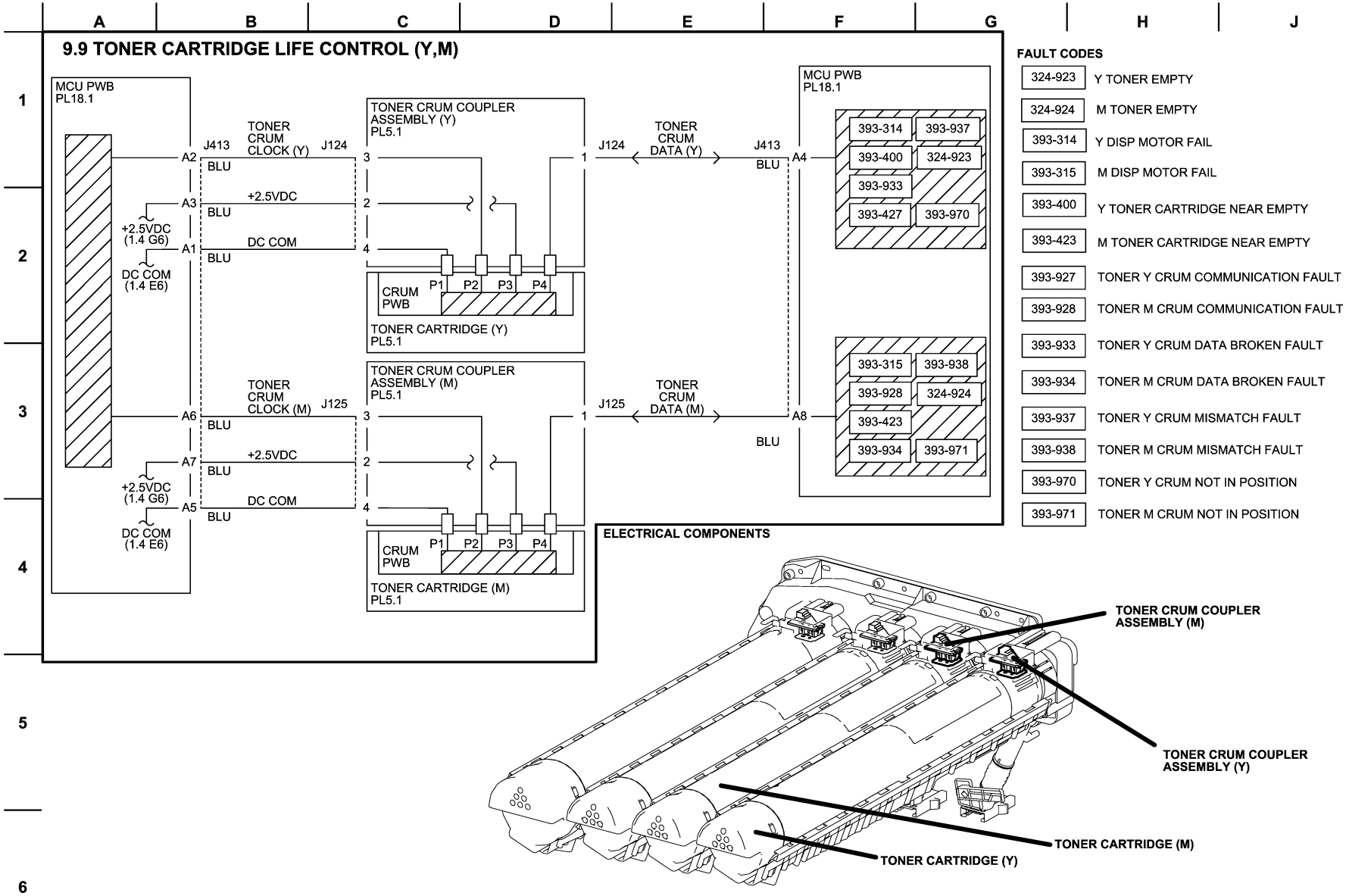

Figure 9 BSD 9.9 - Toner Cartridge Life Control (Y, M)

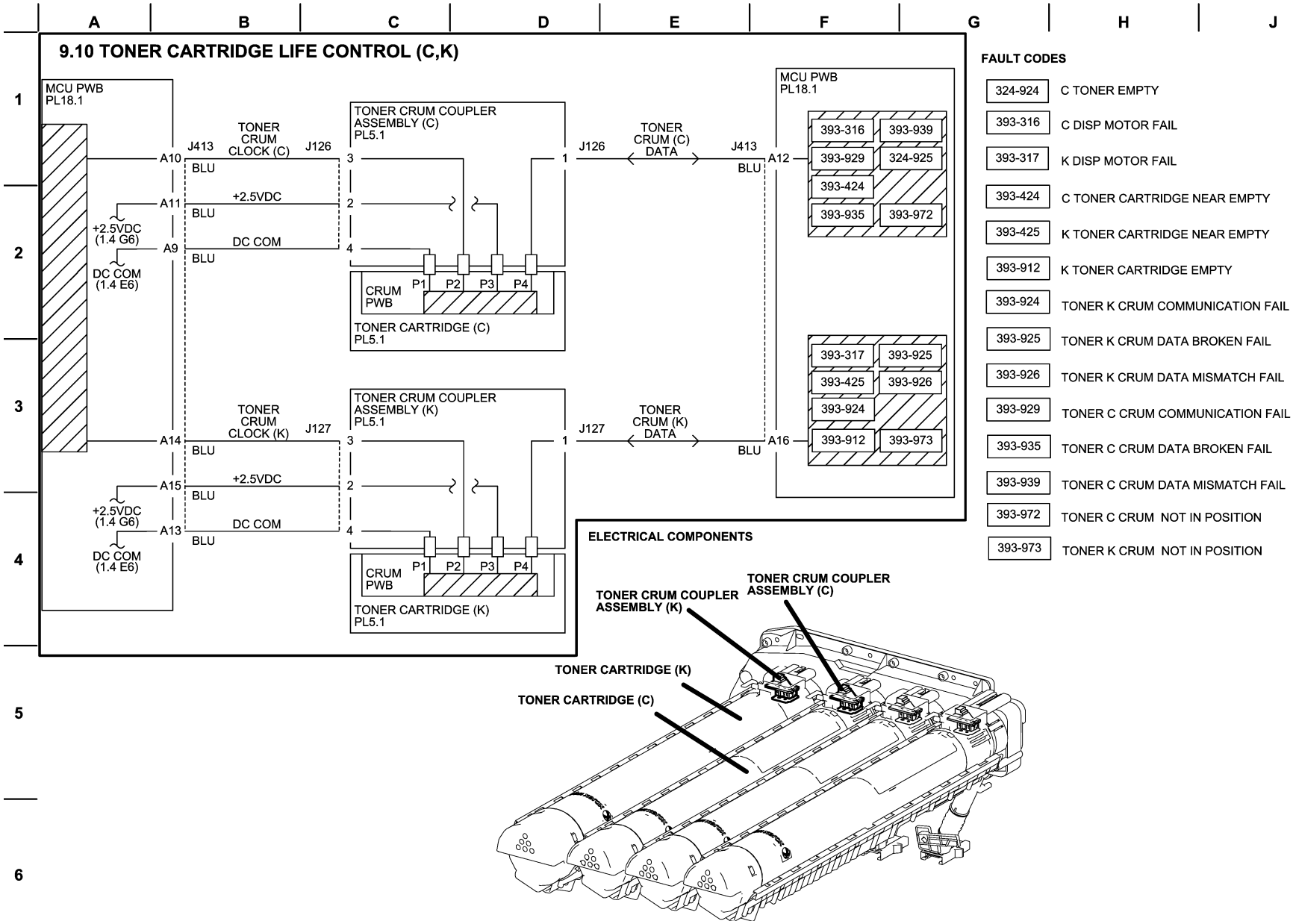

Figure 10 BSD 9.10 - Toner Cartridge Life ControL (C, K)

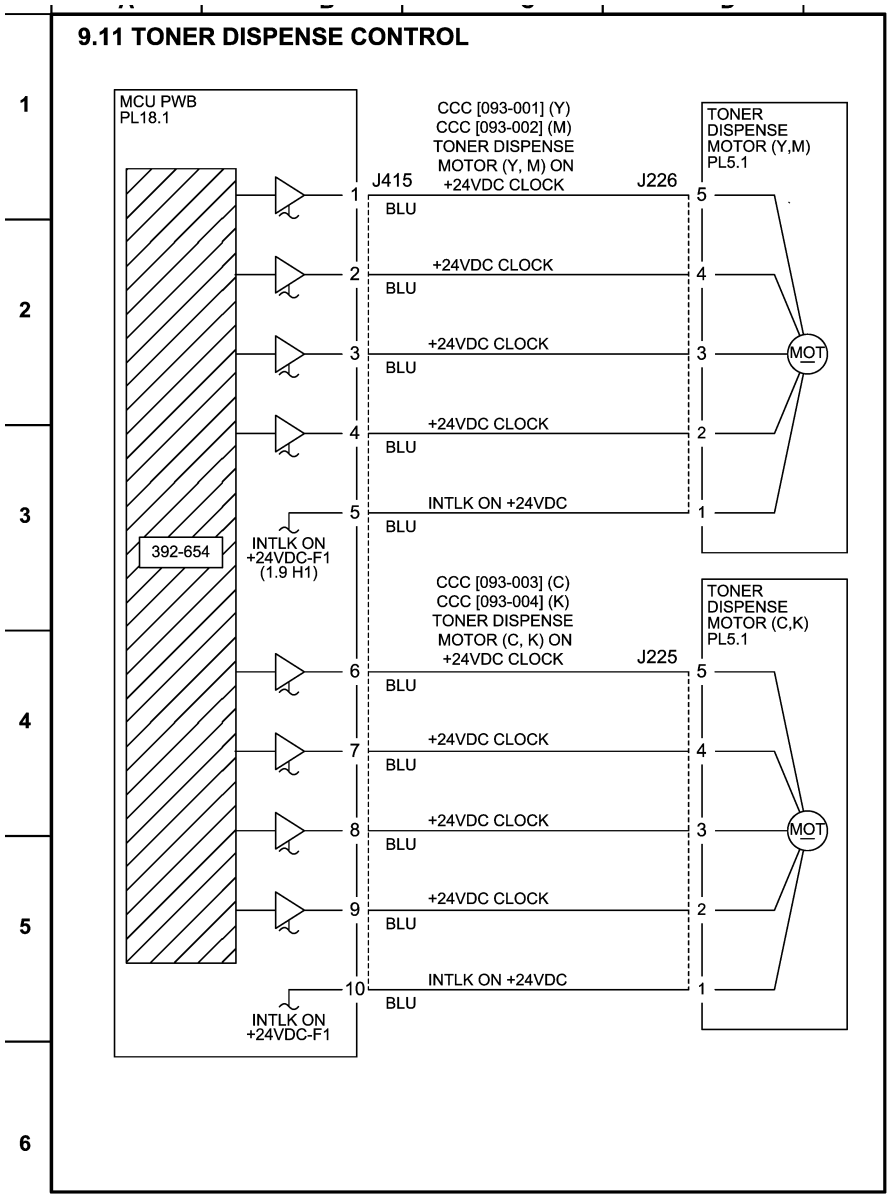

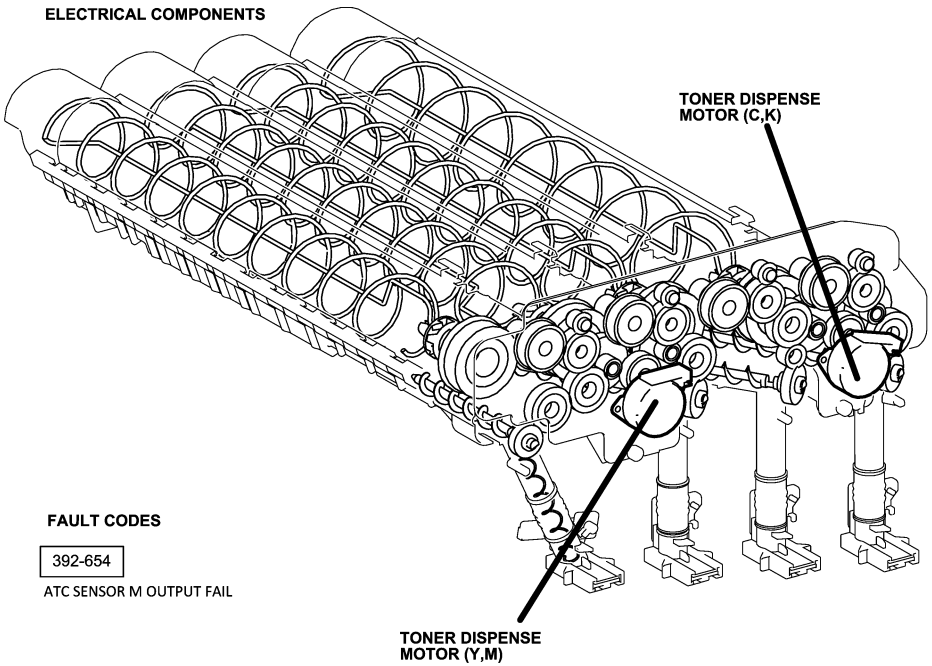

Figure 11 BSD 9.11 - Toner Dispense Control

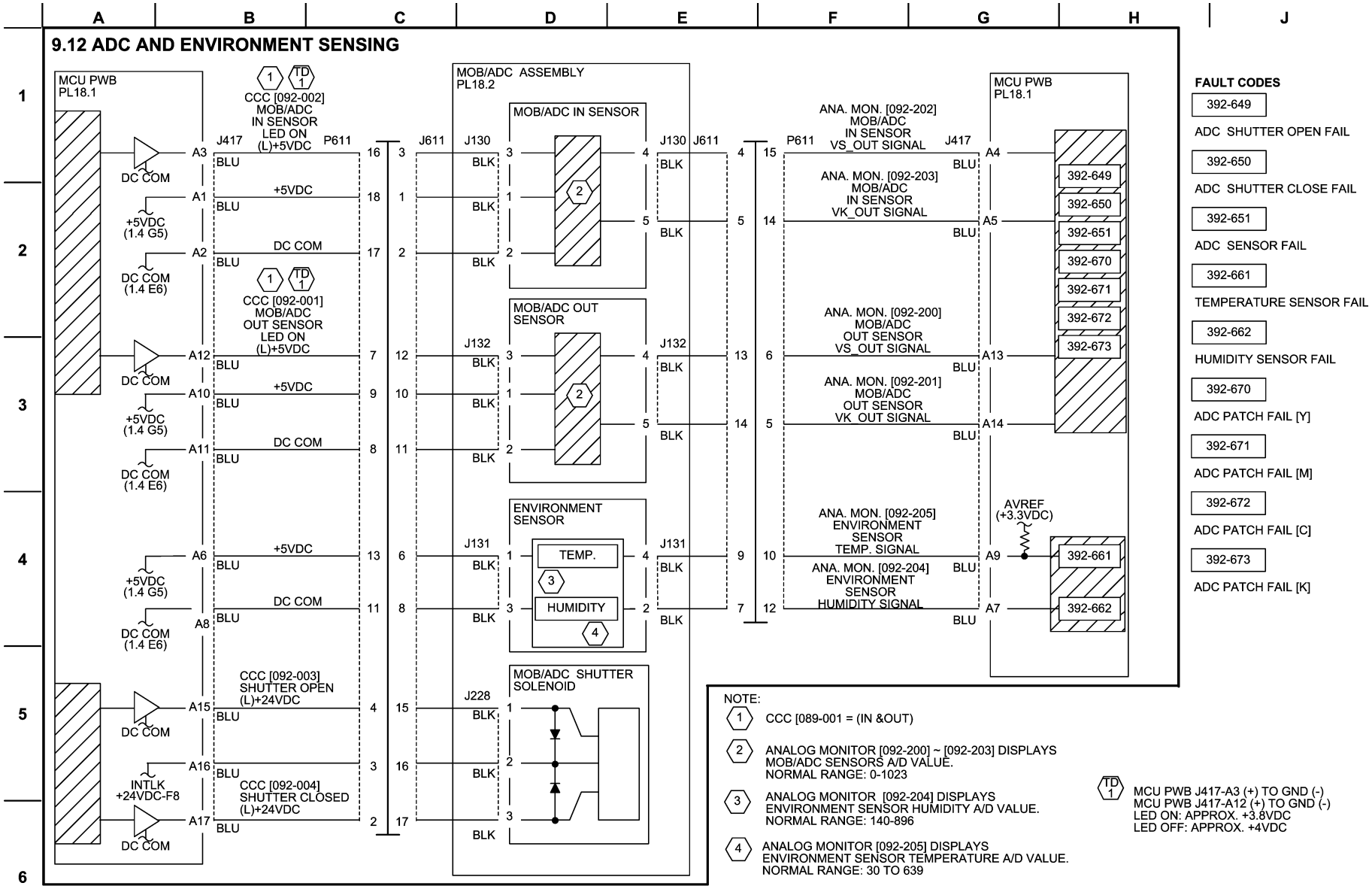

Figure 12 BSD 9.12 - ADC & Environment Sensing

9.13 COLOR REGISTRATION CONTROL

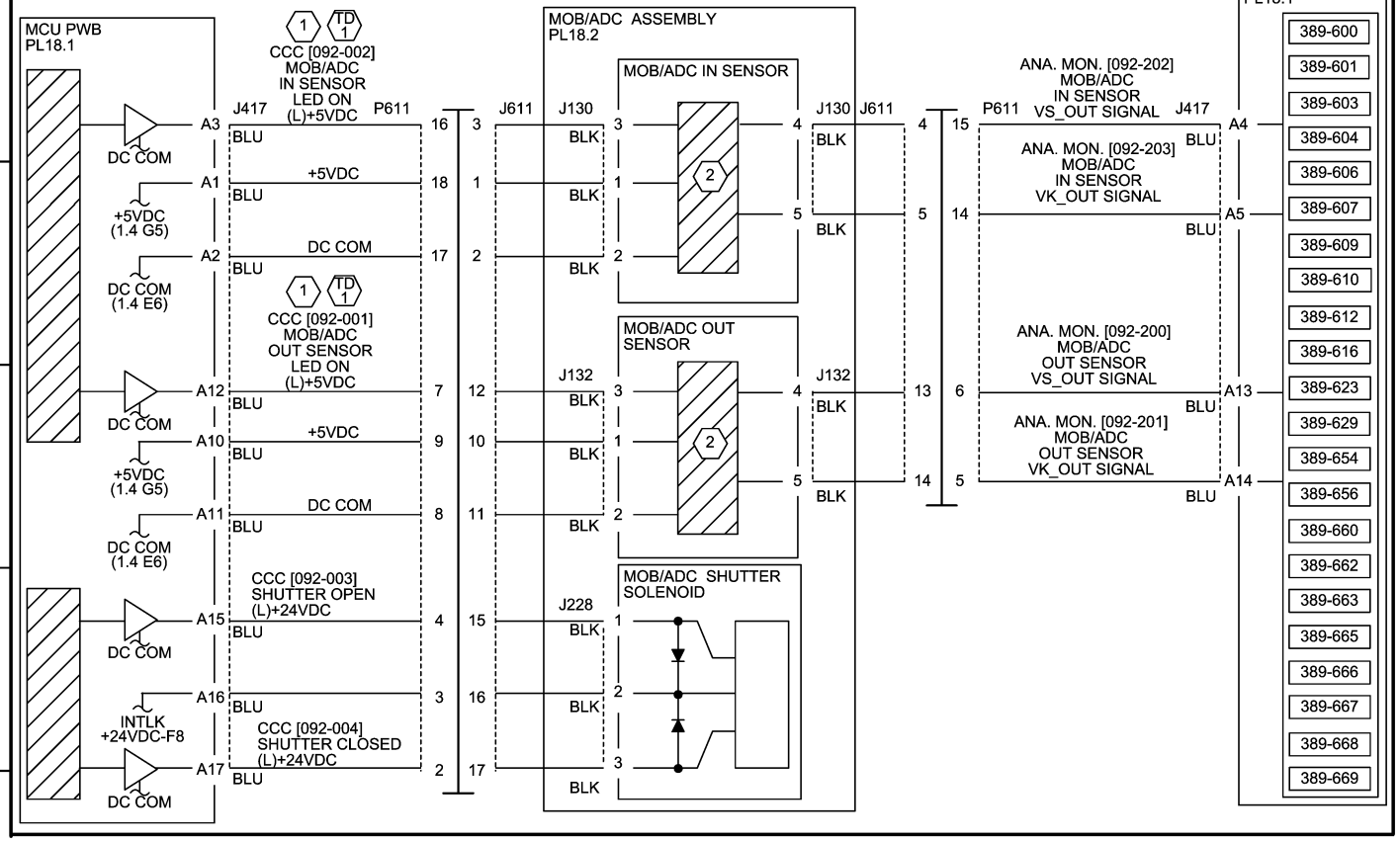

FAULT CODES

389-600 RC SAMPLE LATERAL FAULT-A1
389-601 RC SAMPLE BLOCK FAULT-A1-IN
389-603 RC SAMPLE BLOCK FAULT-A1-OUT
389-604 RC SAMPLE BLOCK FAULT-B-#1-IN
389-606 RC SAMPLE BLOCK FAULT-B-#1-OUT
389-607 RC SAMPLE BLOCK FAULT-B-#2-IN
389-609 RC SAMPLE BLOCK FAULT-B-#2-OUT
389-610 RC SAMPLE BLOCK FAULT-B-#3-IN
389-612 RC SAMPLE BLOCK FAULT-B-#3-OUT
389-616 RC DATA OVERFLOW FAULT
389-623 VSOUT STABILITY FAULT-IN
389-629 VSOUT STABILITY FAULT-OUT
389-654 RC SAMPLE BLOCK FAULT-B-#0-IN
389-656 RC SAMPLE BLOCK FAULT-B-#0-OUT
389-660 RC SAMPLE COUNT FAULT-B-IN
389-662 RC SAMPLE COUNT FAULT-B-OUT
389-663 RC SAMPLE COUNT FAULT-A1-IN
389-665 RC SAMPLE COUNT FAULT-A1-OUT
389-666 TMA LED FAULT-IN
389-667 TMA LED FAULT-OUT
389-668 TMA TH FAULT-IN
389-669 TMA TH FAULT-OUT

NOTE:
1. CCC [389-001 = (IN &OUT)
2. ANALOG MONITOR [092-200] ~ [092-203] DISPLAYS MOB/ADC SENSORS A/D VALUE. NORMAL RANGE: 0-1023
3. ANALOG MONITOR [092-204] DISPLAYS ENVIRONMENT SENSOR HUMIDITY A/D VALUE. NORMAL RANGE: 140-896
4. ANALOG MONITOR [092-205] DISPLAYS ENVIRONMENT SENSOR TEMPERATURE A/D VALUE. NORMAL RANGE: 30 TO 639
TD 1. MCU PWB J417-A3 (+) TO GND (-)
MCU PWB J417-A12 (+) TO GND (-)
LED ON: APPROX. +3.8VDC
LED OFF: APPROX. +4VDC

ELECTRICAL COMPONENTS

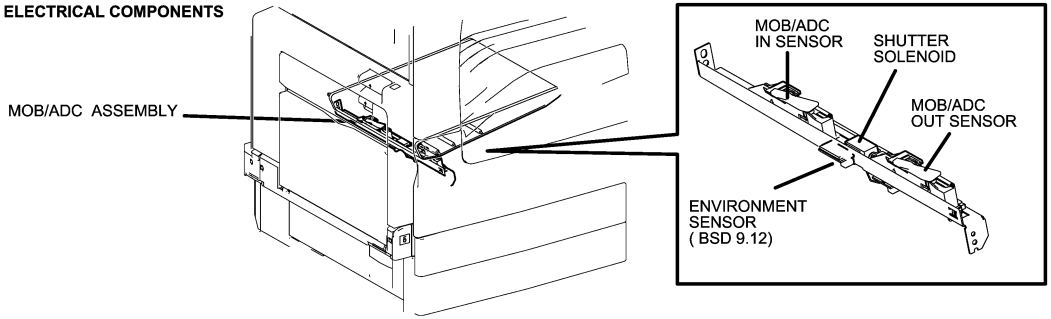

Figure 13 BSD 9.13 - Color Registration Control

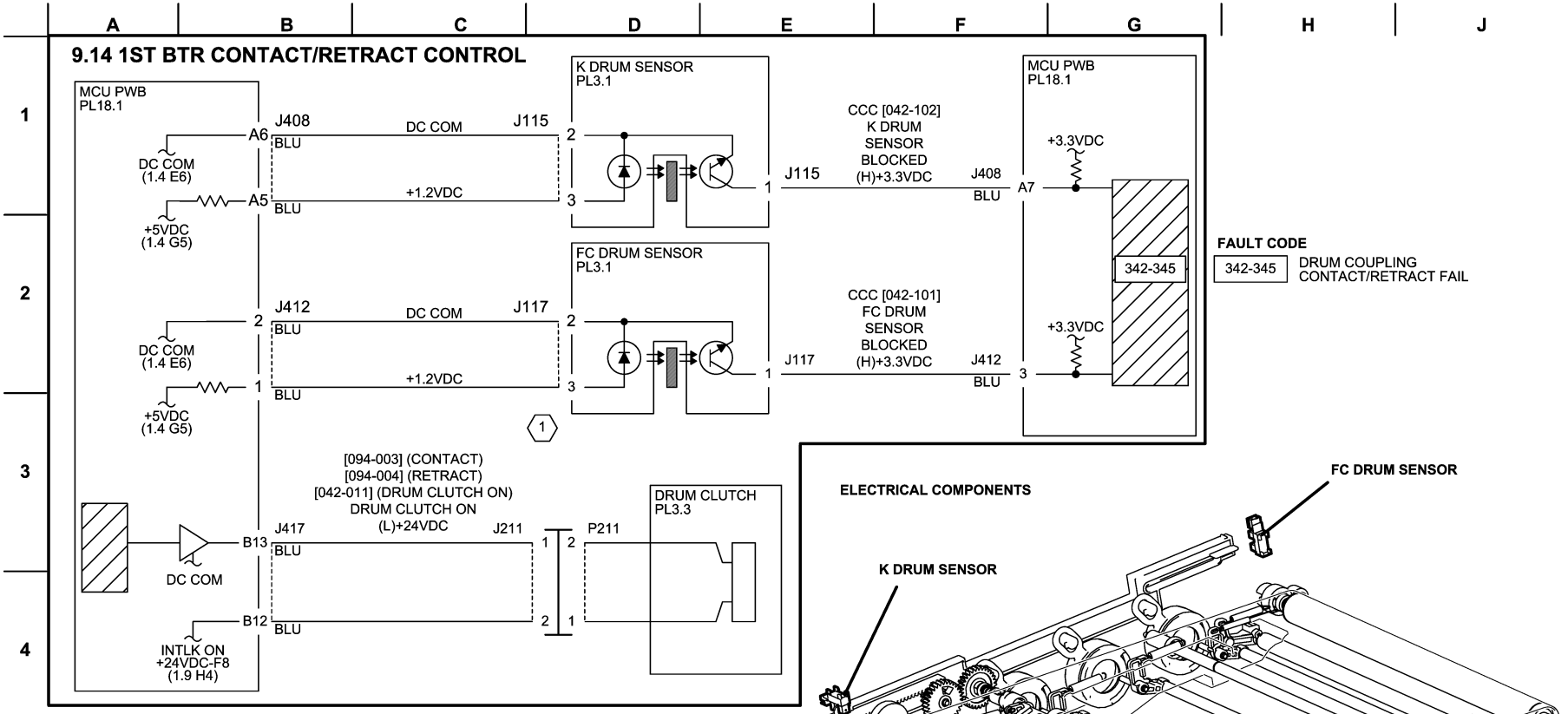

NOTE:

1

COMPONENT CONTROL CODE	OPERATION
[094-003]	"CONTACT" TURNS ON MAIN MOTOR AT A SPEED OF 63MM/S TO TURN ON DRUM CLUTCH. DETECTS THE CONTACT POSITION WITH DRUM SENSOR AND THEN STOPS MAIN MOTOR AND DRUM CLUTCH.
[094-004]	"RETRACT" TURNS ON MAIN MOTOR AT A SPEED OF 63MM/S TO TURN ON DRUM CLUTCH. DETECTS THE RETRACT POSITION WITH DRUM SENSOR AND THEN STOPS MAIN MOTOR AND DRUM CLUTCH.

Figure 14 BSD 9.14 - 1ST BTR Contact Retract Control

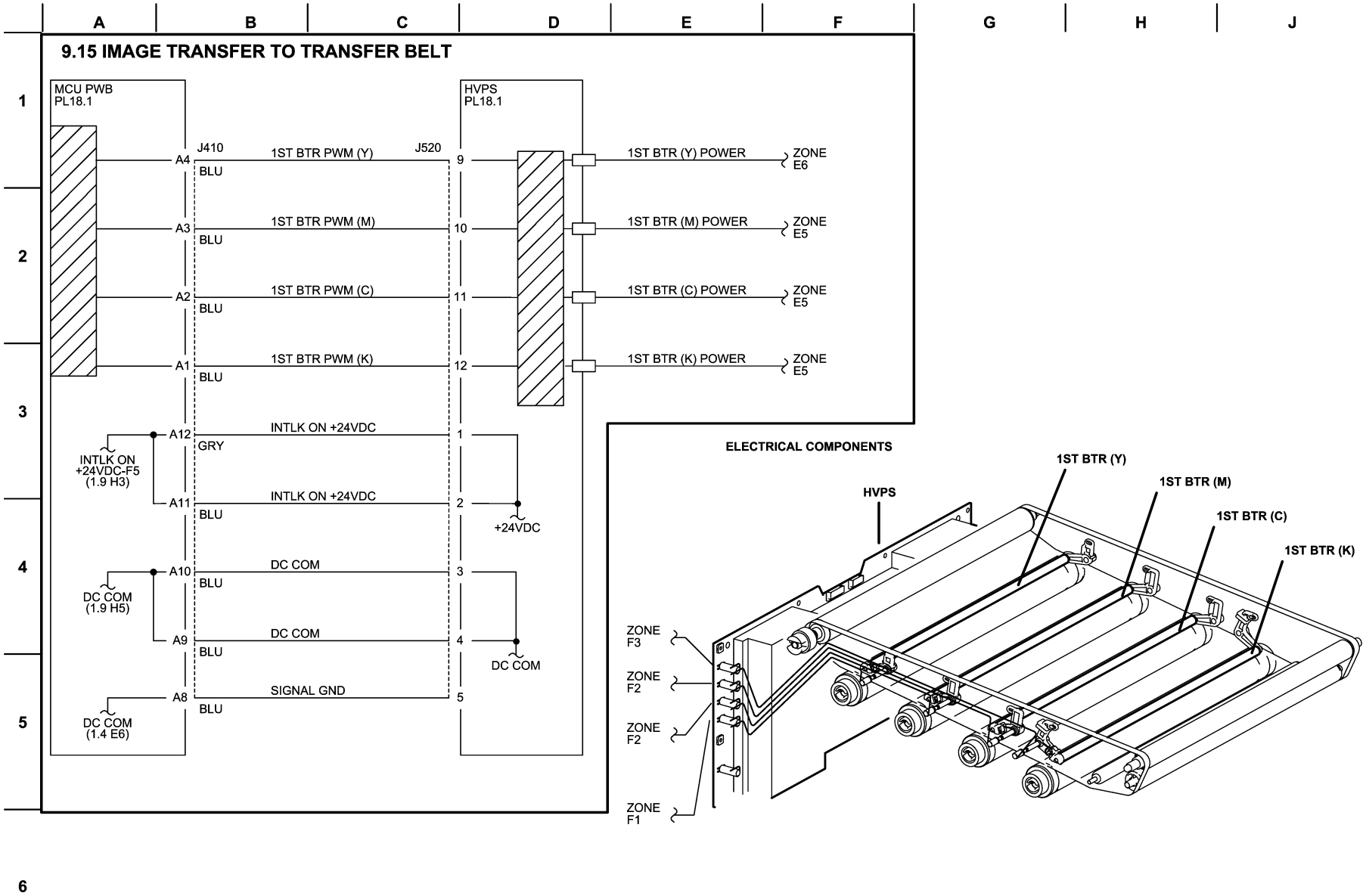

Figure 15 BSD 9.15 - Image Transfer to Transfer Belt

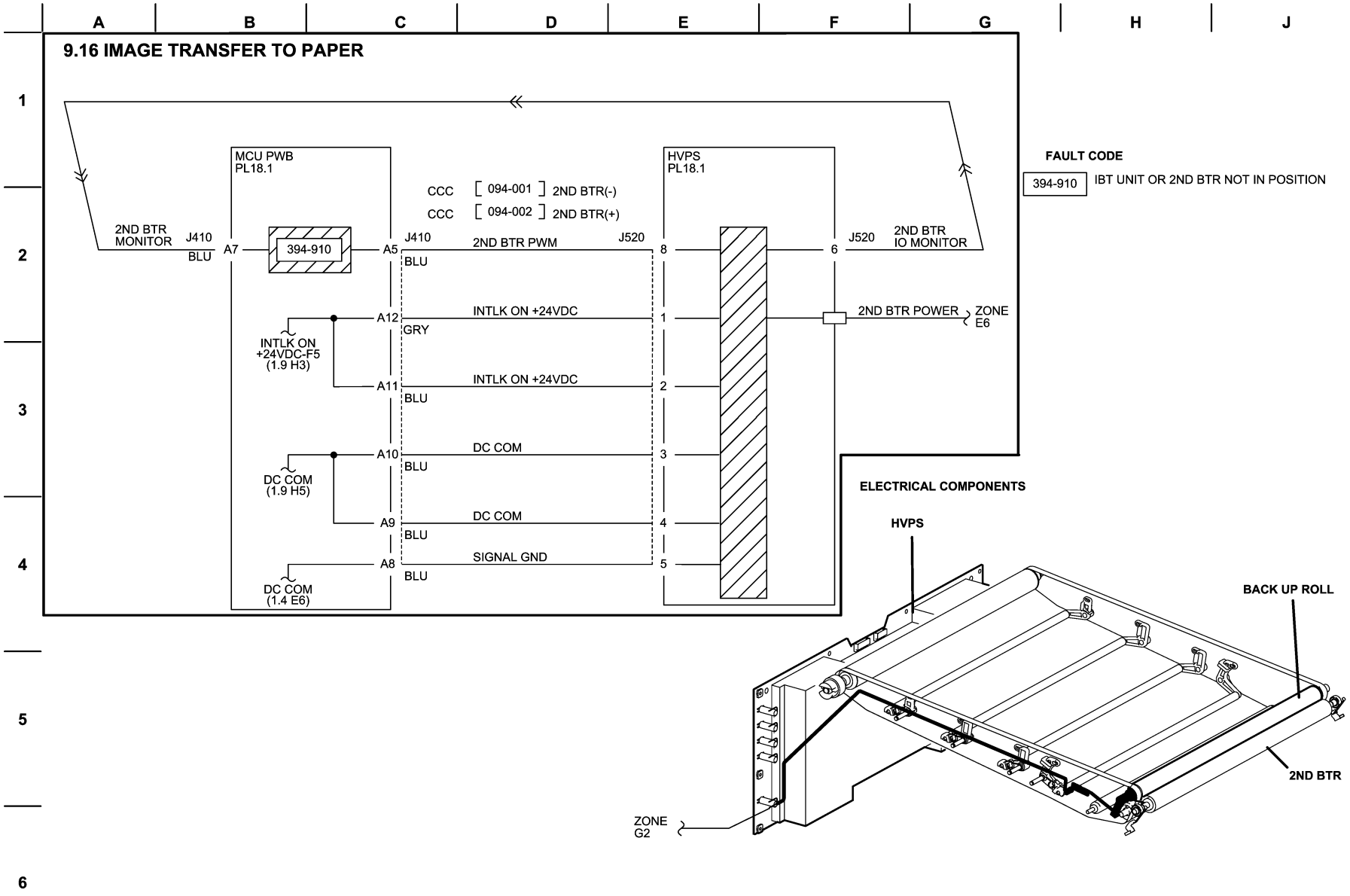

Figure 16 BSD 9.16 - Image Transfer to Paper

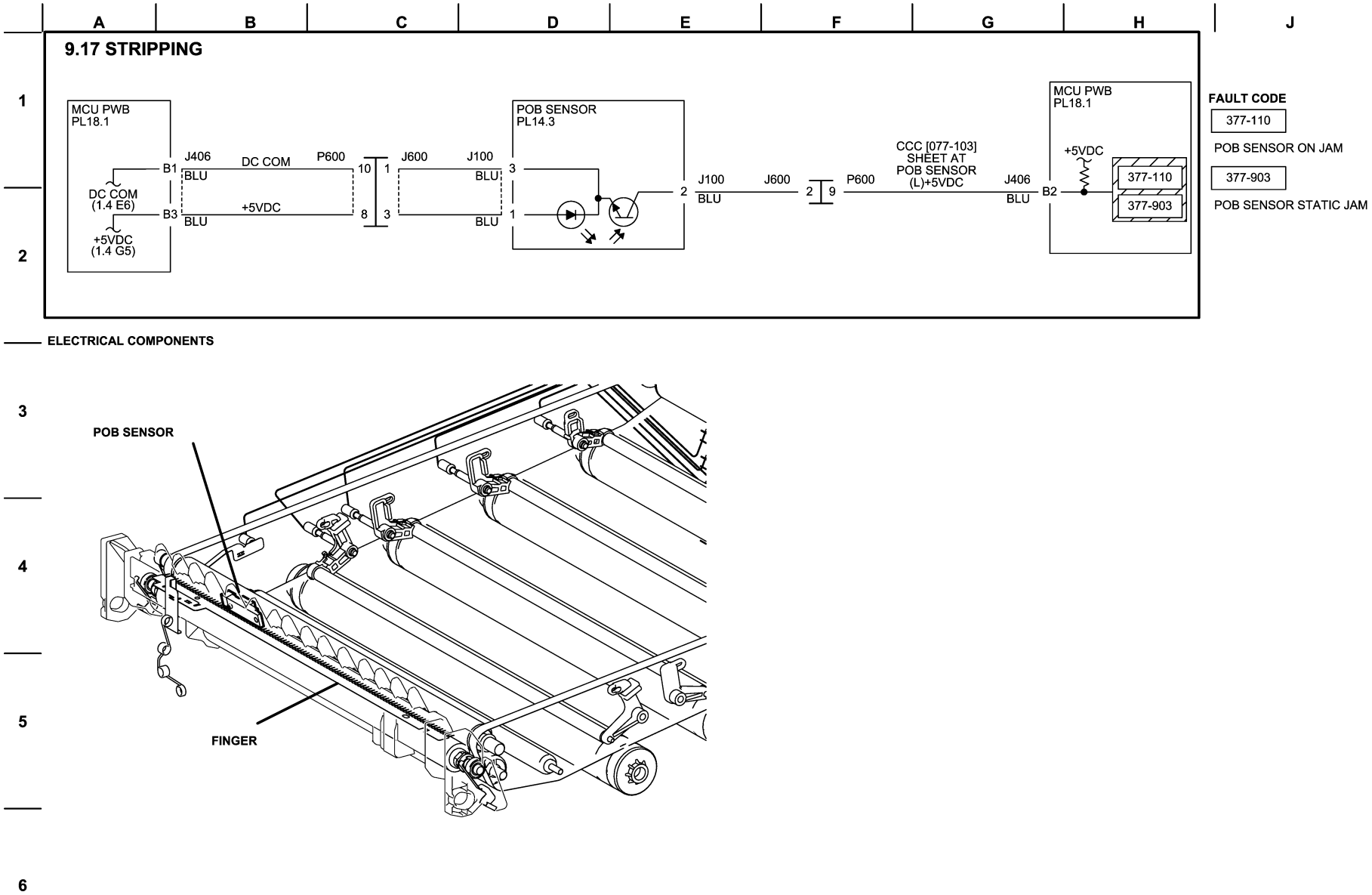

Figure 17 BSD 9.17 - Stripping

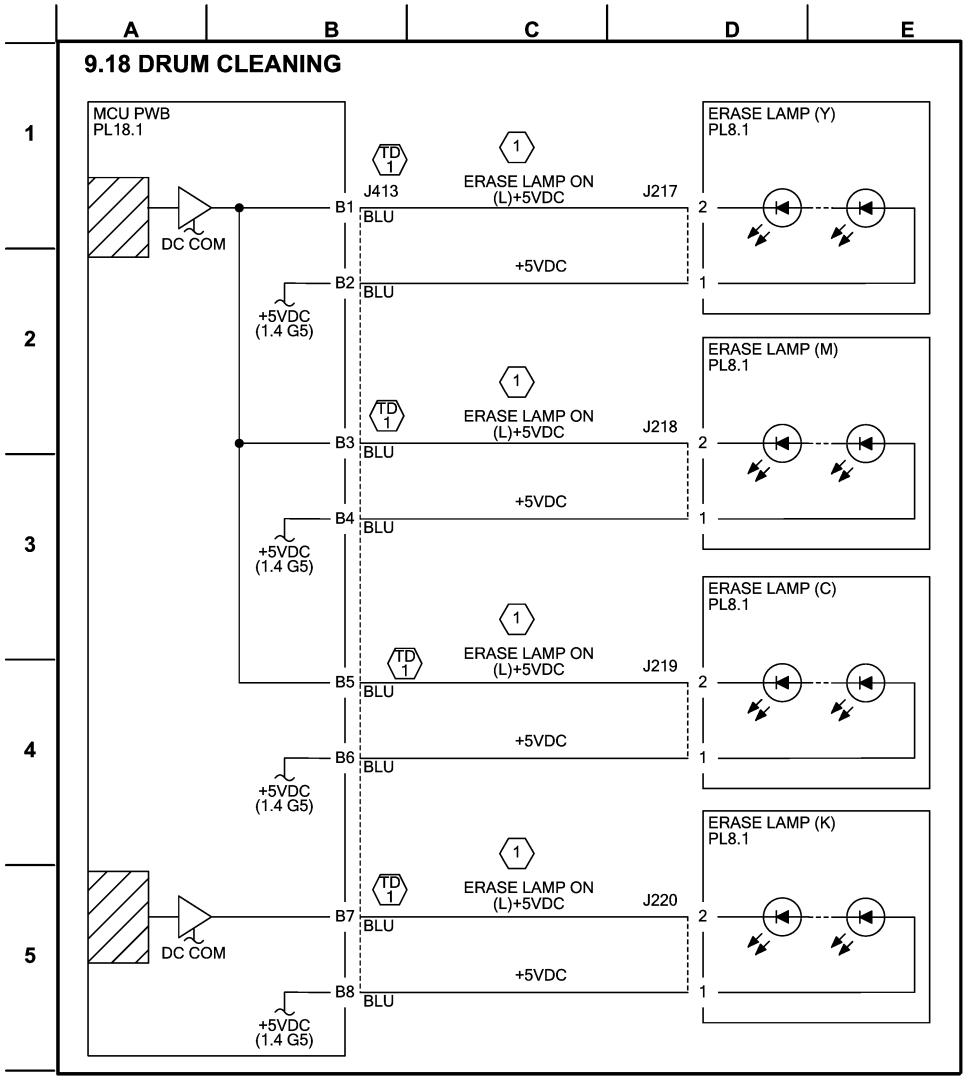

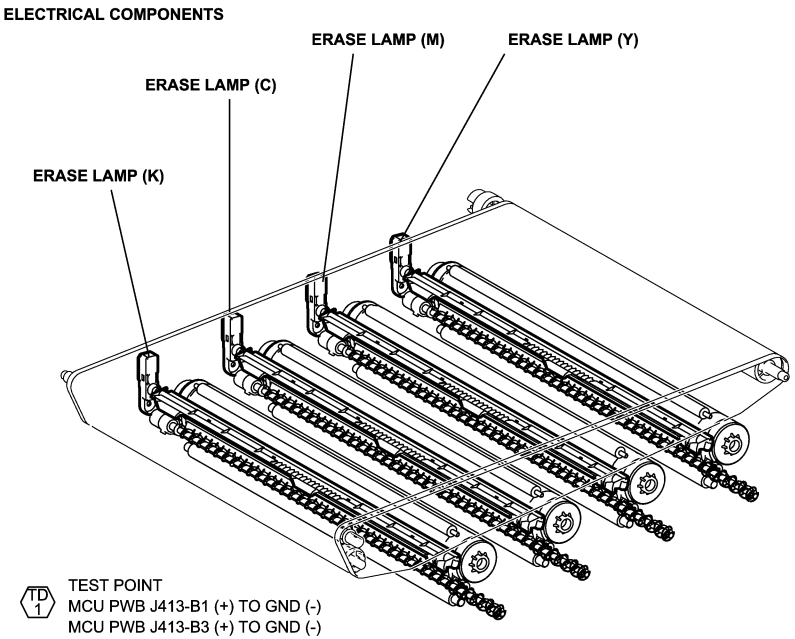

NOTE: 1

COMPONENT CONTROL CODE	OPERATION
[091-005]	TURNS ON YELLOW, MAGENTA, & CYAN ERASE LAMPS.
[091-006]	TURNS ON BLACK (K) ERASE LAMP.
[091-006]	TURNS ON ALL ERASE LAMPS.

Figure 18 BSD 9.18 - Drum Cleaning

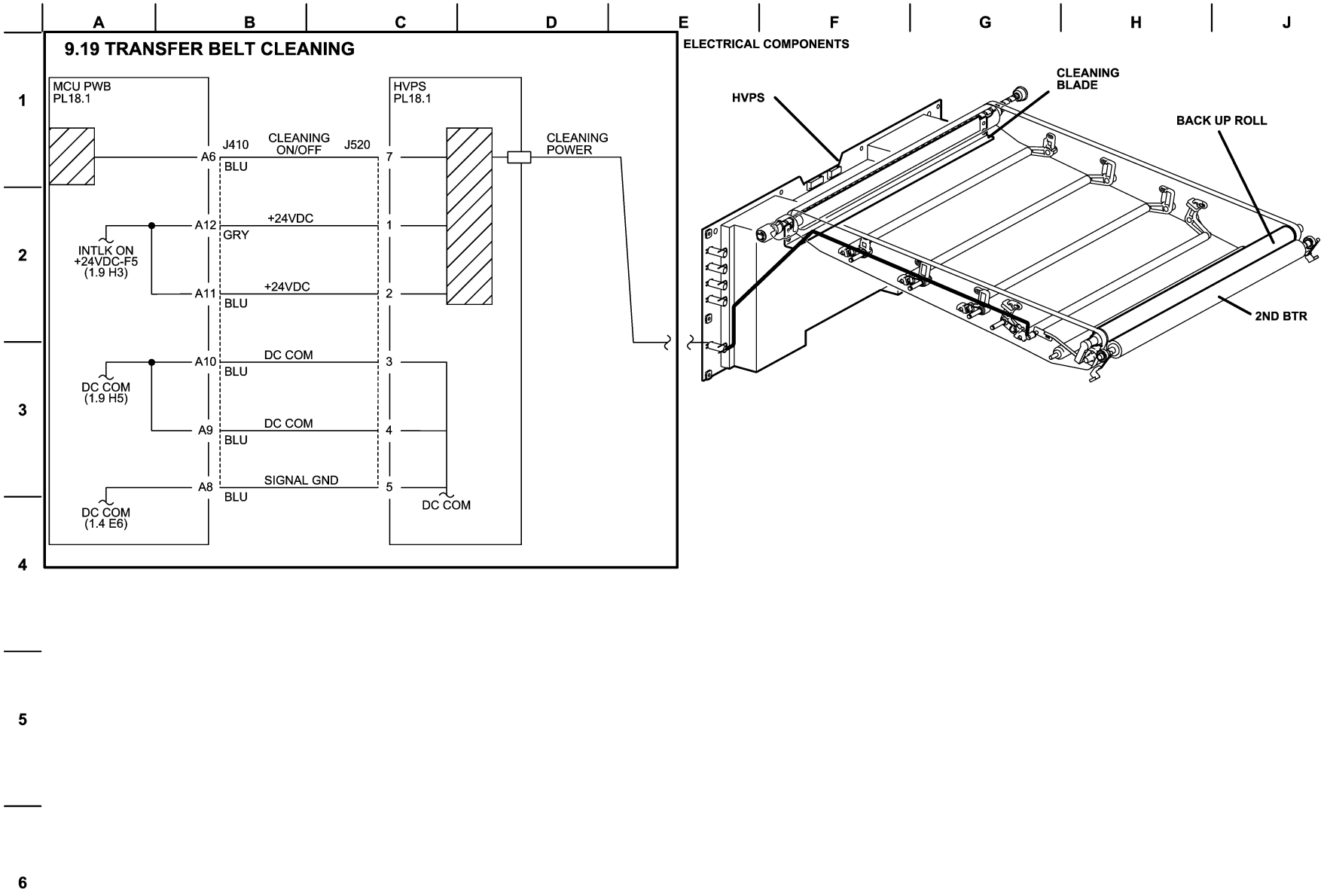

Figure 19 BSD 9.19 - Transfer Belt Cleaning

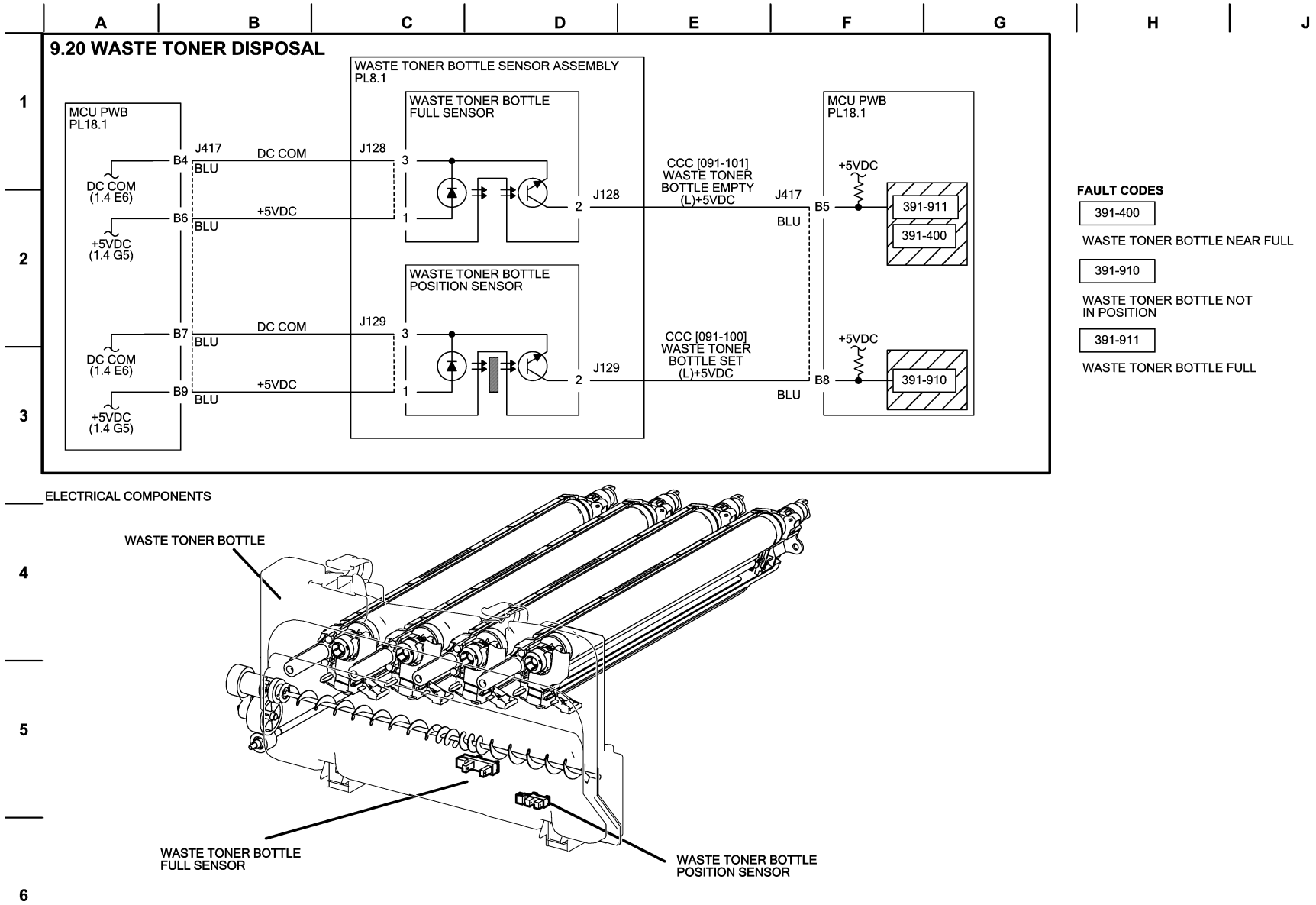

Figure 20 BSD 9.20 - Waste Toner Disposal

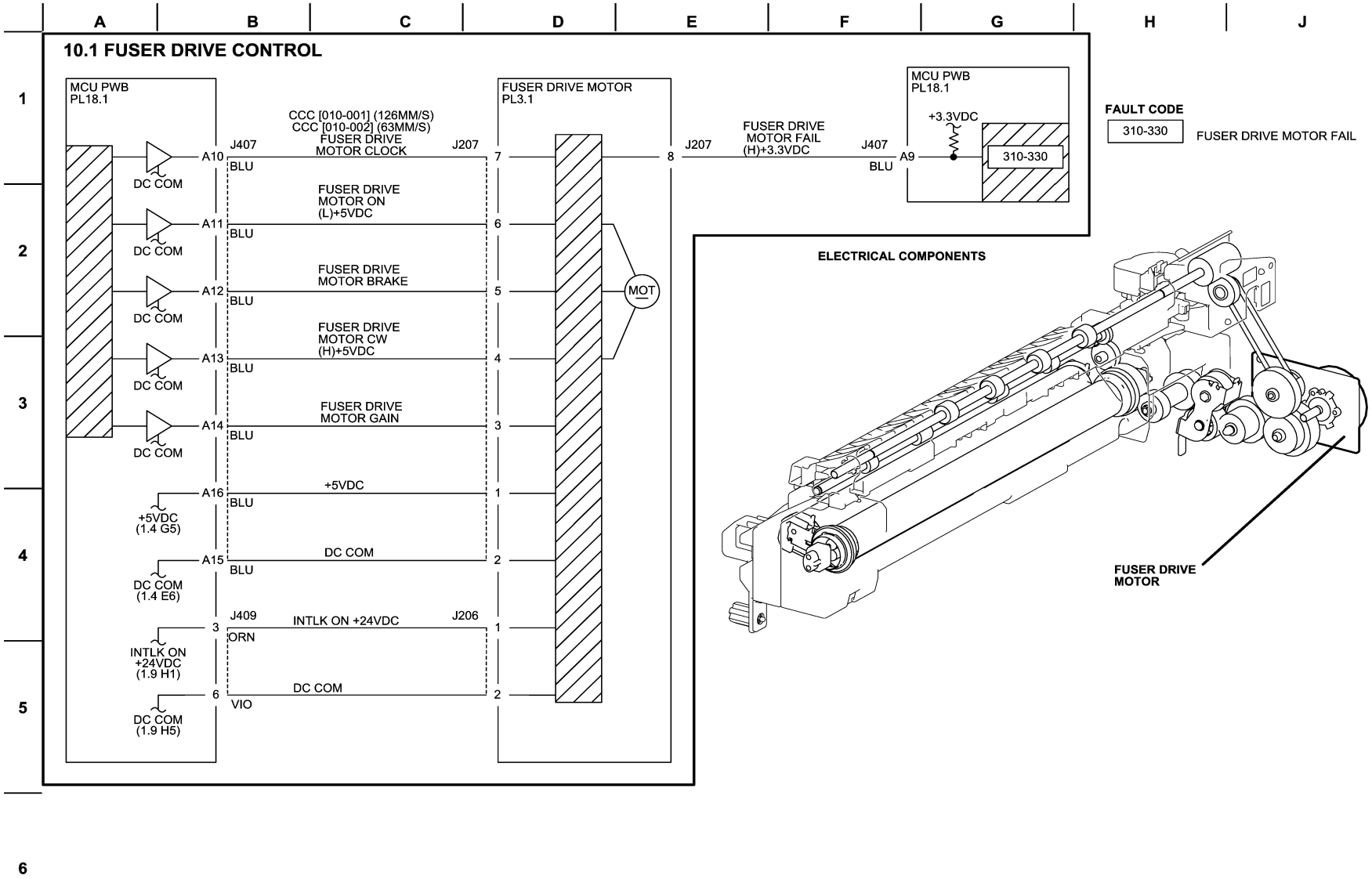

Figure 1 BSD 10.1 - Fuser Drive Control

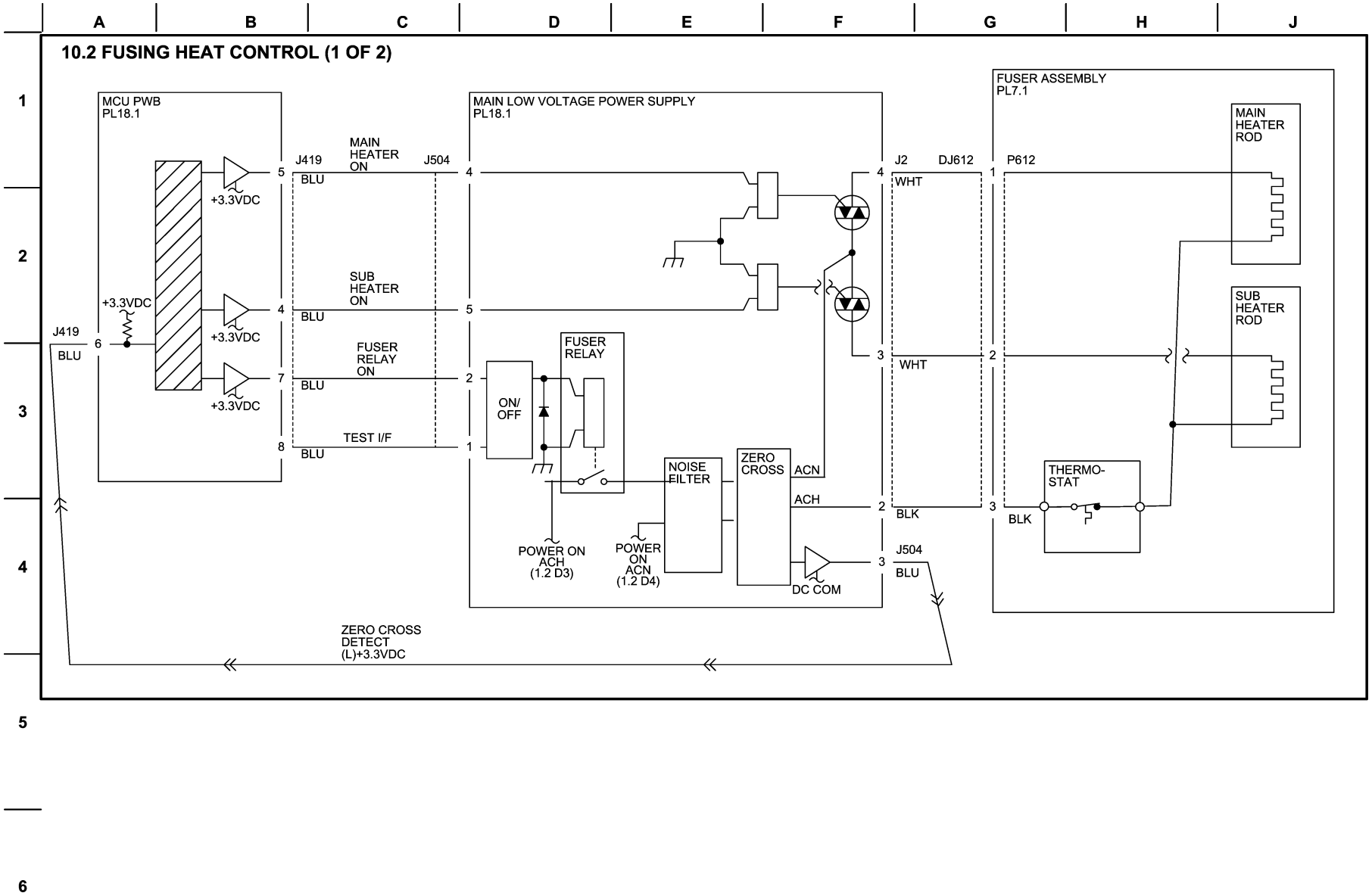

Figure 2 BSD 10.2 - Fusing Heat Control (1 of 2)

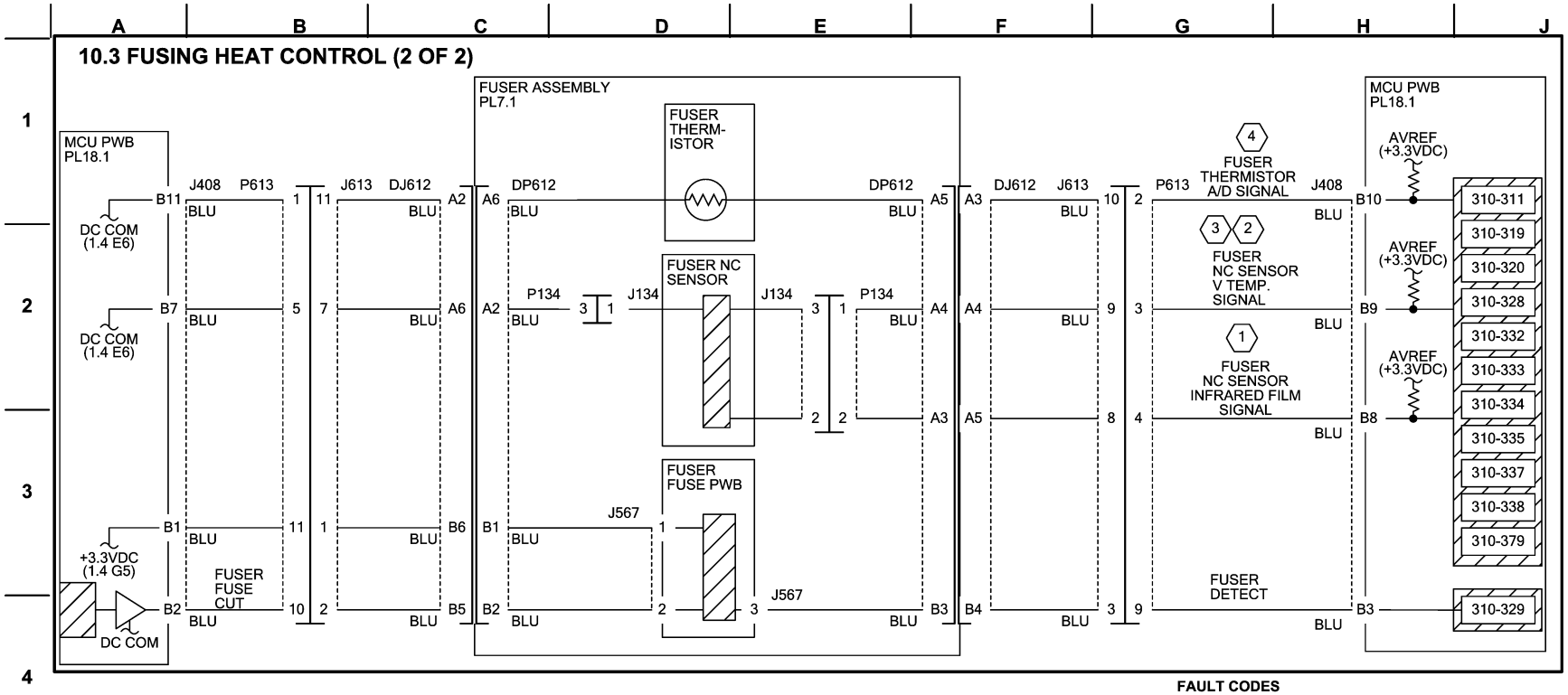

NOTE:

1. ANALOG MONITOR [010-200] DISPLAYS AD VALUE DETECTED BY FUSER NC SENSOR.
   NORMAL RANGE = 1019 (LOW TEMP) TO 150 (HIGH TEMP)
   DISCONNECTION = VALUE OF 1020 OR MORE IS DETECTED 10 OR MORE CONSECUTIVE TIMES, **AND** THERMISTOR = 20 DEG. C.
   OUT OF OUTPUT TABLE = VALUE OF BELOW 150 IS DETECTED 10 OR MORE CONSECUTIVE TIMES.

2. ANALOG MONITOR[010-201] DISPLAYS FUSER NC SENSOR COMPENSATION VALUE.
   NORMAL RANGE =1019 (LOW TEMP) TO 130 (HIGH TEMP)
   DISCONNECTION = VALUE OF 1020 OR MORE IS DETECTED 10 OR MORE CONSECUTIVE TIMES, **AND** THERMISTOR = 20 DEG. C.
   OUT OF OUTPUT TABLE = VALUE OF BELOW 130 IS DETECTED 10 OR MORE CONSECUTIVE TIMES.

3. ANALOG MONITOR [010-202] DISPLAYS FUSER NC SENSOR DIFFERENCE VALUE ((COMP. VALUE - DETECTED VALUE) X 14.333).
   NORMAL RANGE = -32 (LOW TEMP) TO 1024 (HIGH TEMP)
   DIFFERENCE AMPLIFIED ERROR:
   5 X (COM. AD - DETECTED AD)=/>DIFFERENCE AD VALUE ([COM. AD - DETECTED AD=/<16]: OUT OF DETECTION RANGE)

4. ANALOG MONITOR [010-203] DISPLAYS FUSER THERMISTOR TEMPERATURE VALUE.
   NORMAL RANGE = 1018 (LOW TEMP) TO 120 (HIGH TEMP)
   HIGH TEMP ERROR = 122 OR LESS IS DETECTED 3 OR MORE CONSECUTIVE TIMES.

FAULT CODES

310-311	STS DISCONNECTION
310-319	NC SENSOR DIFFERENTIAL AMP FAIL
310-320	STS OVER TEMPERATURE
310-328	WARM UP TIME FAIL
310-329	FUSER FUSE CUT FAIL
310-332	NC SENSOR DISCONNECTION
310-333	NC SENSOR OVER TEMPERATURE
310-334	NC SENSOR BROKEN
310-335	NC SENSOR OUT OF RANGE
310-337	HEAT ROLL PAPER WRAP DETECTED
310-338	FUSER ON TIME FAIL
310-379	FUSER NOT READY RETURN TIME

Figure 3 BSD 10.3 - Fusing Heat Control (2 of 2)

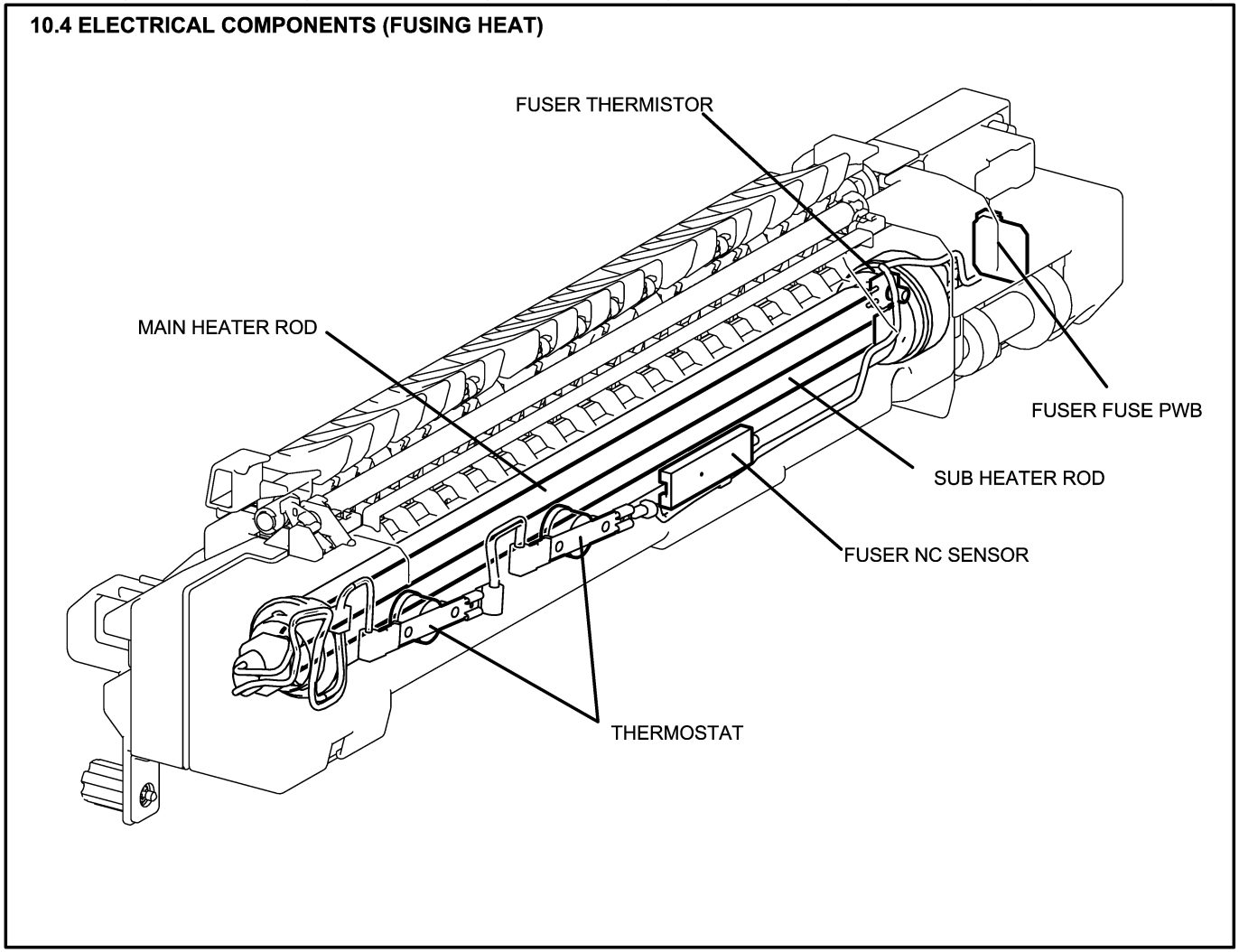

Figure 4 BSD 10.4 - Electrical Components (Fusing Heat)

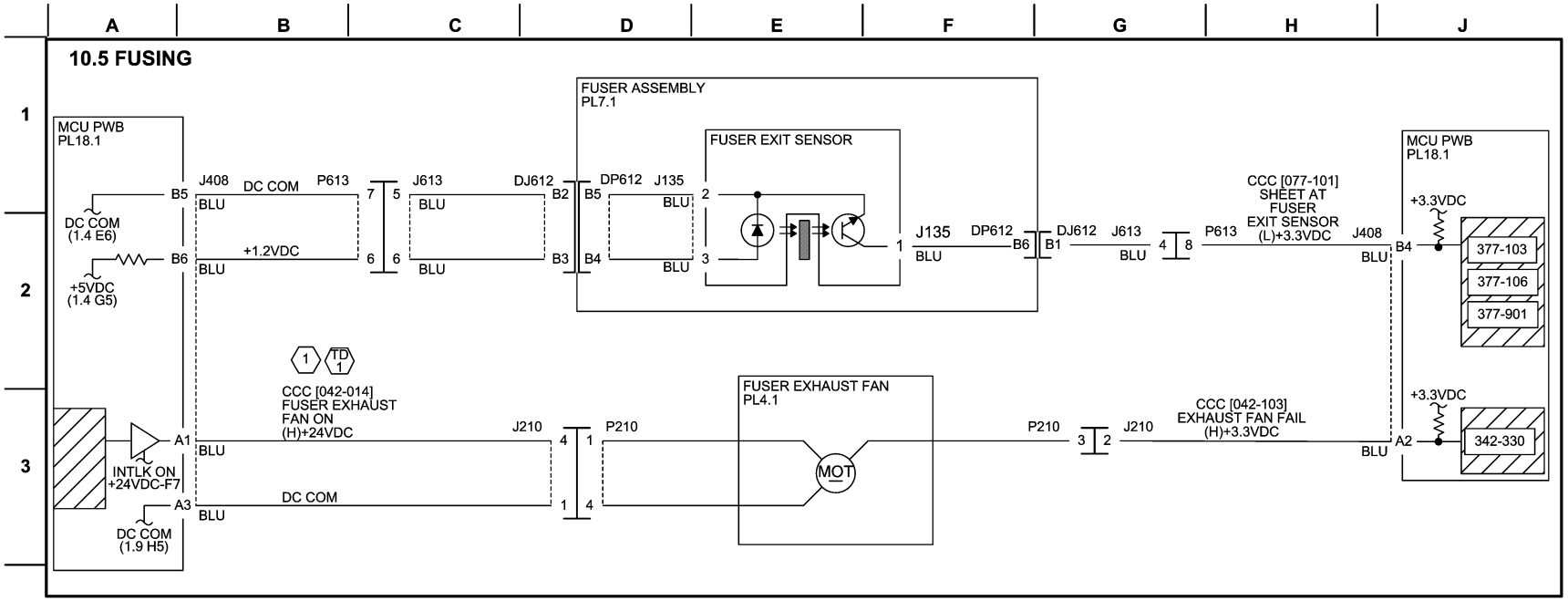

NOTE: (1) TURNING ON CCC [042-004] MAKES THE FAN ROTATE AT HIGH SPEED.
TURNING IT OFF MAKES IT ROTATE AT LOW SPEED.
AFTER THE FAN ROTATES AT LOW SPEED,
THIS DIAG DOES NOT MAKE IT STOP UNTIL POWER OFF.

(TD 1) TEST POINT
MCU PWB J408-A1 (+) TO GND
DC330[042-014] ON HIGH SPEED ROTATION: APPROX. +24VDC
DC330[042-014] OFF LOW SPEED ROTATION: APPROX. +14.8VDC

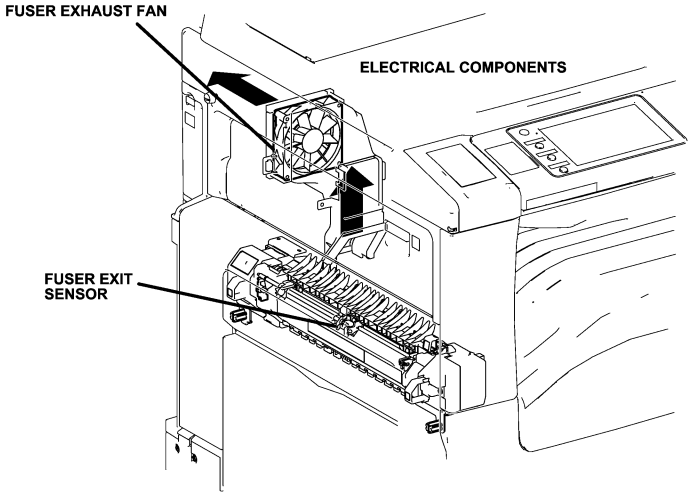

FAULT CODES

342-330	FUSER EXHAUST FAN FAIL
377-103	EXIT SENSOR1 OFF JAM
377-106	EXIT SENSOR1 ON JAM
377-901	EXIT SENSOR1 STATIC JAM

Figure 5 BSD 10.5 - Fusing

10.6 FUSED PAPER EXIT 1 OCT CONTROL

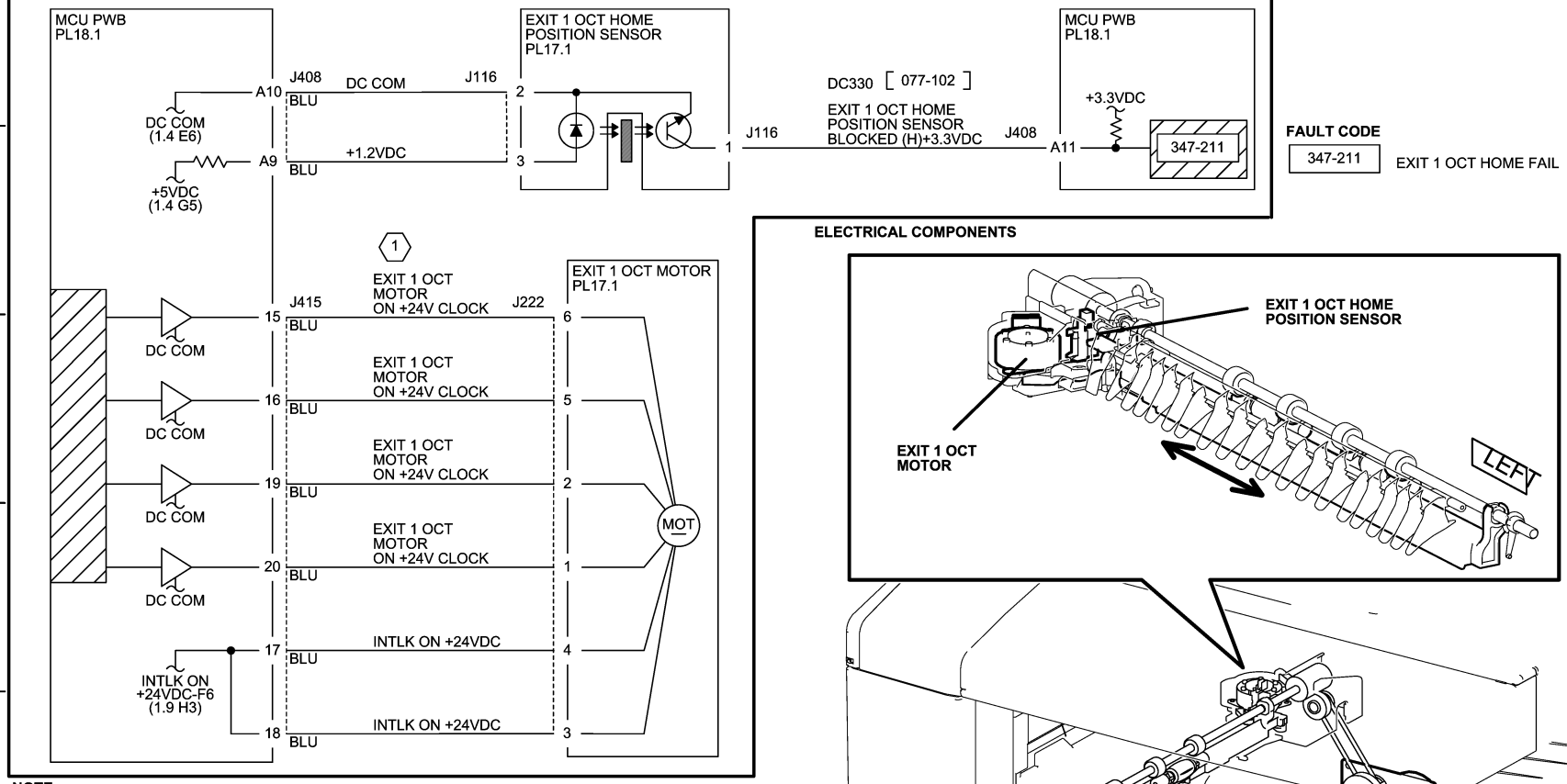

NOTE:

1

COMPONENT CONTROL CODE	OPERATION
[077-010]	ROTATES THE MOTOR FORWARD TO MOVE EXIT ROLL TO THE FRONT (2-PHASE EXCITATION)
[077-011]	ROTATES THE MOTOR REVERSE TO MOVE EXIT ROLL TO THE REAR (2-PHASE EXCITATION)
[077-012]	ROTATES THE MOTOR FORWARD TO MOVE EXIT ROLL TO THE FRONT (1-2-PHASE EXCITATION)
[077-013]	ROTATES THE MOTOR REVERSE TO MOVE EXIT ROLL TO THE REAR (1-2-PHASE EXCITATION)

Figure 6 BSD 10.6 - Fused Paper Exit 1 OCT Control

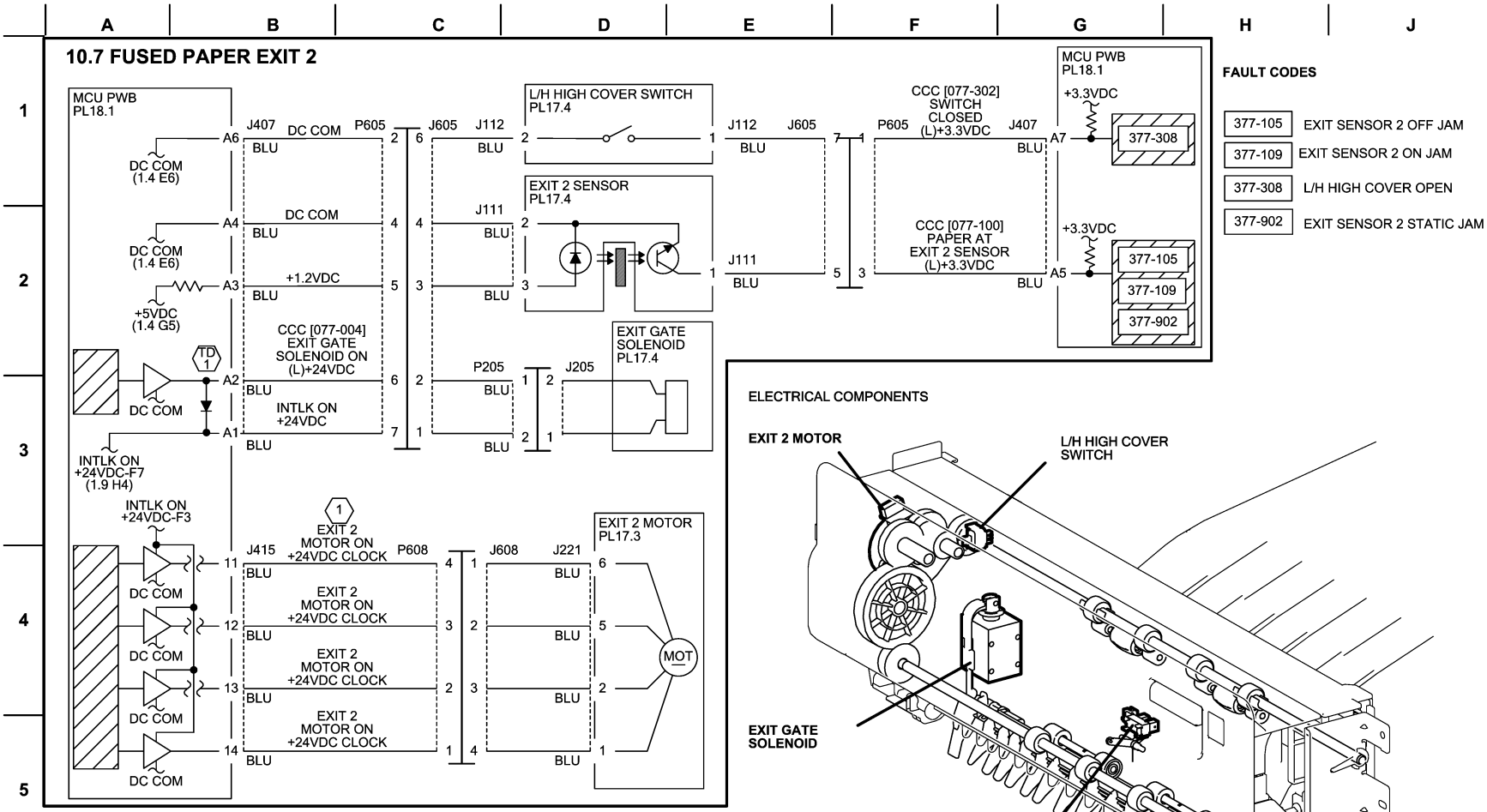

NOTE: (1)

COMP CTL CODE	OPERATION
[077-014]	ROTATES MOTOR FORWARD (OUTPUT DIRECTION – 63MM/SEC)
[077-015]	ROTATES MOTOR FORWARD (OUTPUT DIRECTION – 126MM/SEC)
[077-016]	ROTATES MOTOR REVERSE (PULL-IN DIRECTION – 63MM/SEC)
[077-017]	ROTATES MOTOR REVERSE (PULL-IN DIRECTION – 126MM/SEC)

(TD 1) TEST POINT
MCU PWB J407-A2 (+) TO GND
[077-004] ON : APPROX. +11VDC
[077-004] OFF: APPROX. +24VDC

Figure 7 BSD 10.7 - Fused Paper Exit 2

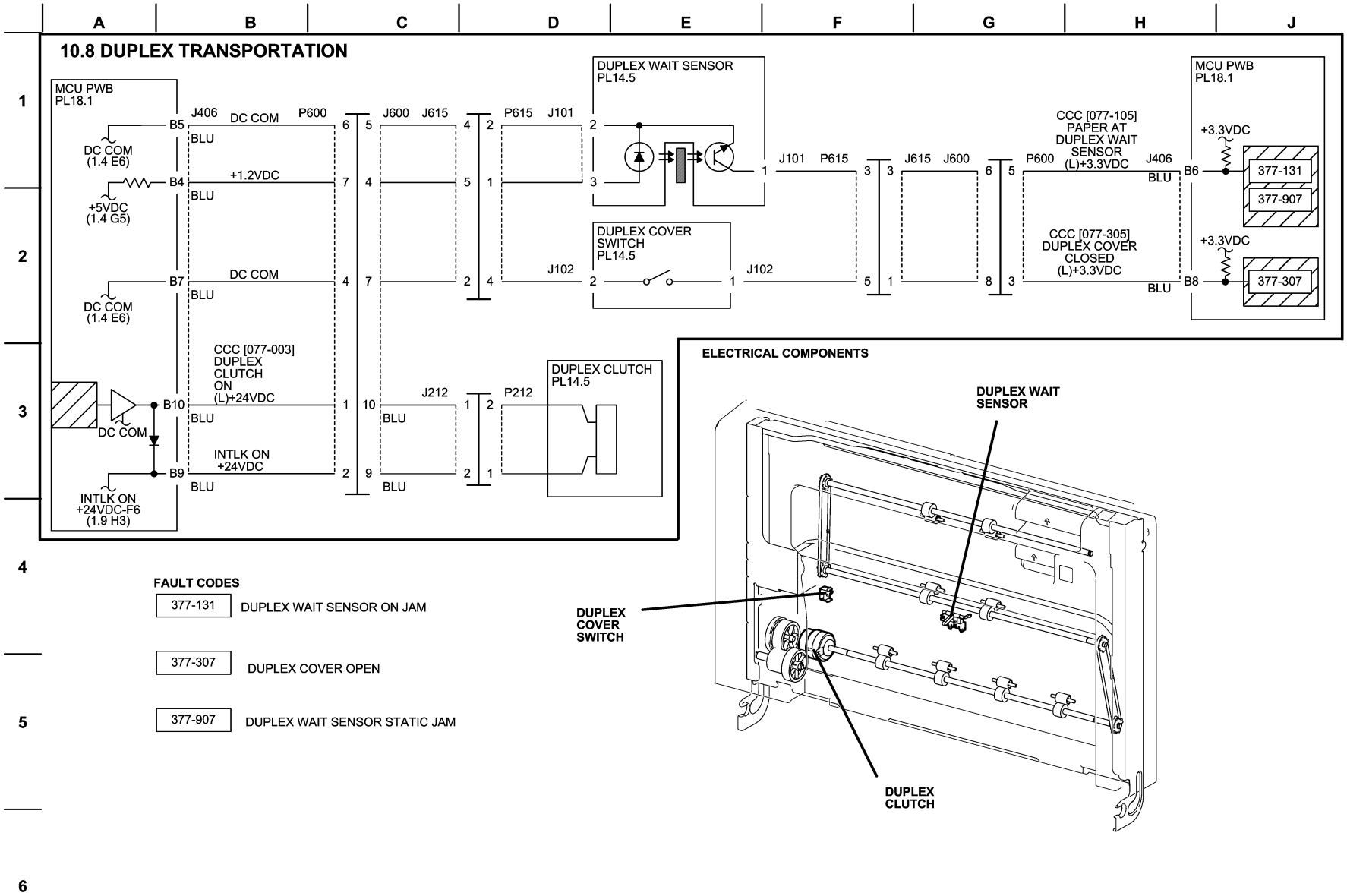

Figure 8 BSD 10.8 - Duplex Transportation

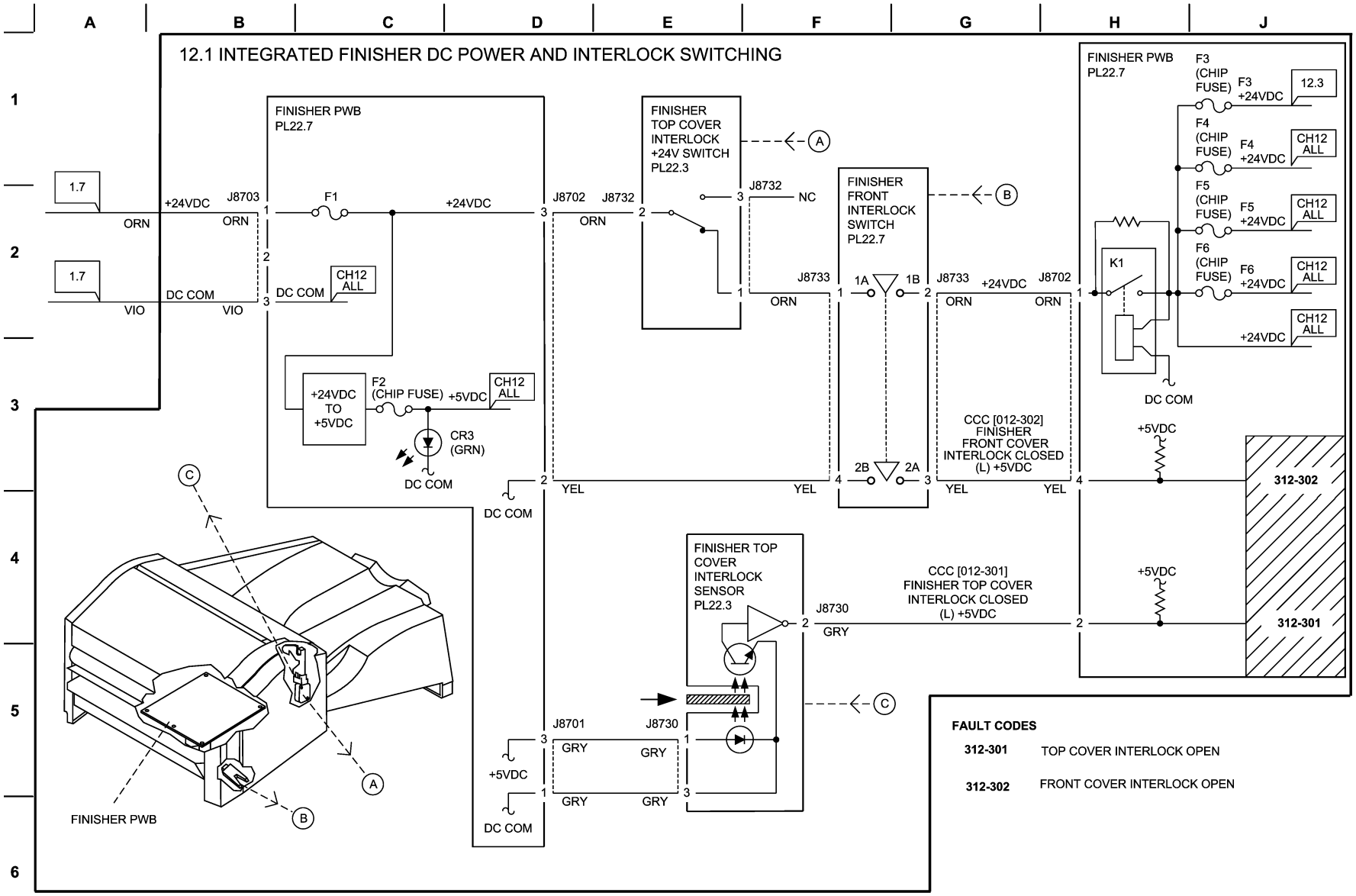

Figure 1 BSD 12.1 Integrated Finisher DC Power and Interlock Switching

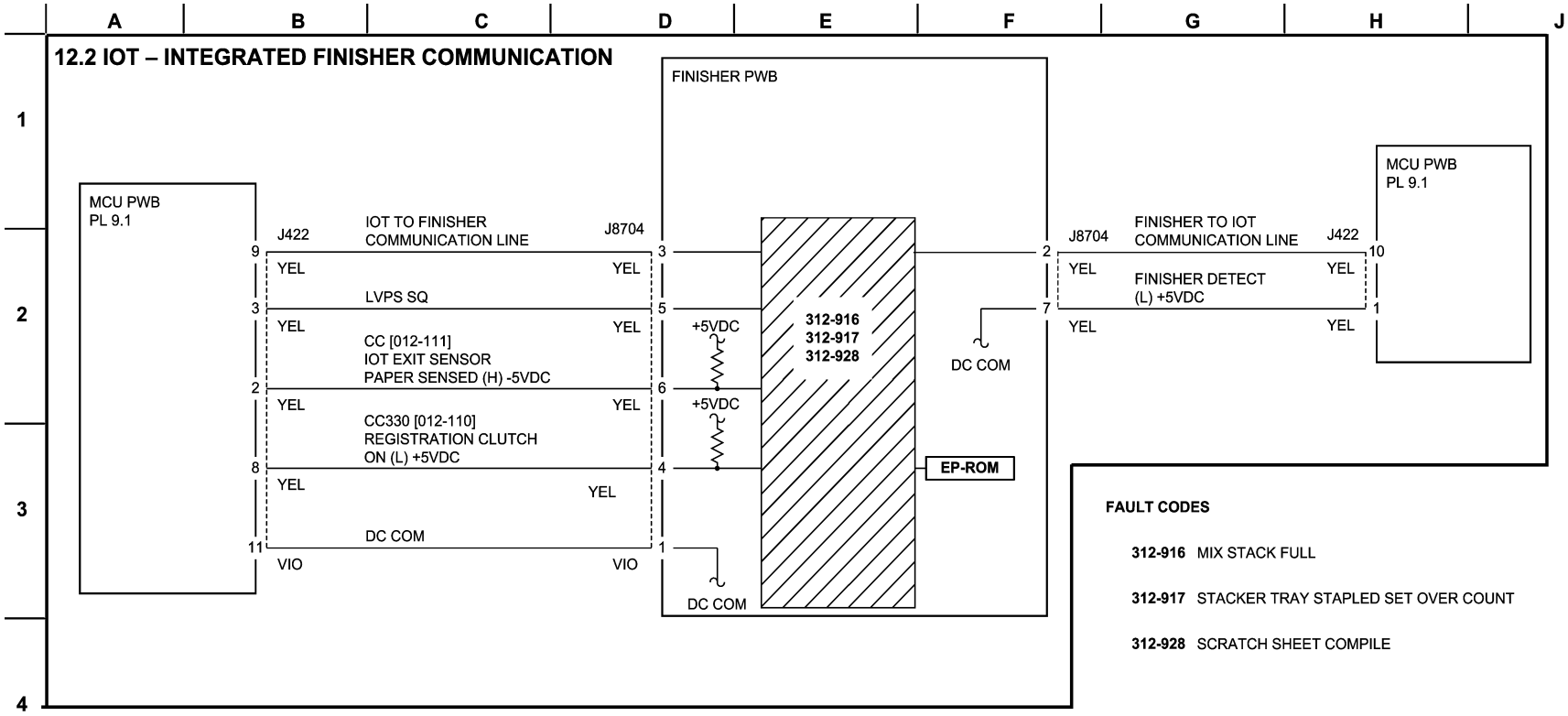

Figure 2 BSD 12.2 IOT - Integrated Finisher Communication

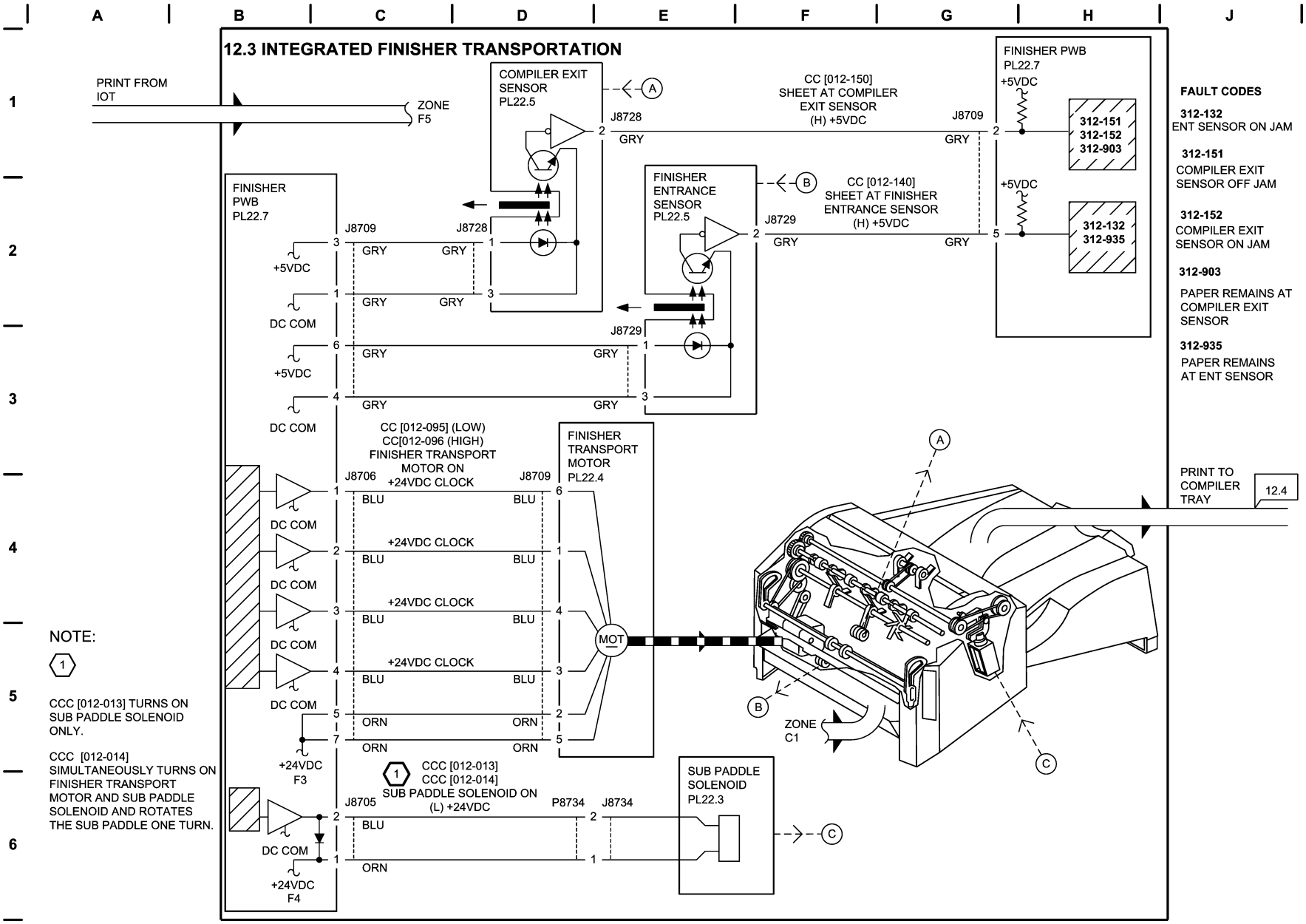

Figure 3 BSD 12.3 Integrated Finisher Transportation

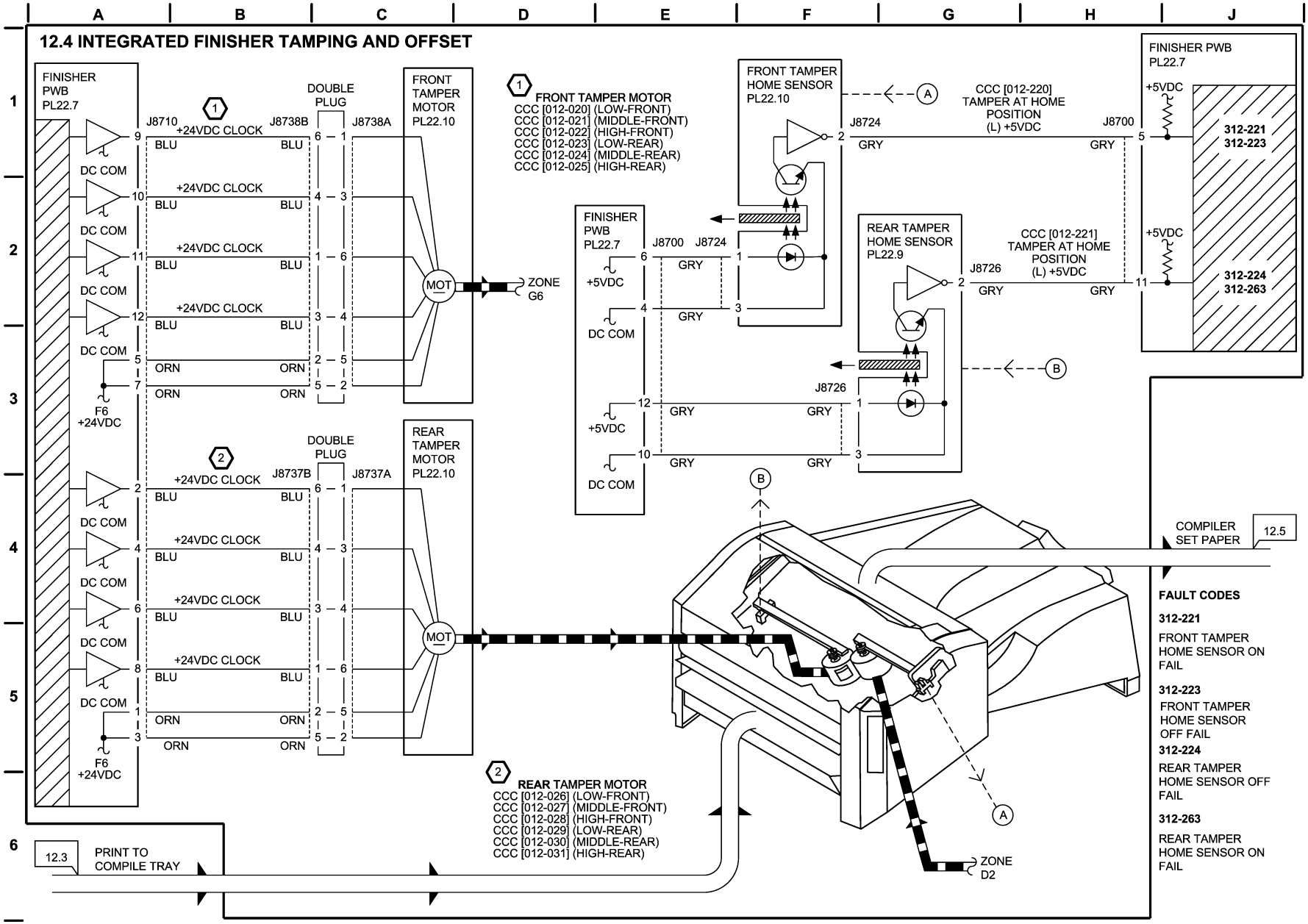

Figure 4 BSD 12.4 Integrated Finisher Tamping and Offset

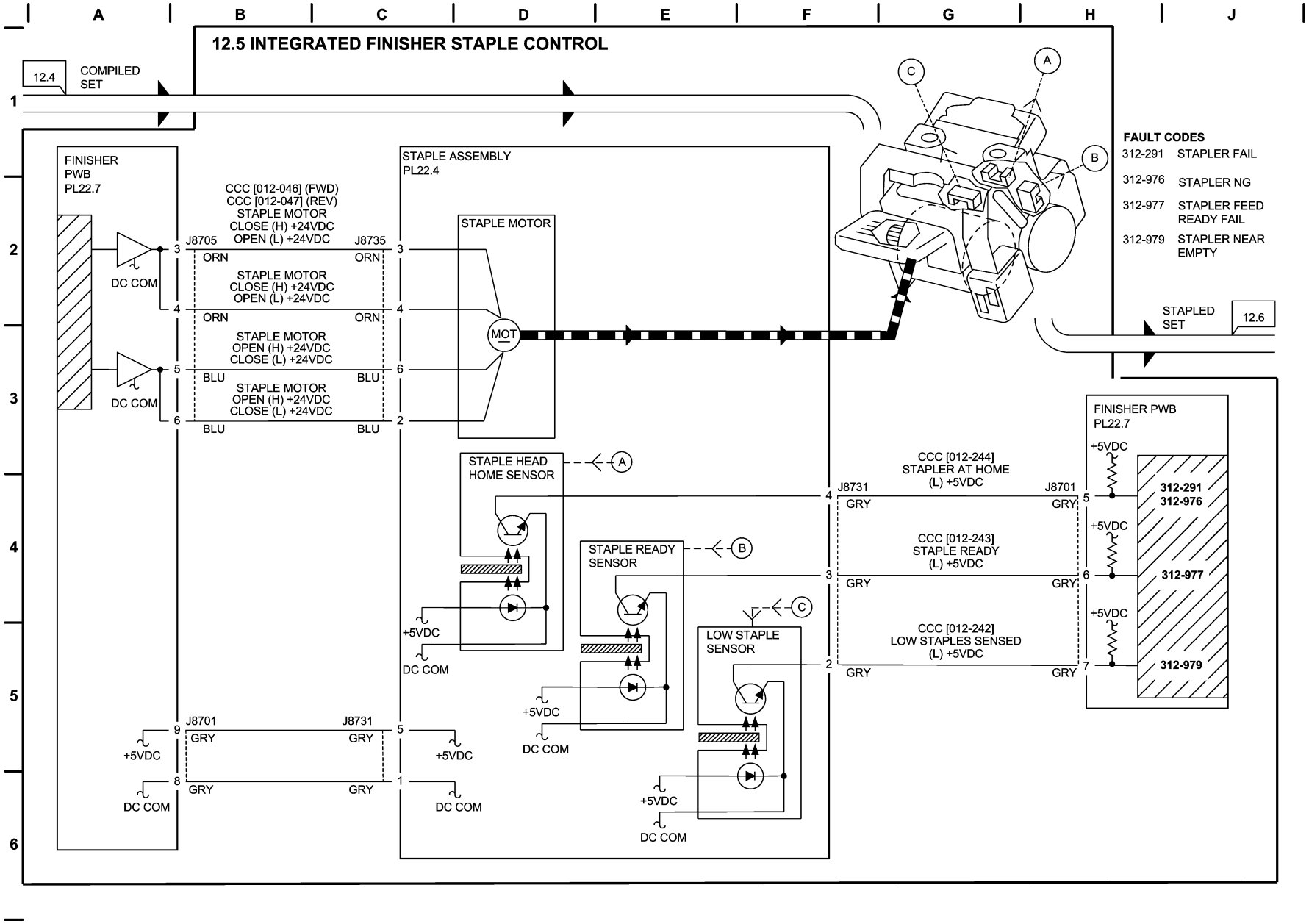

Figure 5 BSD 12.5 Integrated Finisher Staple Control

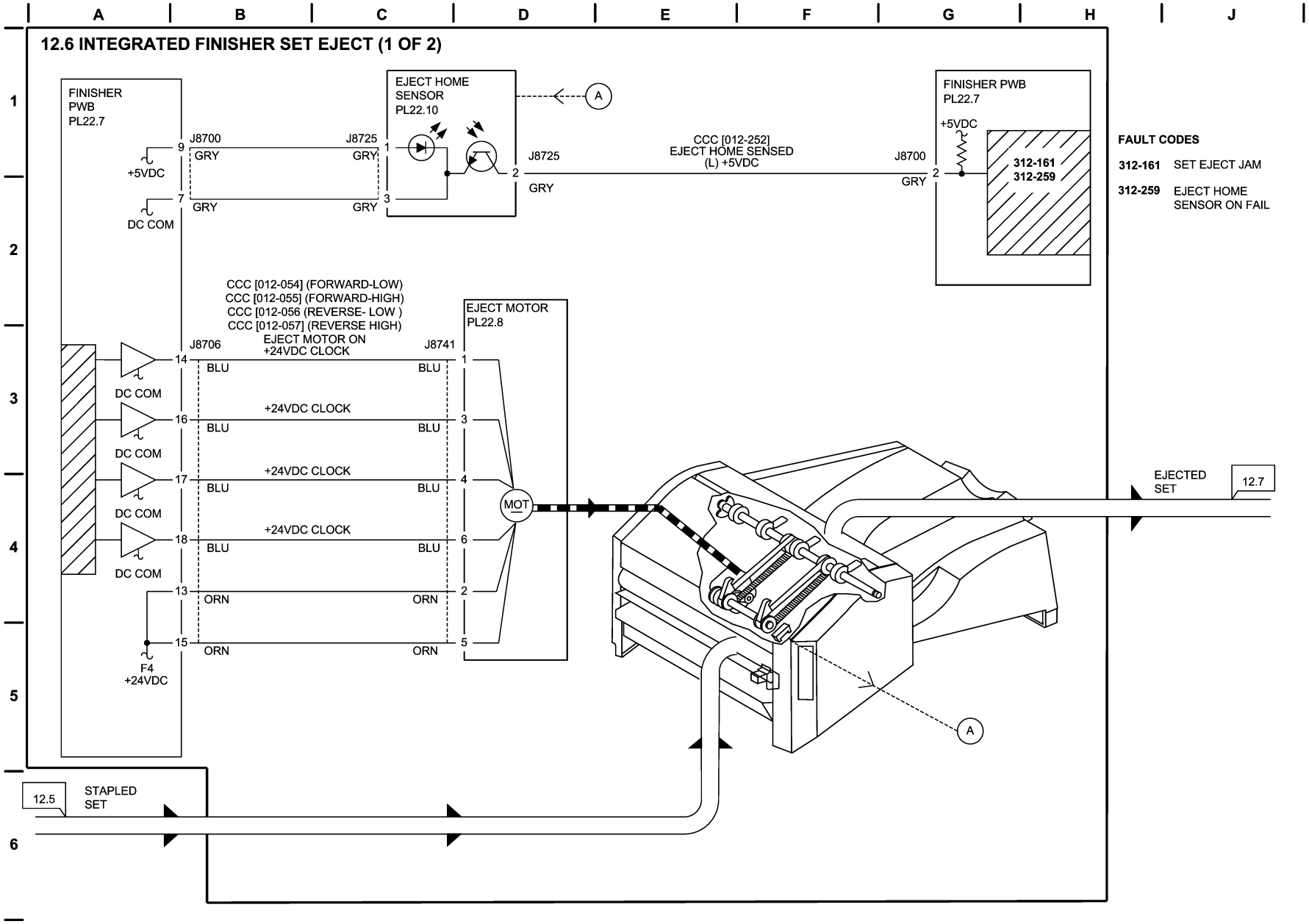

Figure 6 BSD 12.6 Integrated Finisher Set Eject (1 of 2)

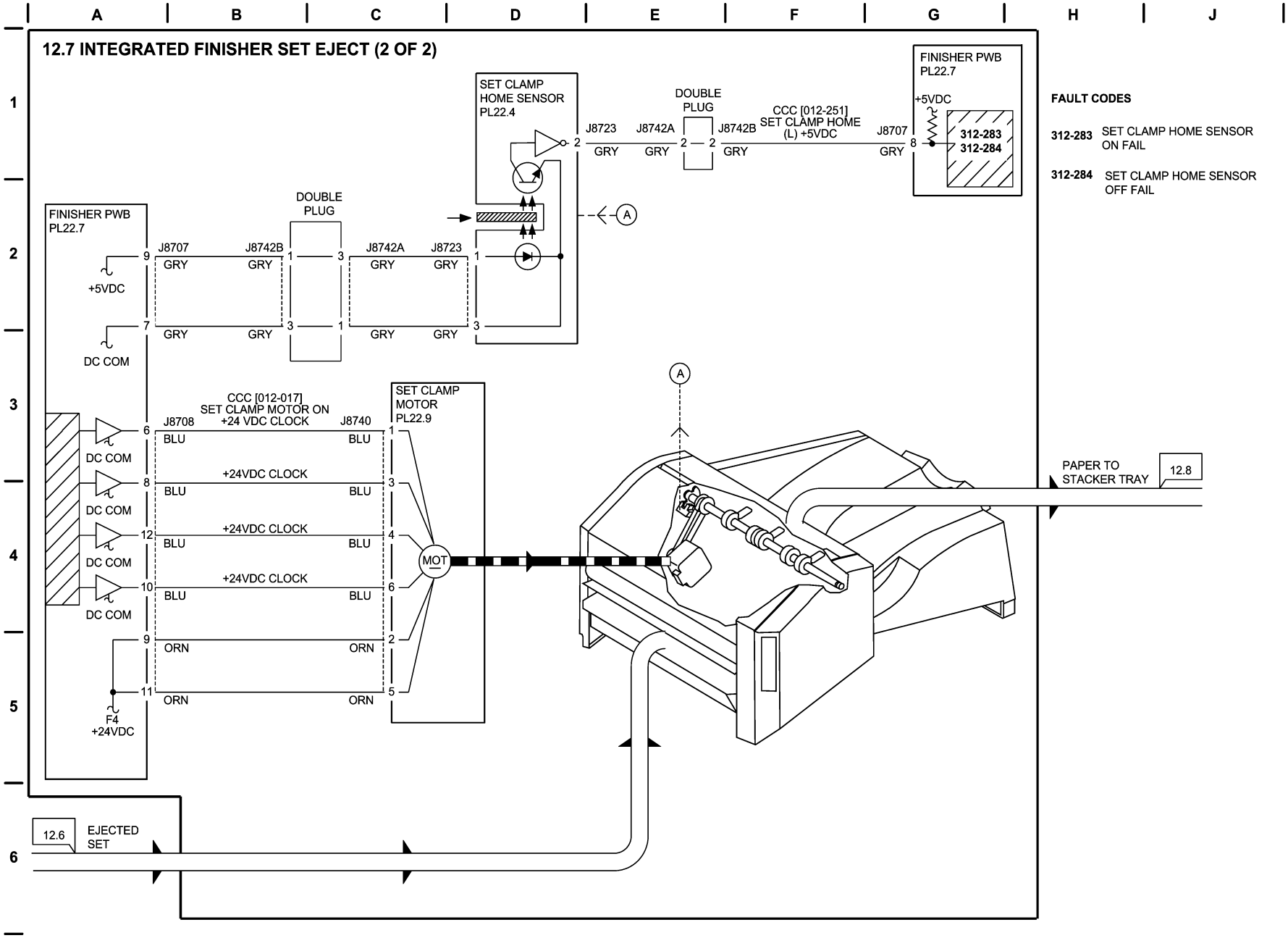

Figure 7 BSD 12.7 Integrated Finisher Set Eject (2 of 2)

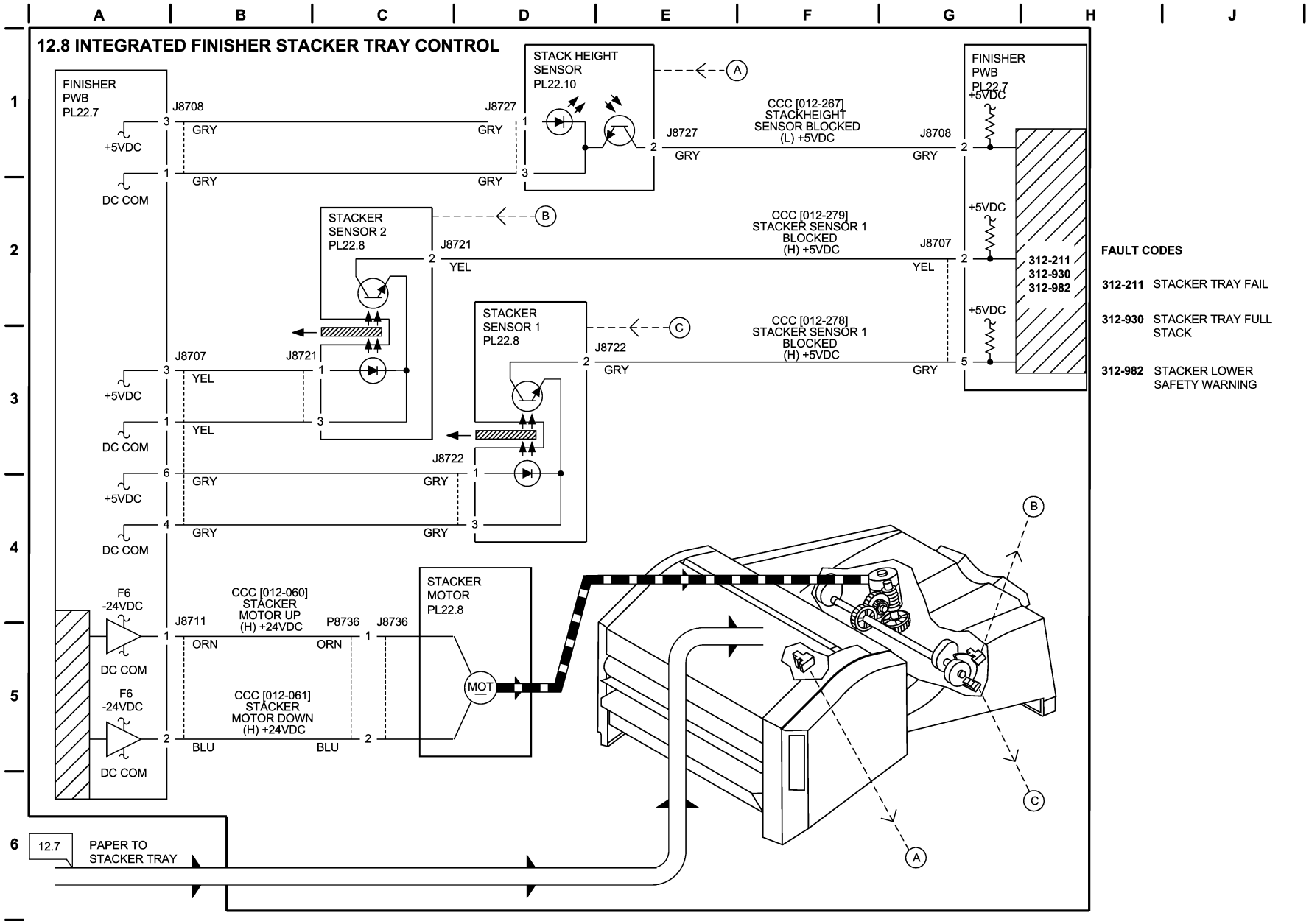

Figure 8 BSD 12.8 Integrated Finisher Stacker Tray Control

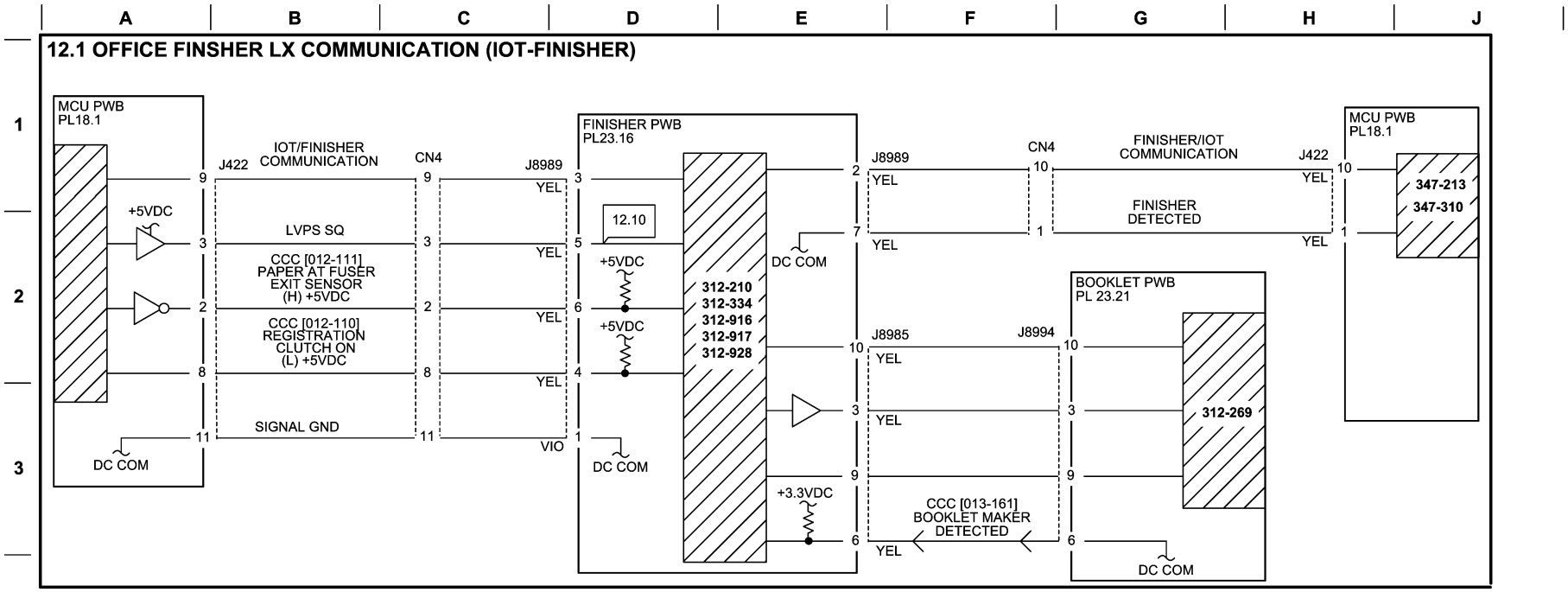

FAULT CODES

312-210	NVM ACCESS FAULT
312-269	BOOKLET SUB-CPU COMMUNICATIONS FAILURE
312-334	DOWNLOAD FAILURE
312-916	STOCK MIXED SIZES DETECT
312-917	STACKER TRAY STAPLE SET OVER COUNT
312-928	SCRATCH SHEET COMPILE
347-213	FINISHER TYPE MISMATCH
347-310	FINISHER COMMUNICATION FAULT

Figure 1 BSD 12.1 Office Finisher LX Communication (IOT-Finisher)

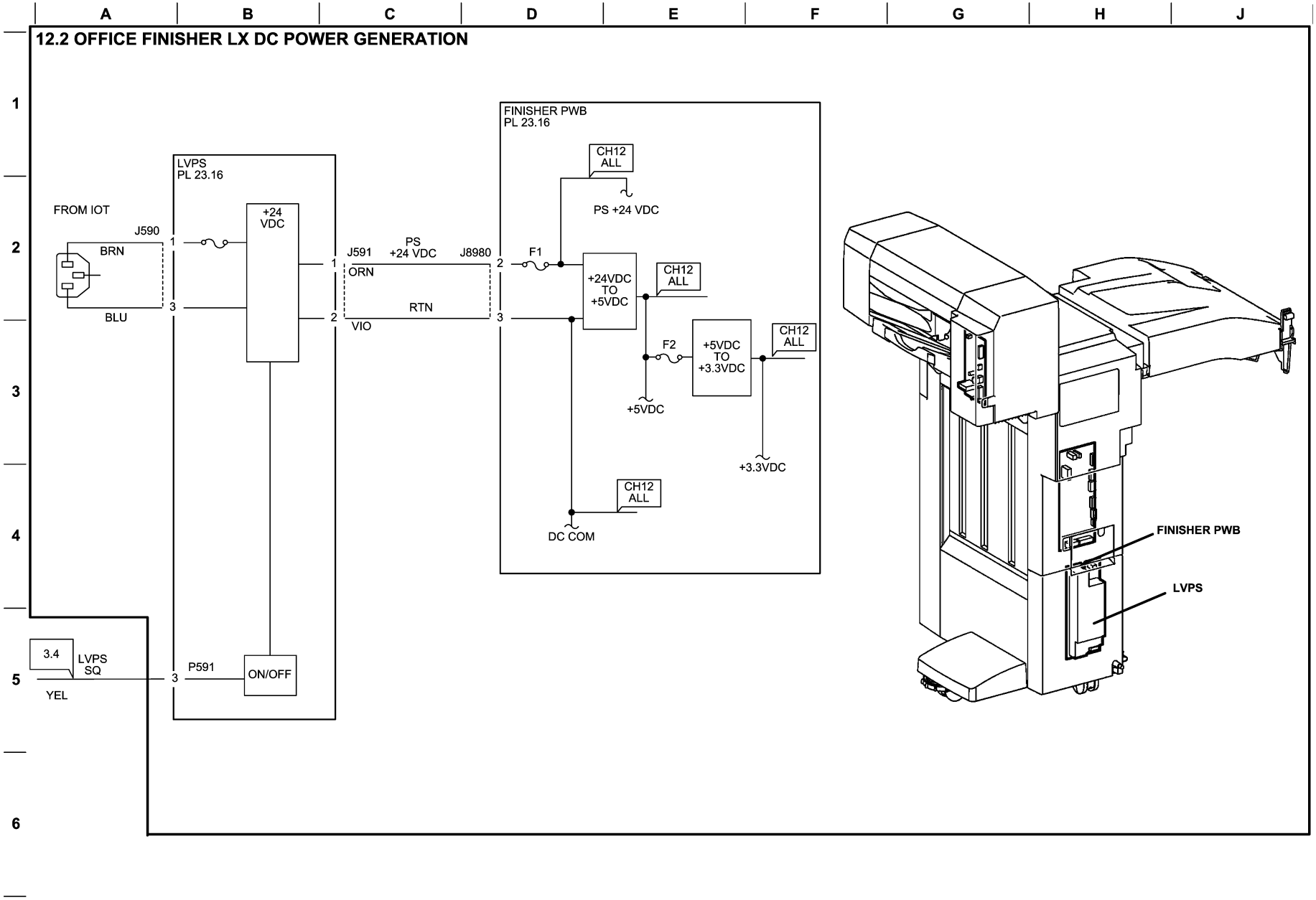

Figure 2 BSD 12.2 Office Finisher LX DC Power Generation

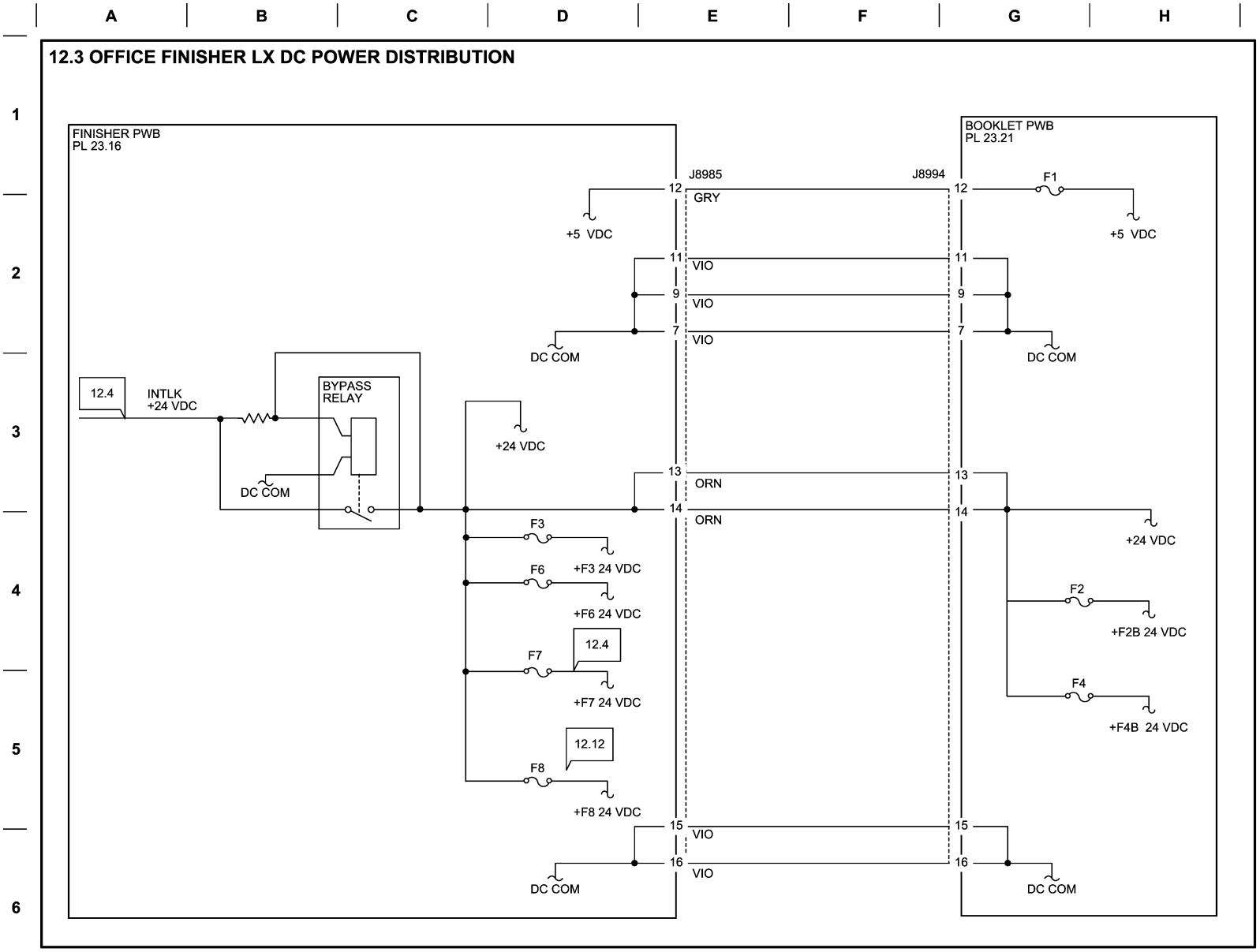

Figure 3 BSD 12.3 Office Finisher LX DC Power Distribution

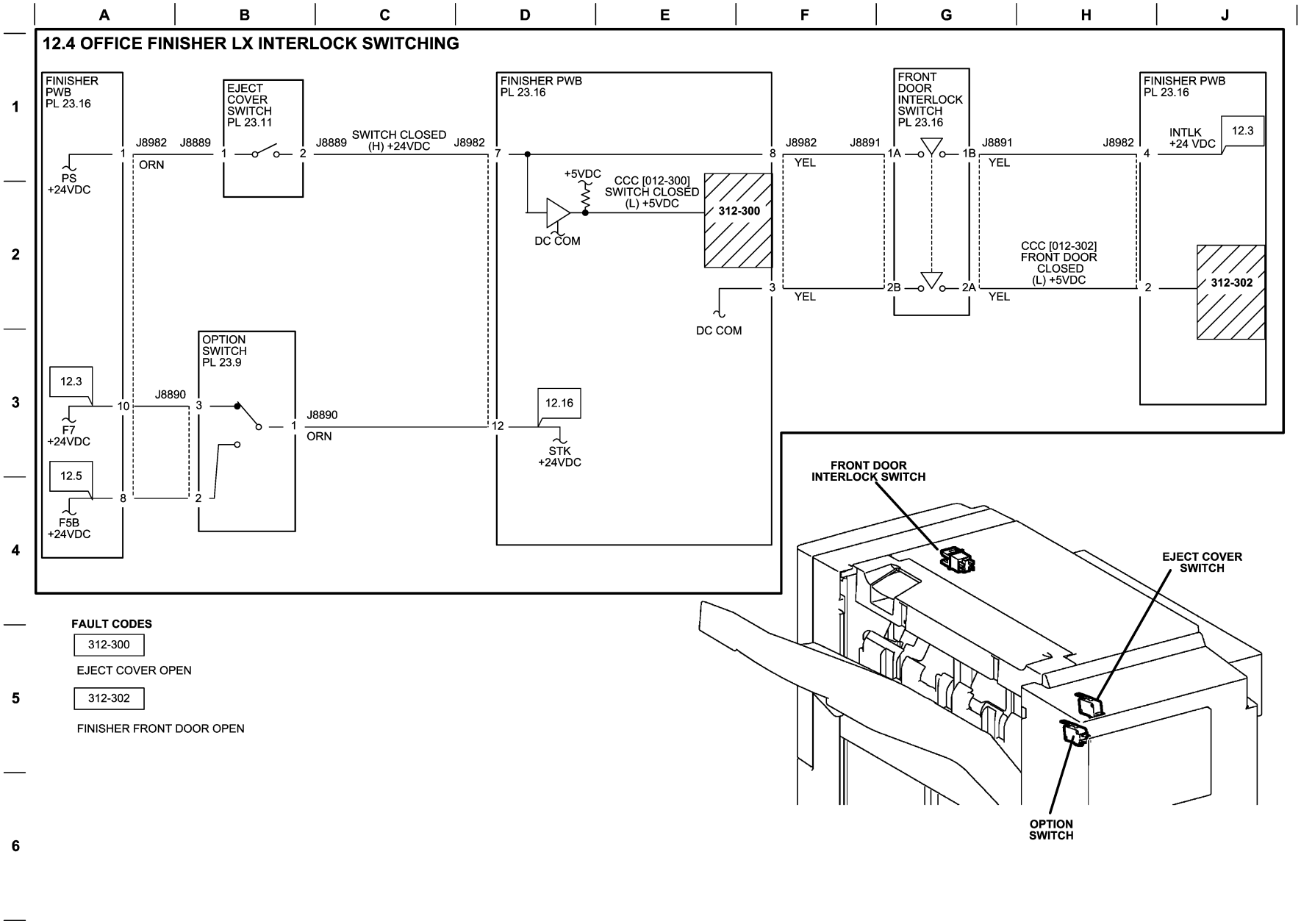

Figure 4 BSD 12.4 Office Finisher LX Interlock Switching

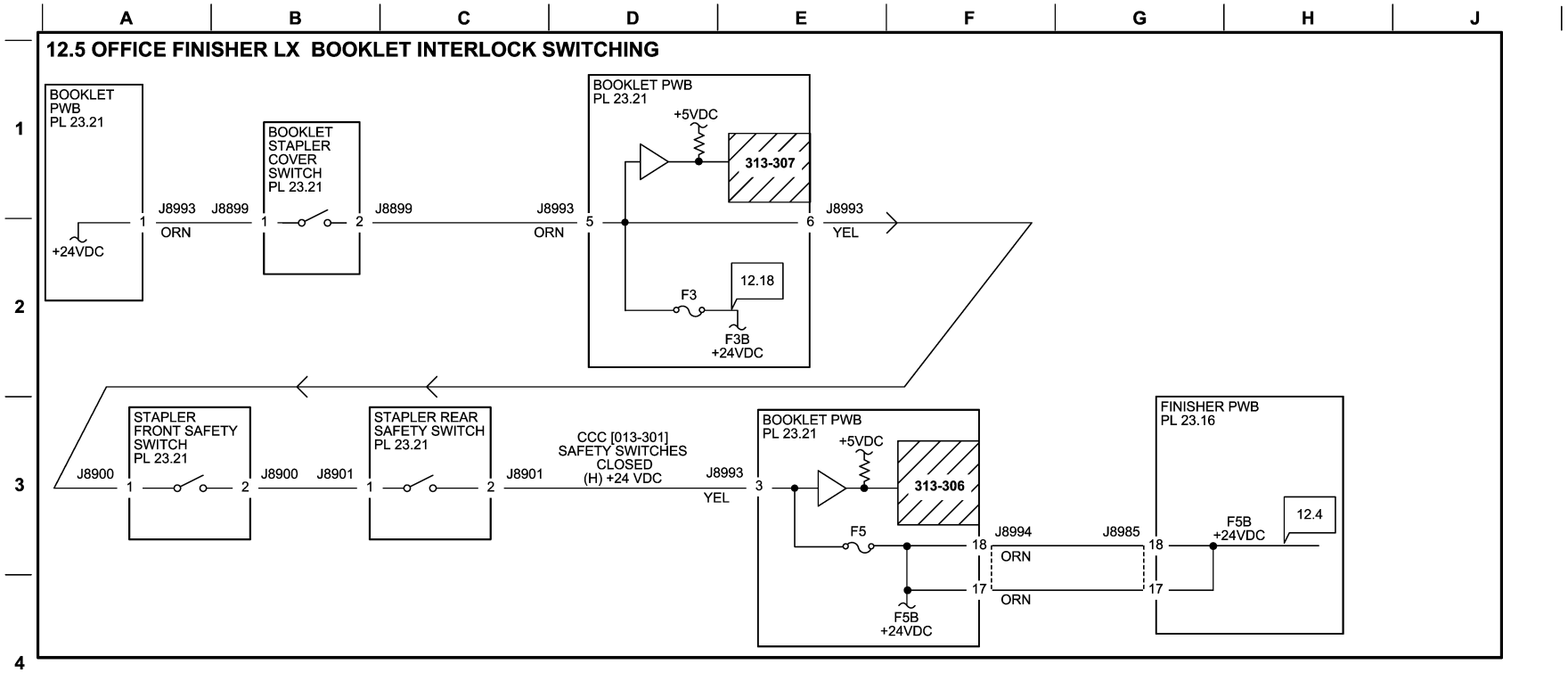

FAULT CODES

313-306

BOOKLET SAFETY SWITCH OPEN

313-307

BOOKLET COVER OPEN

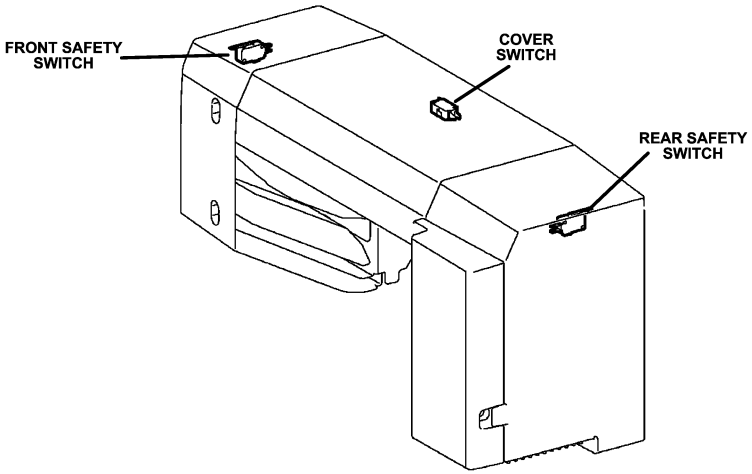

Figure 5 BSD 12.5 Office Finisher LX Booklet Interlock Switching

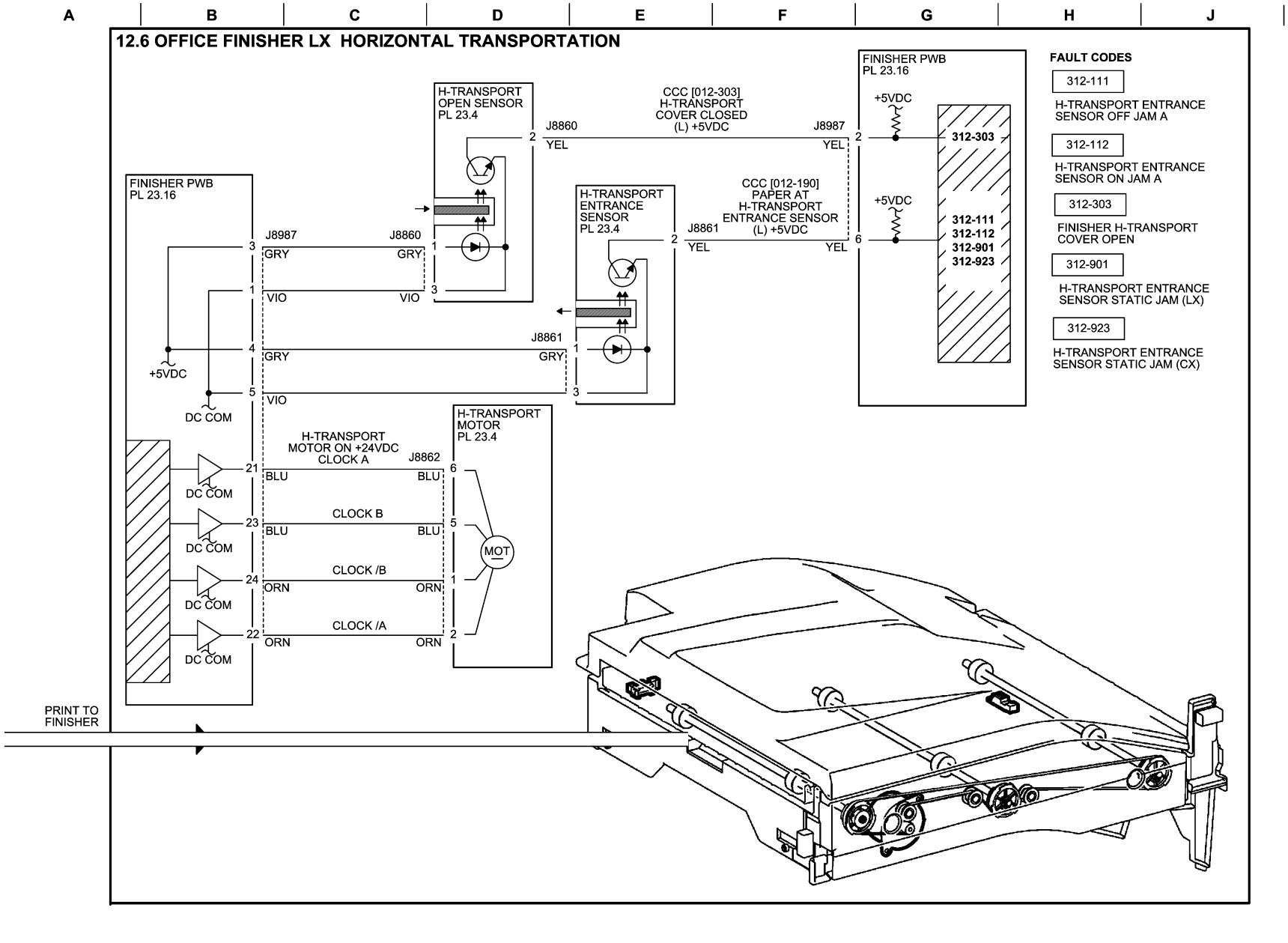

Figure 6 BSD 12.6 Office Finisher LX Horizontal Transportation

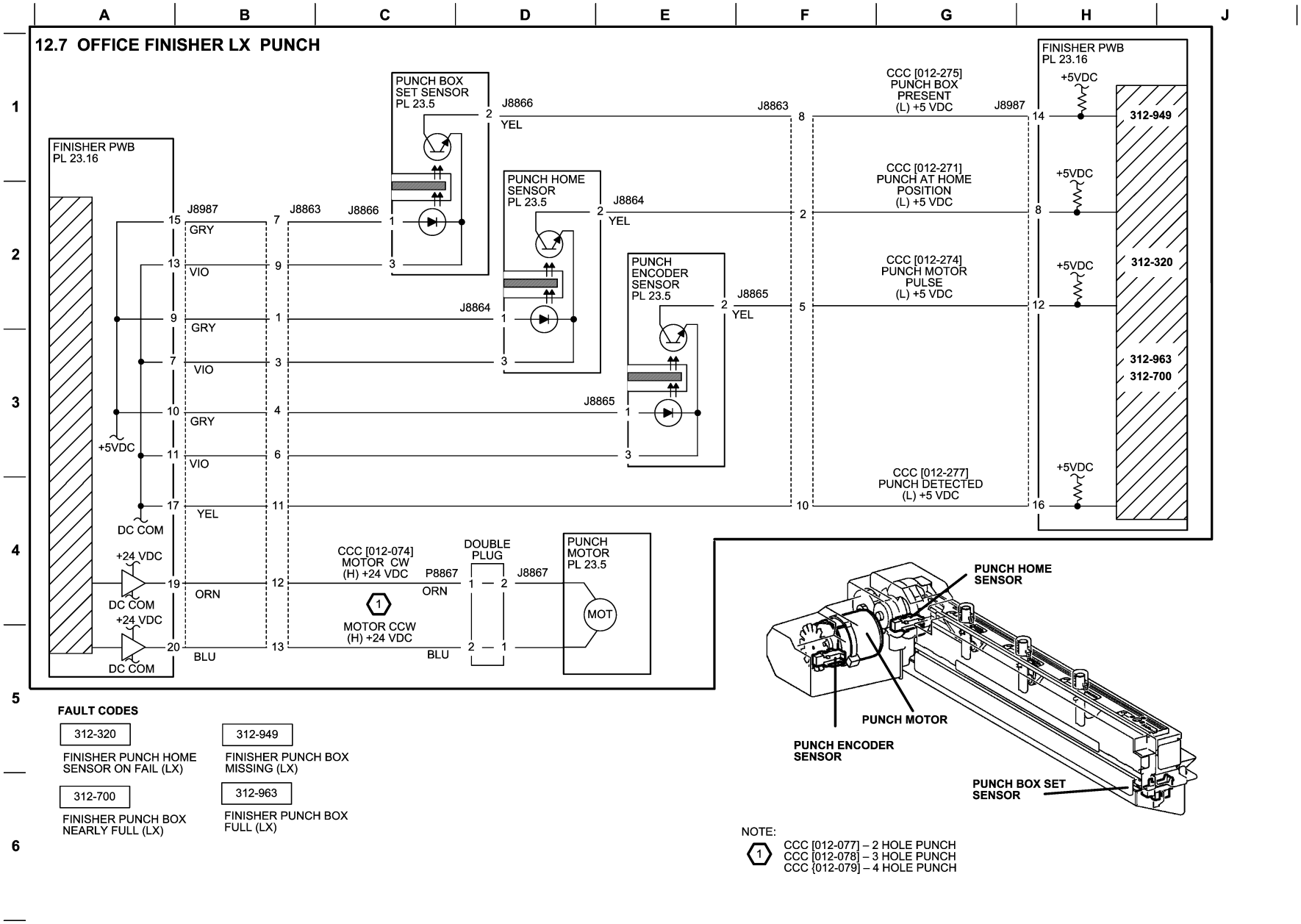

Figure 7 BSD 12.7 Office Finisher LX Punch

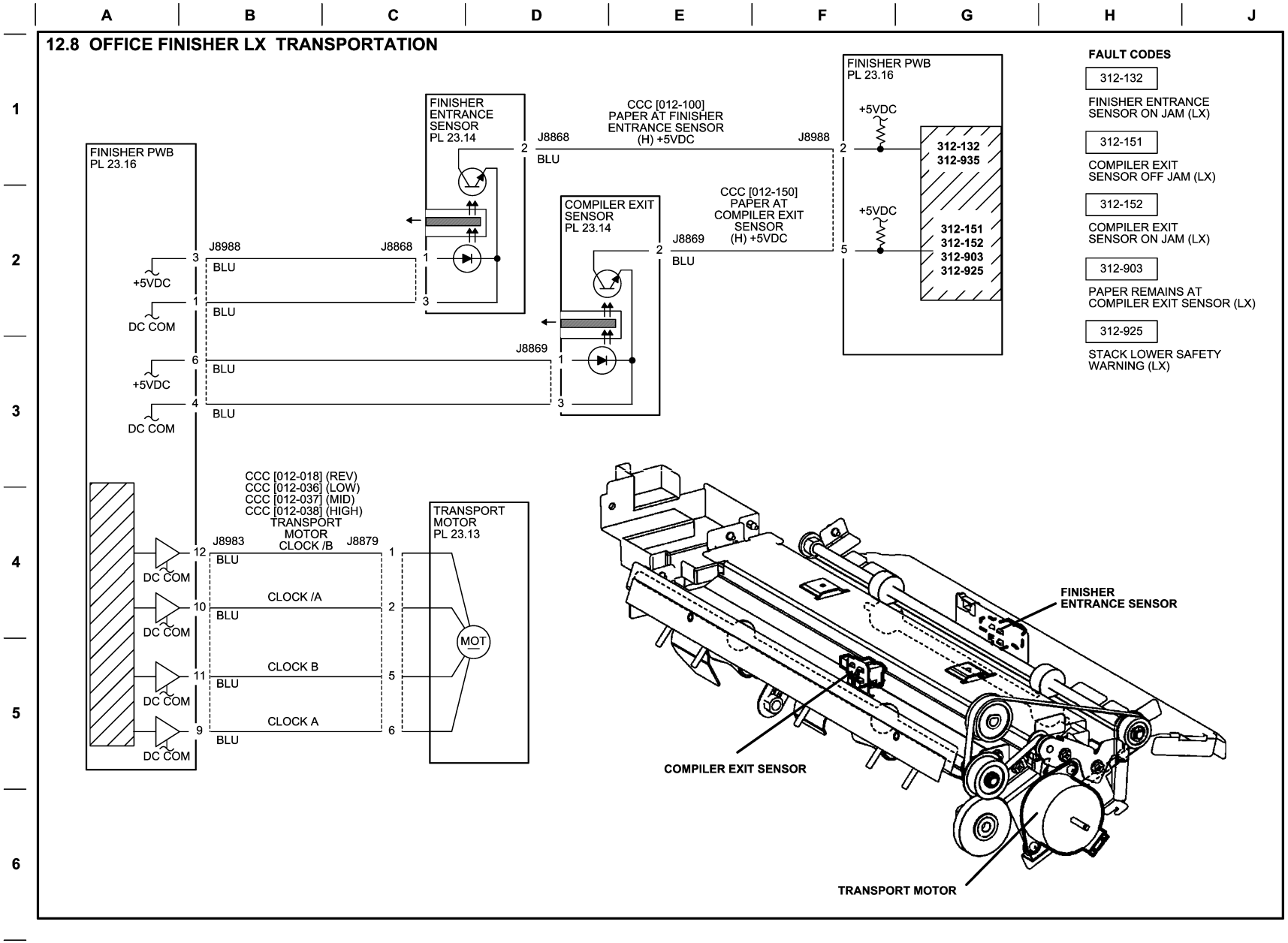

Figure 8 BSD 12.8 Office Finisher LX Transportation

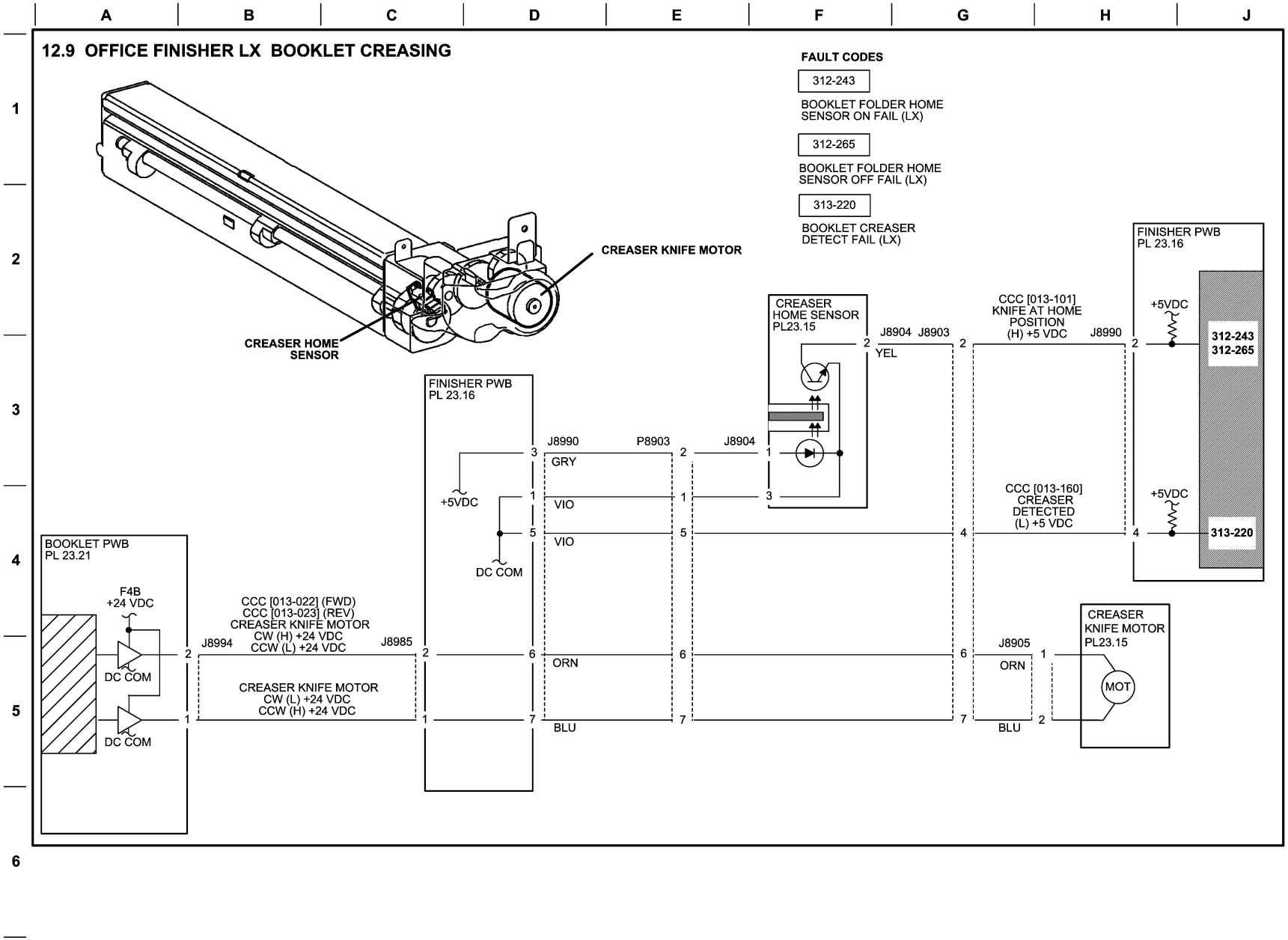

Figure 9 BSD 12.9 Office Finisher LX Creasing

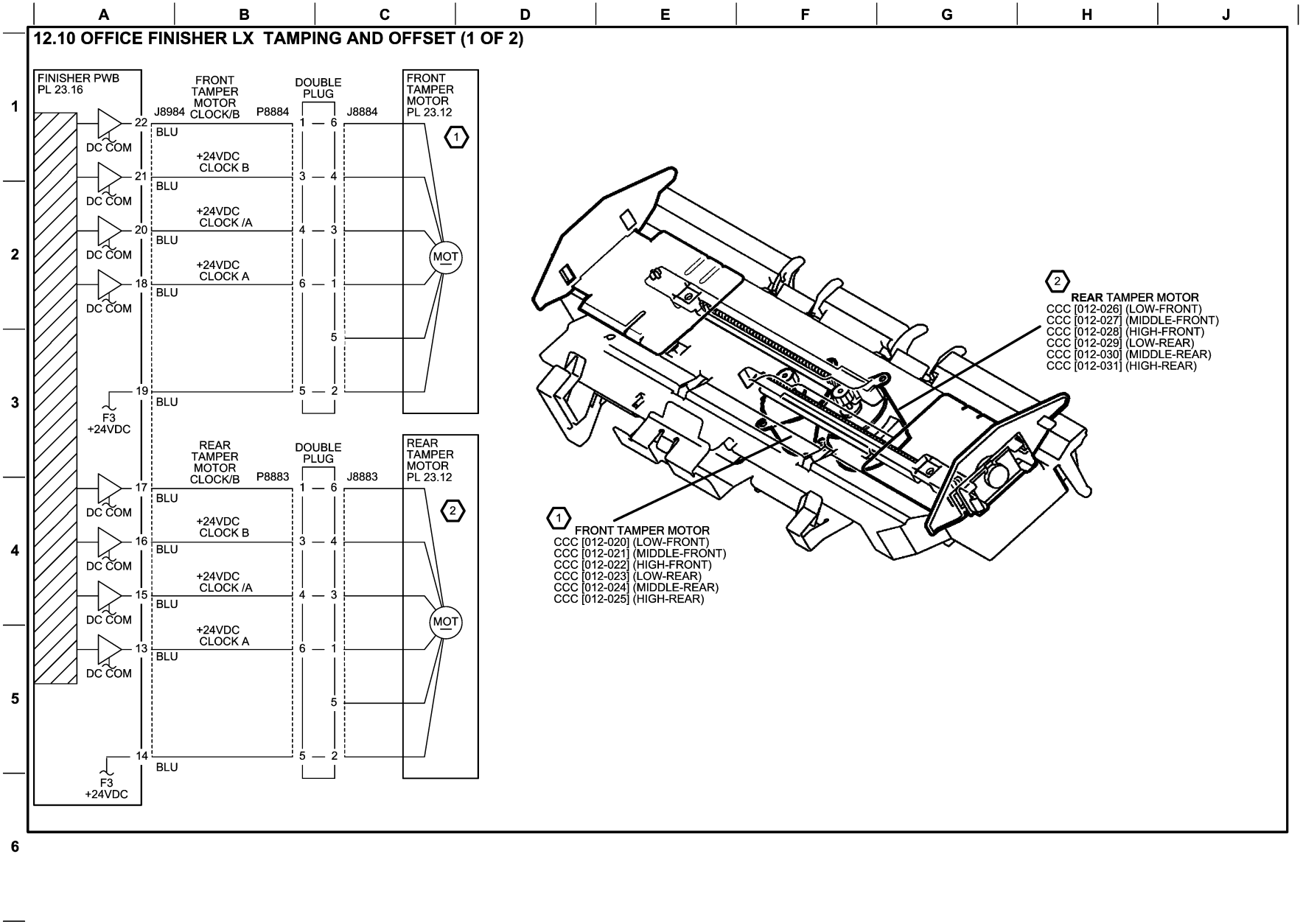

Figure 10 BSD 12.10 Office Finisher LX Tamping and Offset (1 of 2)

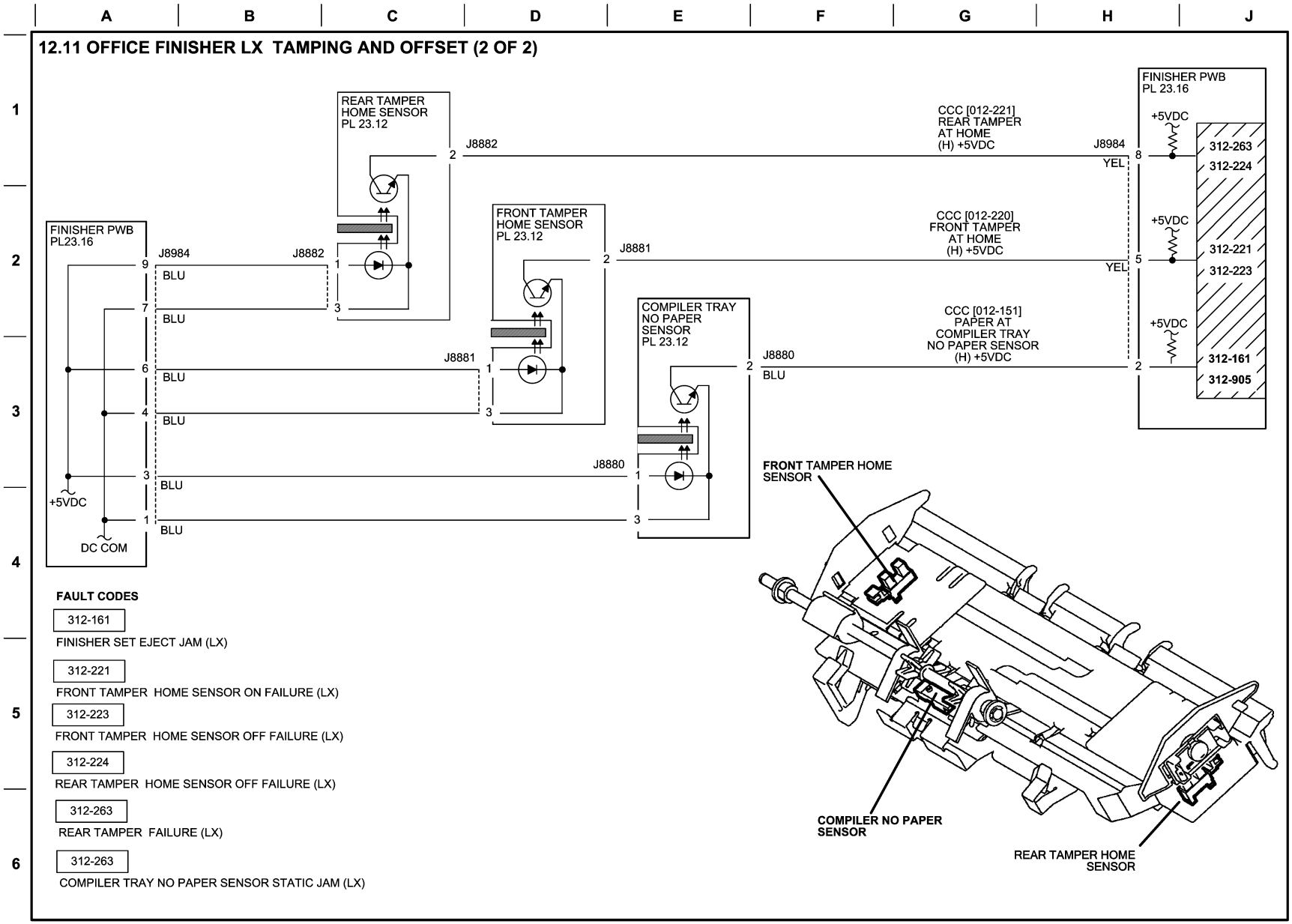

Figure 11 BSD 12.11 Office Finisher LX Tamping and Offset (2 of 2)

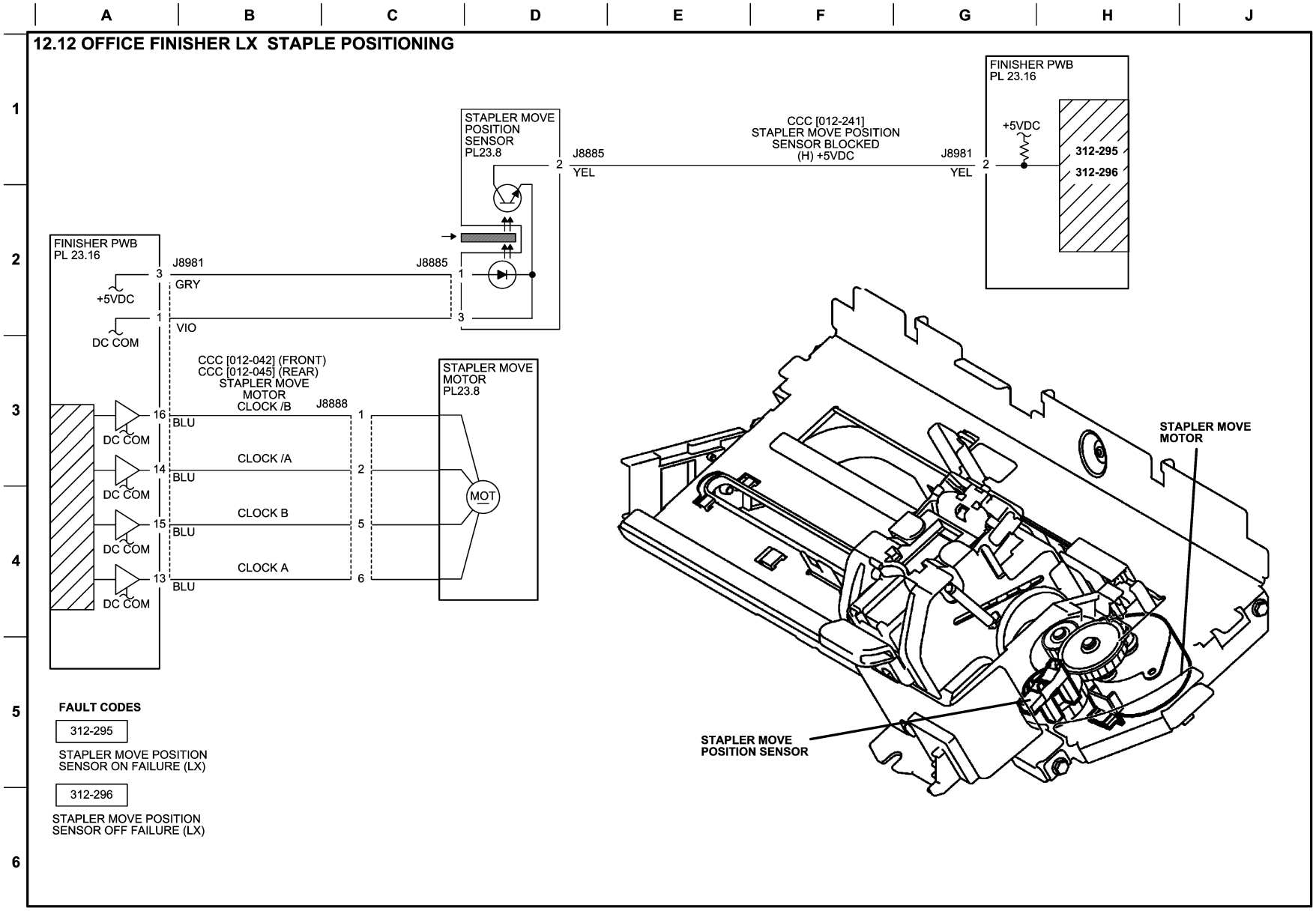

Figure 12 BSD 12.12 Office Finisher LX Staple Positioning

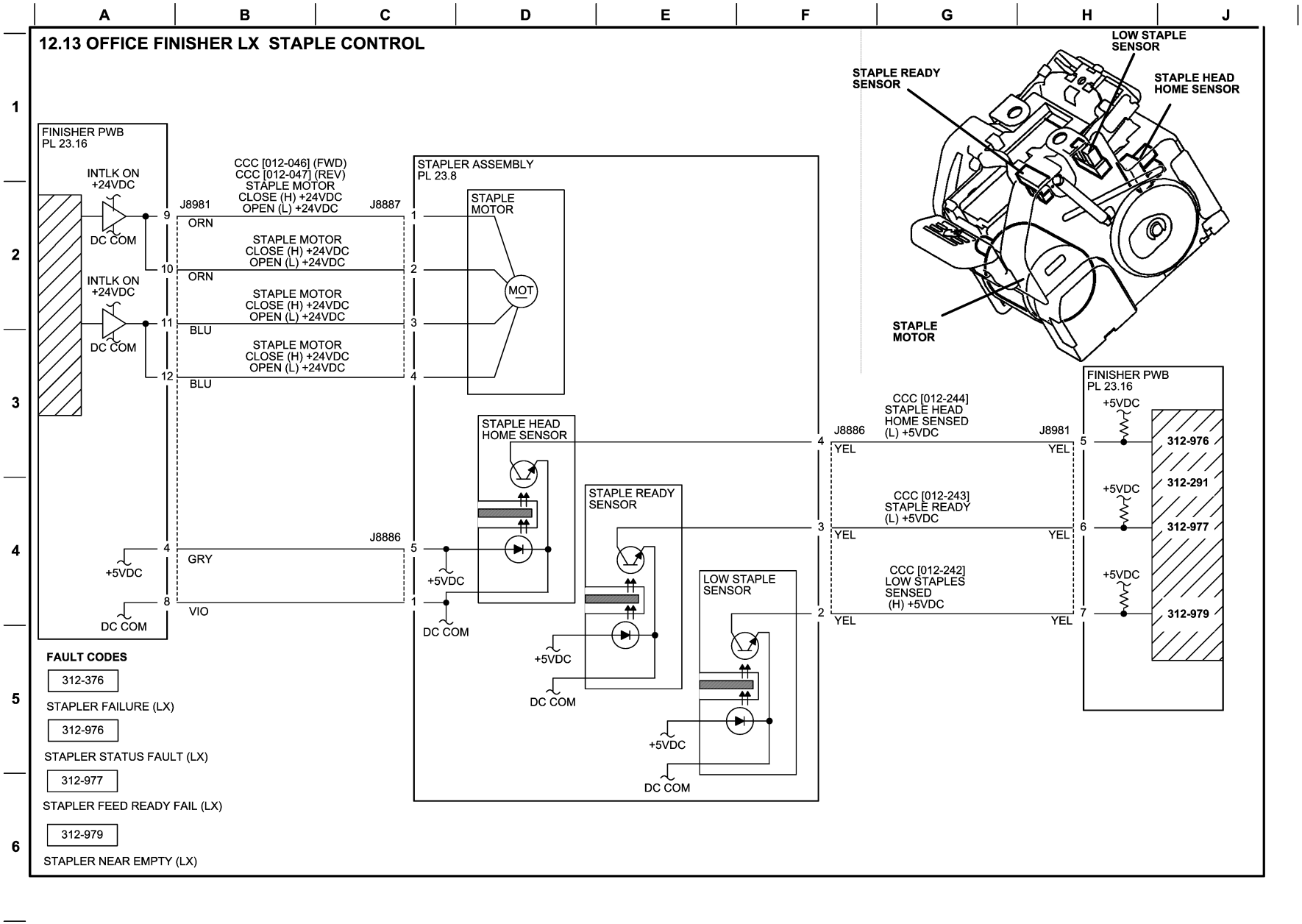

Figure 13 BSD 12.13 Office Finisher LX Staple Control

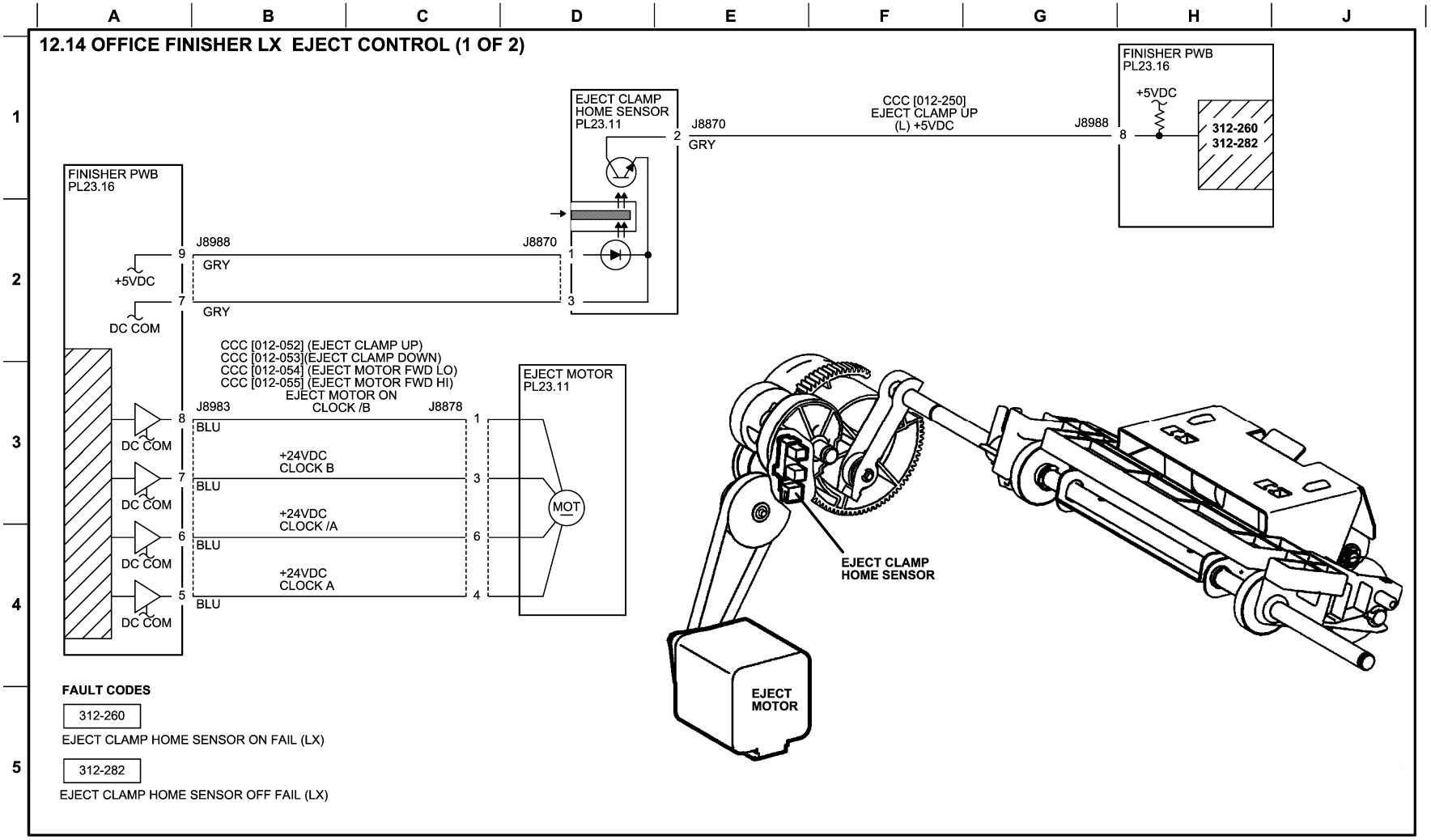

Figure 14 BSD 12.14 Office Finisher LX Eject Control (1 of 2)

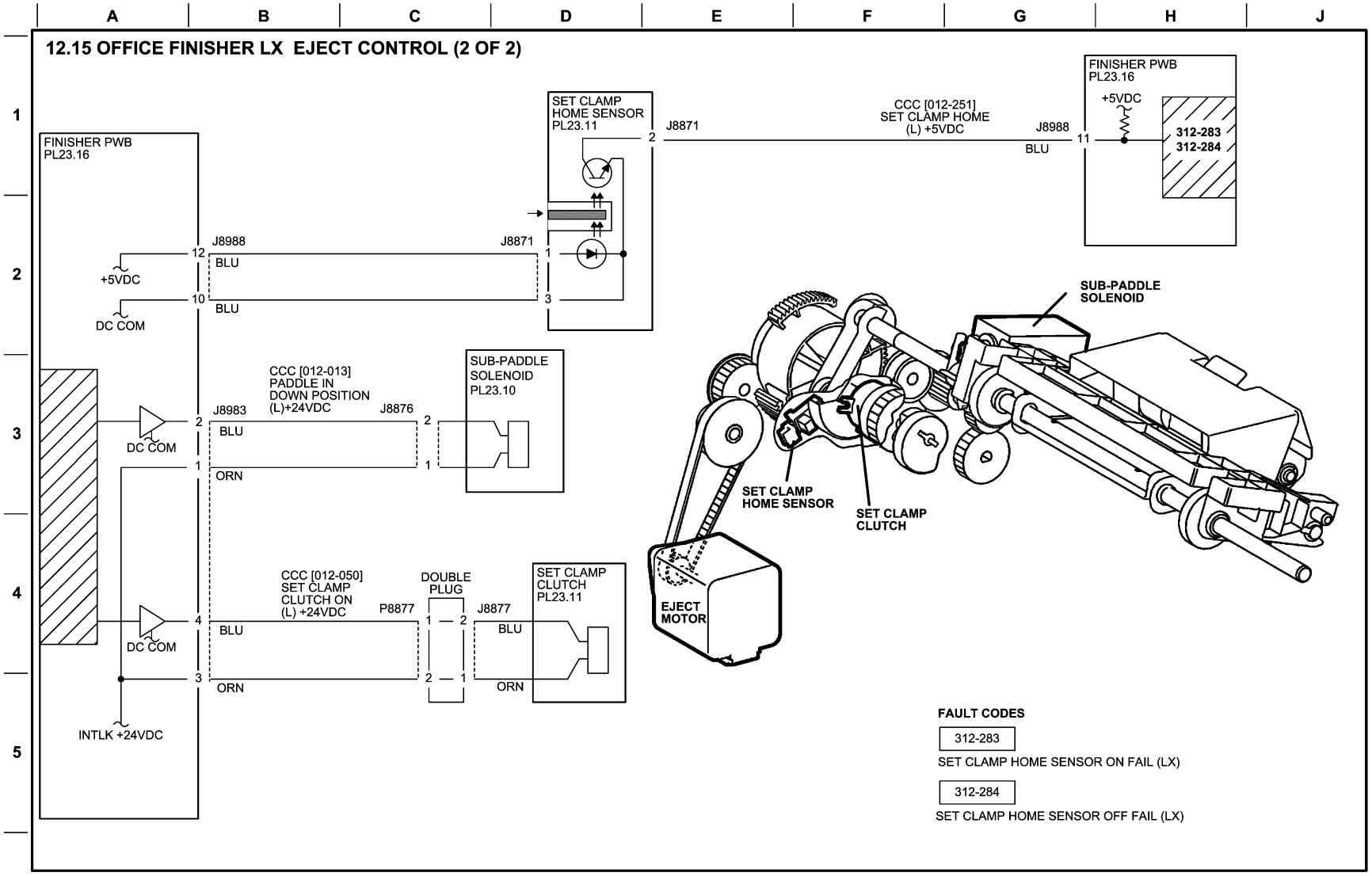

Figure 15 BSD 12.15 Office Finisher LX Eject Control (2 of 2)

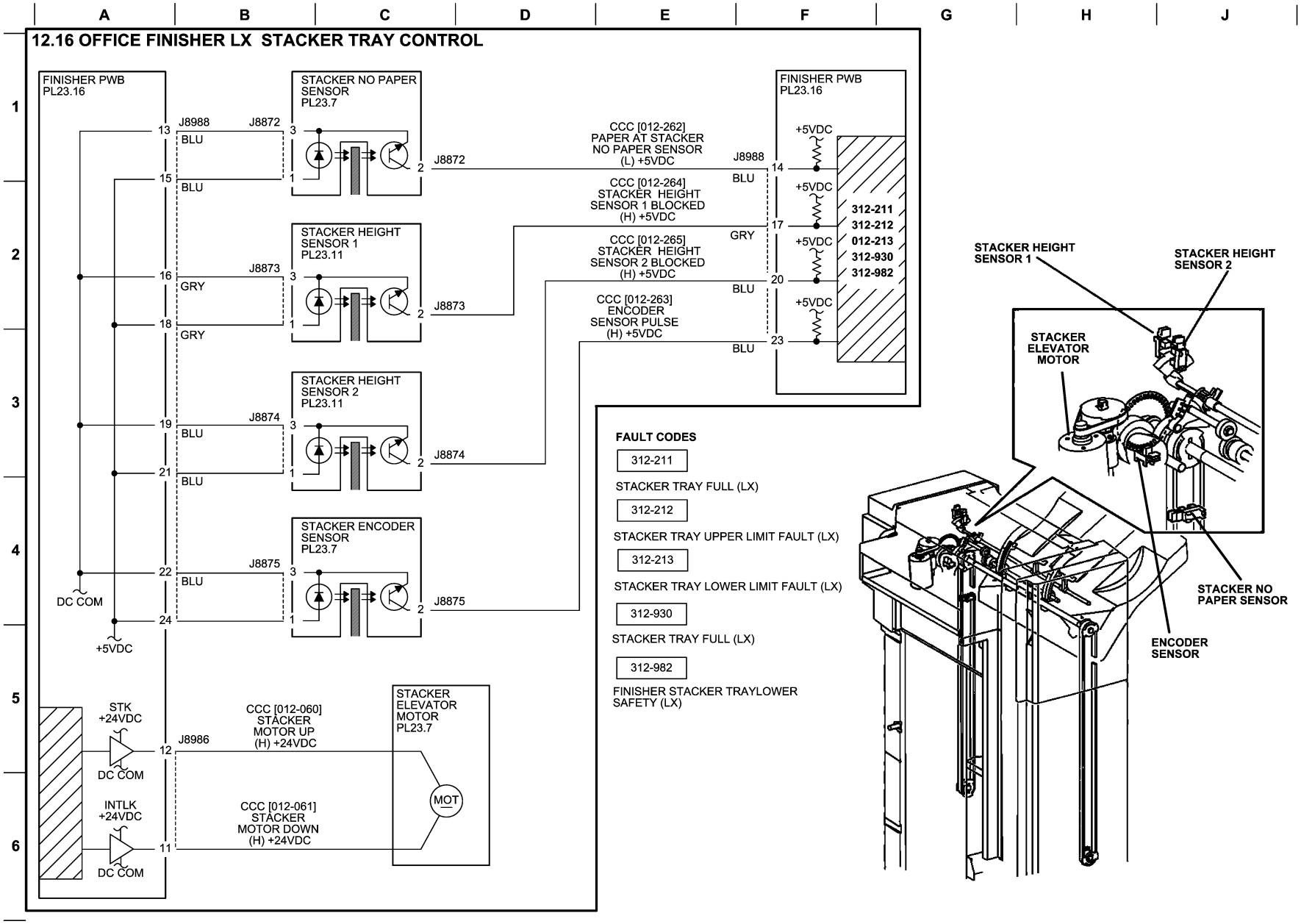

Figure 16 BSD 12.16 Office Finisher LX Stacker Tray Control

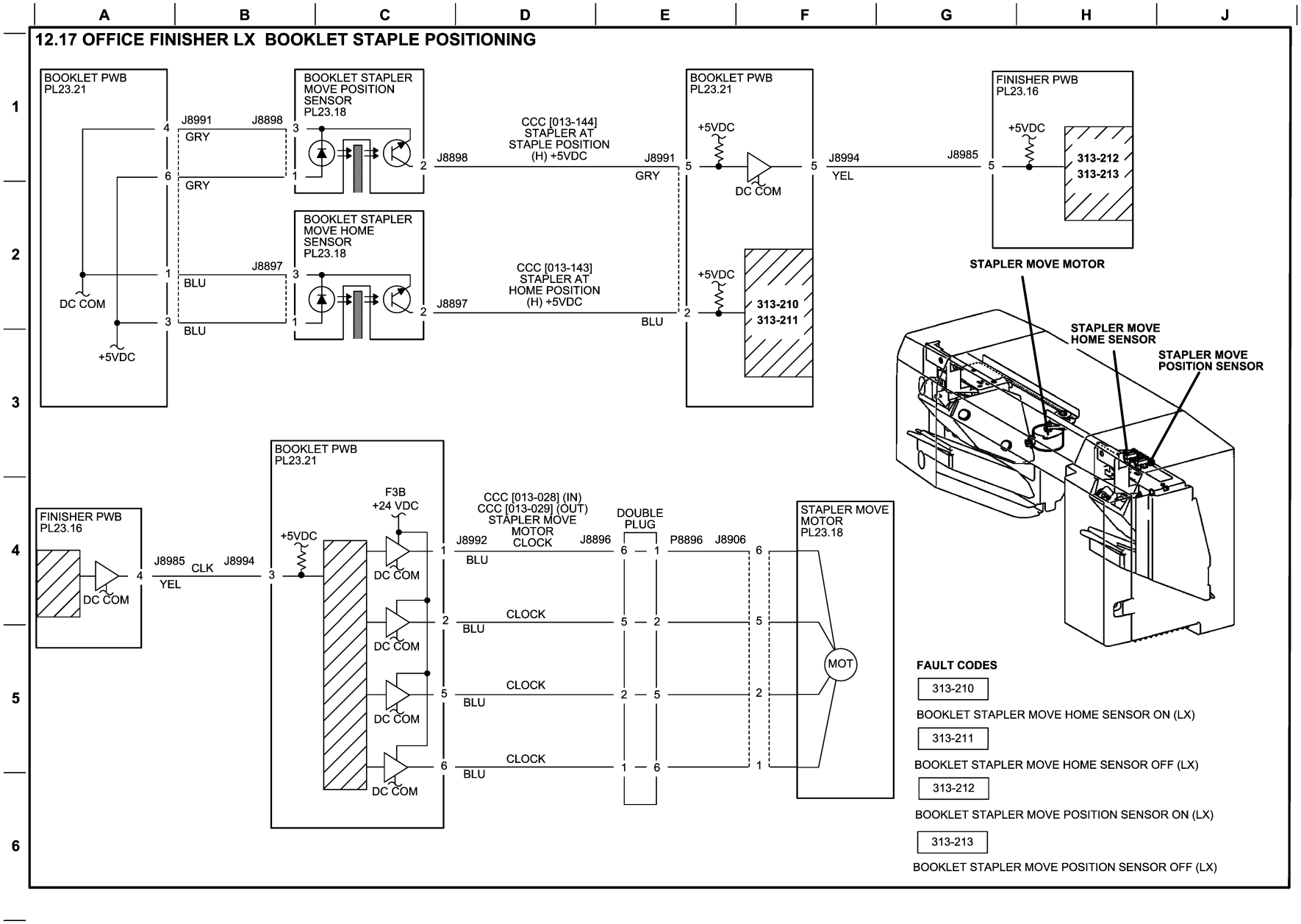

Figure 17 BSD 12.17 Office Finisher LX Booklet Staple Positioning

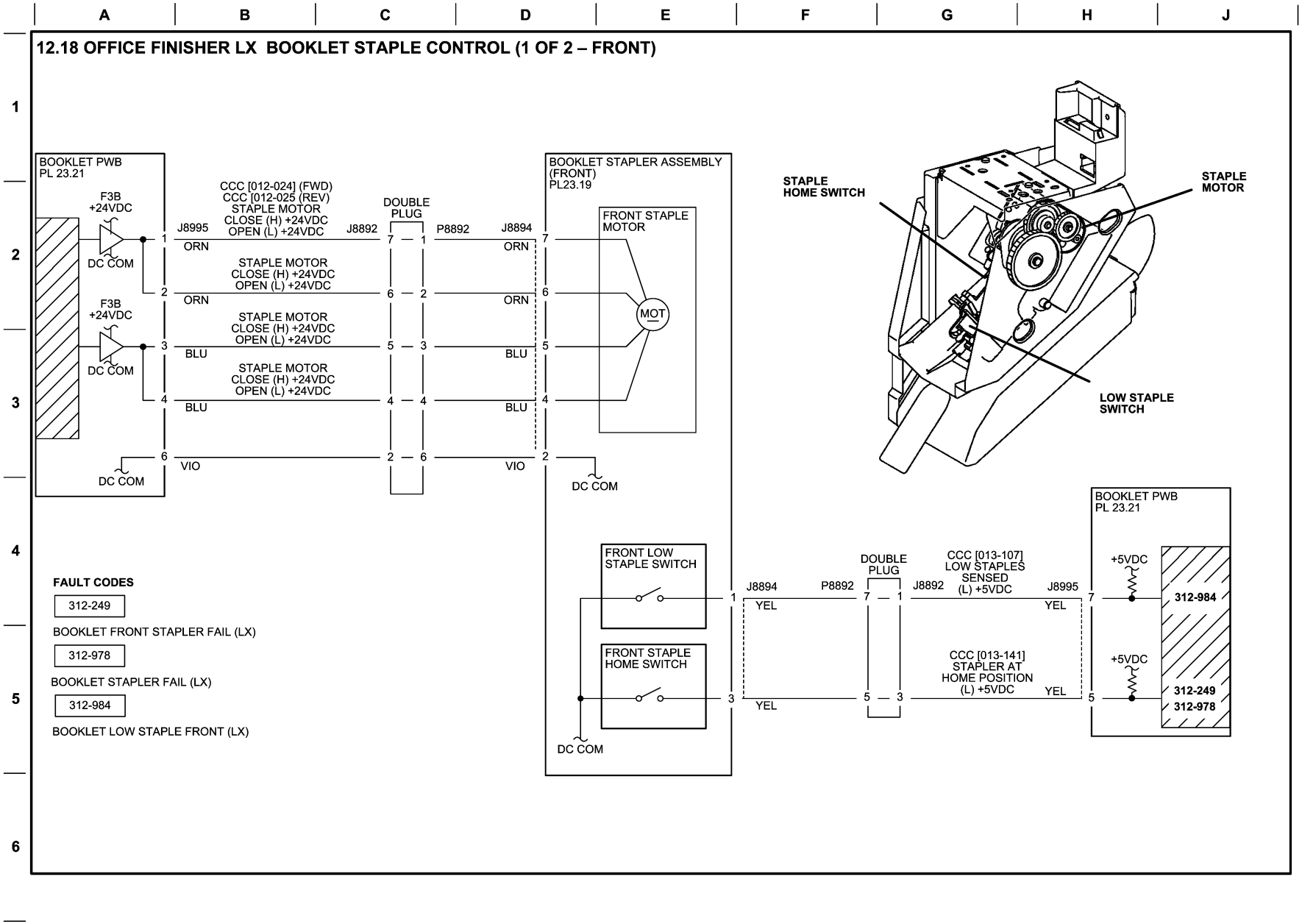

Figure 18 BSD 12.18 Office Finisher LX Booklet Staple Control (1 of 2 - Front)

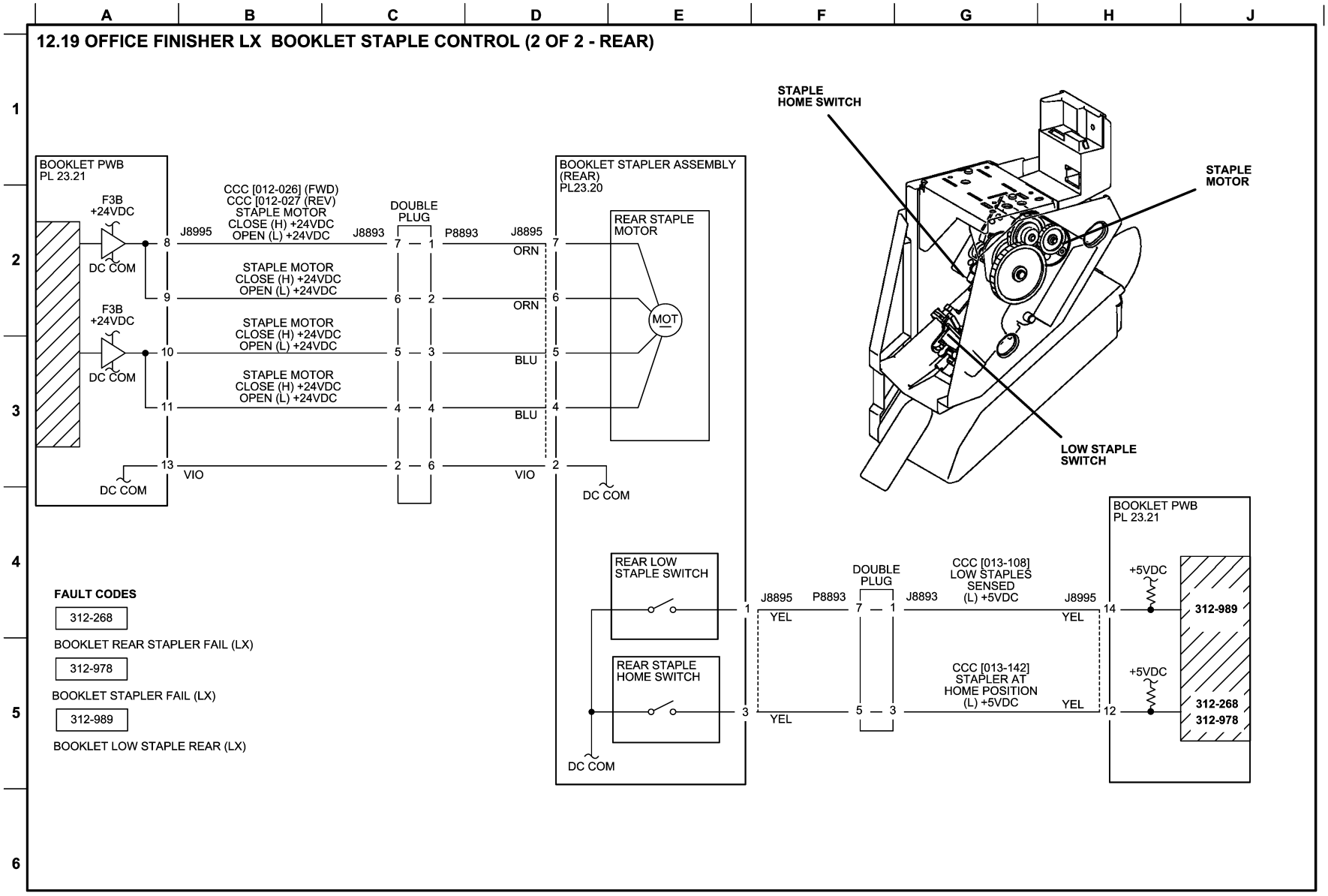

Figure 19 BSD 12.19 Office Finisher LX Booklet Staple Control (2 of 2 - Rear)

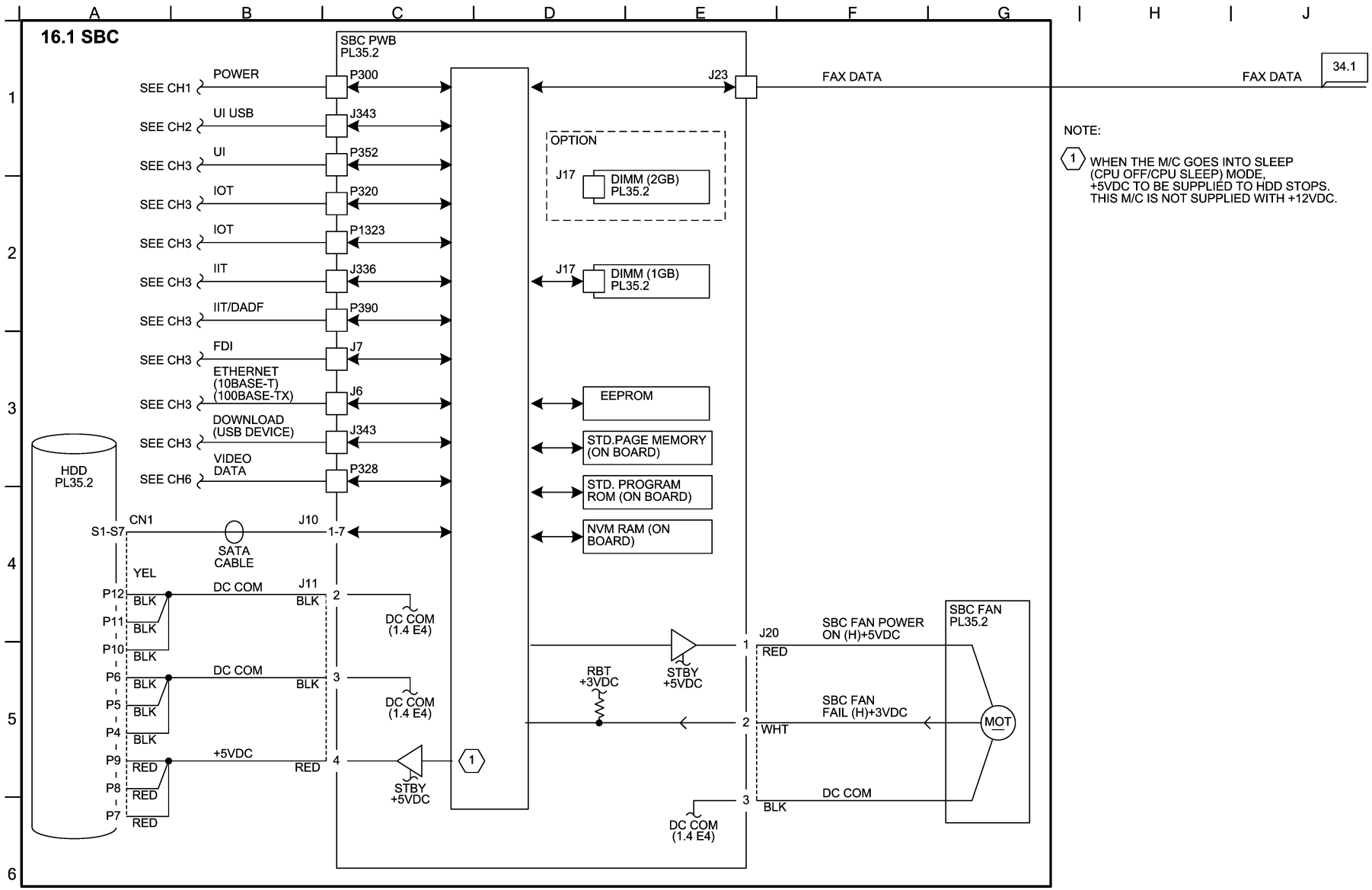

Figure 1 BSD 16.1 - SBC

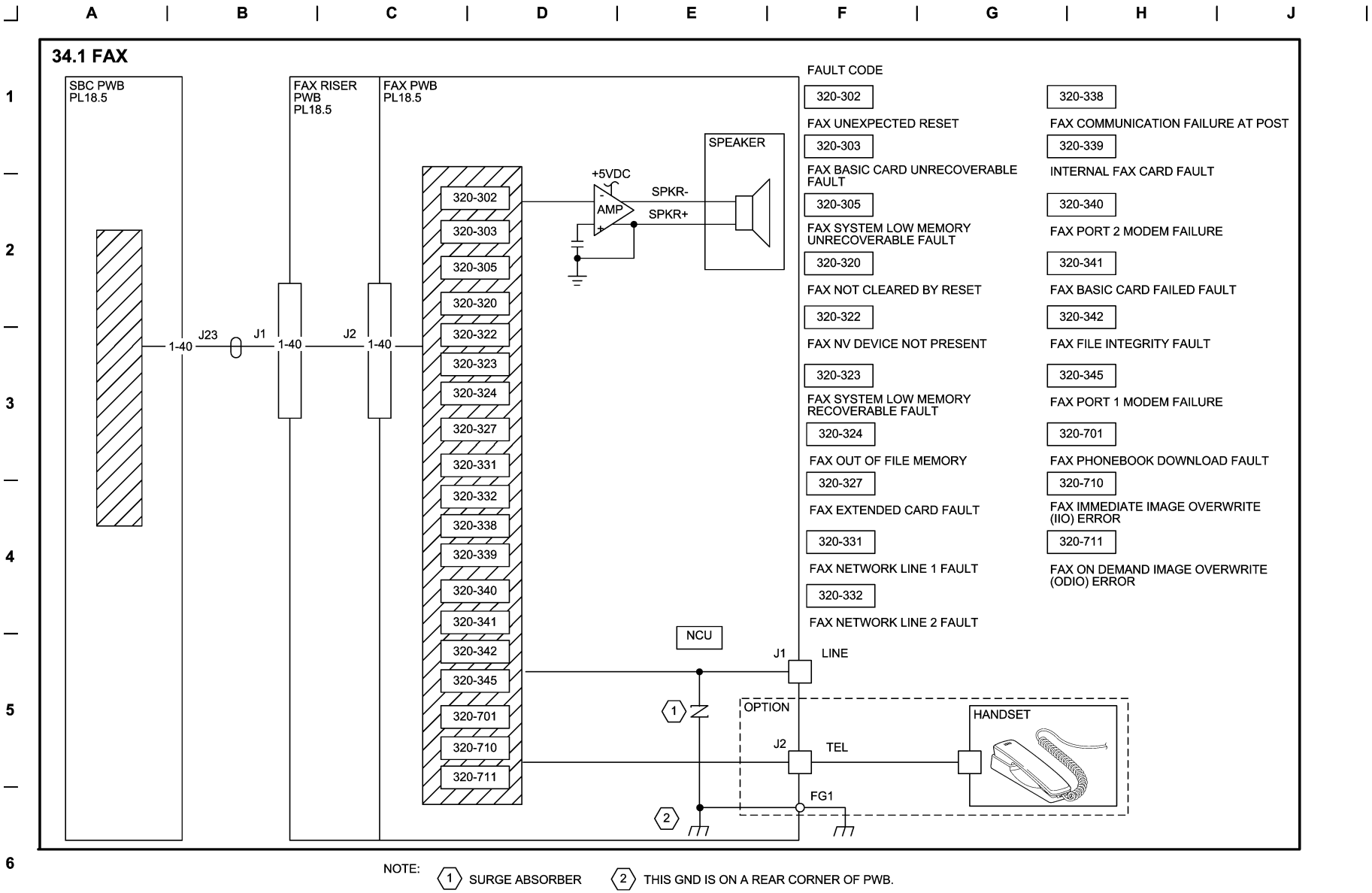

Figure 1 BSD 34.1 - FAX